DHCD, DBFR 2009 Code Change Process

May 6, 2009 Workgroup 3 (USBC/SFPC Technical Amendments) Meeting Agenda Package

CARRY OVER ISSUES FROM LAST WORKGROUP MEETING:

1. USBC/IPC – Appendix for gray water **(Page 5)**
2. USBC/IPC – FOG **(Page 11)**
3. USBC/IMC – Tamper-resistant caps for refrigerant access ports **(Page 15)**
4. USBC/IMC – Commercial kitchen hoods **(Page 16)**
5. USBC/IBC – Occupant elevators; add addenda to standard; elevator lobby correlation **(Page 17)**
6. USBC/IBC – Exit stair width **(Page 27)**
7. USBC/IBC – Exit markings **(Page 29)**
8. USBC/IBC – Stenciling fire-rated assemblies **(Page 31)**
9. USBC/IBC – Standpipe residual pressure for NFPA 13R **(Page 34)**
10. USBC/IEBC – Type A and B units in renovation work **(Page 35)**
11. USBC/VMC – Water damaged electrical systems **(Page 42)**
12. USBC/IFGC – Portable fire pits **(Page 46)**
13. USBC/IBC – Swimming pools and swimming pool drains **(Page 49)**

USBC TECHNICAL ISSUES FROM WORKGROUP 2:

1. USBC/NEC – Door swing in electrical control rooms **(Page 54)**
2. USBC/IBC – Sprinkler thresholds in Group A and Group B ambulatory health care facilities **(Page 57)**

3. USBC/IBC – Sprinkler thresholds in Group E and Group M display and sale of upholstered furniture **(Page 59)**

4. USBC/IPMC – Room sizes for infants **(Page 61)**

5. USBC/IBC – CO alarms **(no handout)**

NEW ISSUES/PROPOSALS

1. USBC/IBC – Group I-3 smoke barriers **(Page 62)**

2. USBC/IBC – Egress for stages **(Page 65)**

3. USBC/IBC – Accessible means of egress **(Page 67)**

4. USBC/IBC – Accessibility for raised areas in churches **(Page 68)**

5. USBC/IBC – Machine-room-less elevator equipment closets **(Page 69)**

Board of Housing and Community Development (BHCD), Fire Services Board (FSB) and BHCD's Codes and Standards Committee
2009 Regulatory Action and Meeting Dates

These dates are subject to change.

January 26, 2009: BHCD presented with 2009 regulatory schedule.

March 23, 2009: BHCD approves Notice of Intended Regulatory Action (NOIRA).

May 18, 2009: BHCD's Codes and Standards Committee will meet from approximately 11:00 a.m. to 4:00 p.m. at DHCD, 1st floor board room (right after the BHCD board meeting that will be from10:00 a.m. to 11:00p.m.). Four Work Groups, advisory committees, Fire Services Code Committee and associations should have identified their 2009 code changes and gained consensus where possible.

June 22, 2009: BHCD's Codes and Standards Committee will meet to review non-consensus items at DHCD, 1st floor board room from 9:30 a.m. to 4:00 p.m.

July 27, 2009: BHCD will meet at VDHA, 4224 Cox Road (Innsbrook), 1st floor. BHCD and FSB Public Hearing at 9:30 a.m., Codes and Standards Committee following the hearing from approximately 11:00 a.m. to 12:15 p.m. and BHCD Board meeting at 1:00 p.m. to approve the 2009 proposed regulations.

August, September, and October, 2009: No meetings during this time as regulations are approved for publication and 60 days comment period.

November 16th or December 21st, 2009: BHCD's Codes and Standards Committee will meet to review public comments on the proposed regulations, carry-over code changes and new code changes.

January 18th or 25th, 2010: BHCD and FSB will hold a public hearing on the proposed regulations.

March 1, 2010: Deadline for new code changes.

May 17, 2010: BHCD's Codes and Standards Committee will meet to consider all code changes not approved, public comments or any new code changes and a final review of the regulations and approval to submit for the BHCD to approve.

June 21, 2010: BHCD approve final regulations with input from the FSB on the SFPC. Codes and Standards Committee will have a short meeting prior to the BHCD meeting.

September 30, 2010: Effective date of final regulations if approved by the OAG and Governor's Office.

(Updated March 27, 2009)

2009 BHCD Regulatory Cycle Schedule and Meetings for the USBC, SFPC, VADR, VCS, MHSR and the IBSR

March 19, 2009: Work Group 2 - Administrative and Selected Technical Issues for the USBC, SFPC, MHSR, IBSR, VADR and VCS Regulations meets.

March 23, 2009: BHCD approves the publication of the NOIRA's for each regulation.

March 26, 2009: Work Group 1 - USBC Energy Code Requirements meets.

April 2, 2009: Work Group 3 - USBC/SFPC Technical Amendments meets.

April 9, 2009: Work Group 4 - International Residential Code meets.

April 23, 2009: Work Group 1 - USBC Energy Code Requirements meets.

April 30, 2009: Work Group 2 - Administrative and Selected Technical Issues for the USBC, SFPC, MHSR, IBSR, VADR and VCS Regulations meets.

May 6, 2009: Work Group 3 - USBC/SFPC Technical Amendments meets.

May 13, 2009: Work Group 4 - International Residential Code meets.

May 18, 2009: BHCD's Codes and Standards Committee meets - 1st floor board room at DHCD from approximately 11:00 to 4:00 (following the regular scheduled BHCD meeting).

June 22, 2009: BHCD's Codes and Standards Committee meets 1st floor board room at DHCD from 9:30 to 4:00.

July 27, 2009: BHCD and Fire Services Board will hold a public hearing at 9:30 a.m. The Codes and Standards Committee will meet from approximately 11:00 to 12:15. The BHCD will meet at 1:00 to approve the draft regulations. The meetings will be held at VDHA in Innsbrook at 4224 Cox Road, 1st floor.

August to October, 2009: 60 day public comment period for the proposed USBC, SFPC and related regulations.

November 16th or December 21st, 2009: BHCD's Codes and Standards Committee meets to consider public comments, carry-over code changes from the Work Groups 1-4 meetings and any new code changes.

January 18th or 25th, 2010: BHCD and Fire Service Board will hold a second public hearing.

March 1, 2010: Deadline for 2009 code changes.

May 17, 2010: BHCD's Codes and Standards Committee meets to consider all remaining code changes and approve the final regulations for submission to the full BHCD.

June 21, 2010: BHCD approve final regulations with input from the FSB.

Effective Date: September 30, 2010.

(Updated March 27, 2009)

APPENDIX C

GRAY WATER RECYCLING SYSTEMS

The provisions contained in this appendix are not mandatory unless specifically referenced in the adopting ordinance.

Note: Section 301.3 of this code requires all plumbing fixtures that receive water or waste to discharge to the sanitary drainage system of the structure. In order to allow for the utilization of a gray water system, Section 301.3 should be revised to read as follows:

301.3 Connections to drainage system. All plumbing fixtures, drains, appurtenances and appliances used to receive or discharge liquid wastes or sewage shall be directly connected to the sanitary drainage system of the building or premises, in accordance with the requirements of this code. This section shall not be construed to prevent indirect waste systems required by Chapter 8.

Exception: Bathtubs, showers, lavatories, clothes washers and laundry trays shall not be required to discharge to the sanitary drainage system where such fixtures discharge to an *approved* gray water system for flushing of water closets and urinals or for subsurface landscape irrigation.

SECTION C101
GENERAL

C101.1 Scope. The provisions of this appendix shall govern the materials, design, construction and installation of gray water systems for flushing of water closets and urinals and for subsurface landscape irrigation (see Figures 1 and 2).

C101.2 Definition. The following term shall have the meaning shown herein.

GRAY WATER. Waste discharged from lavatories, bathtubs, showers, clothes washers and laundry trays.

C101.3 Permits. Permits shall be required in accordance with Section 106.

C101.4 Installation. In addition to the provisions of Section C101, systems for flushing of water closets and urinals shall comply with Section C102 and systems for subsurface landscape irrigation shall comply with Section C103. Except as provided for in Appendix C, all systems shall comply with the provisions of the *International Plumbing Code*.

C101.5 Materials. Above-ground drain, waste and vent piping for gray water systems shall conform to one of the standards listed in Table 702.1. Gray water underground building drainage and vent pipe shall conform to one of the standards listed in Table 702.2.

C101.6 Tests. Drain, waste and vent piping for gray water systems shall be tested in accordance with Section 312.

C101.7 Inspections. Gray water systems shall be inspected in accordance with Section 107.

C101.8 Potable water connections. Only connections in accordance with Section C102.3 shall be made between a gray water recycling system and a potable water system.

C101.9 Waste water connections. Gray water recycling systems shall receive only the waste discharge of bathtubs, showers, lavatories, clothes washers or laundry trays.

C101.10 Collection reservoir. Gray water shall be collected in an *approved* reservoir constructed of durable, nonabsorbent and corrosion-resistant materials. The reservoir shall be a closed and gas-tight vessel. *Access* openings shall be provided to allow inspection and cleaning of the reservoir interior.

C101.11 Filtration. Gray water entering the reservoir shall pass through an *approved* filter such as a media, sand or diatomaceous earth filter.

C101.11.1 Required valve. A full-open valve shall be installed downstream of the last fixture connection to the gray water discharge pipe before entering the required filter.

C101.12 Overflow. The collection reservoir shall be equipped with an overflow pipe having the same or larger diameter as the influent pipe for the gray water. The overflow pipe shall be trapped and shall be indirectly connected to the sanitary drainage system.

C101.13 Drain. A drain shall be located at the lowest point of the collection reservoir and shall be indirectly connected to the sanitary drainage system. The drain shall be the same diameter as the overflow pipe required in Section C101.12.

C101.14 Vent required. The reservoir shall be provided with a vent sized in accordance with Chapter 9 and based on the diameter of the reservoir influent pipe.

SECTION C102
SYSTEMS FOR FLUSHING WATER CLOSETS AND URINALS

C102.1 Collection reservoir. The holding capacity of the reservoir shall be a minimum of twice the volume of water required to meet the daily flushing requirements of the fixtures supplied with gray water, but not less than 50 gallons (189 L). The reservoir shall be sized to limit the retention time of gray water to a maximum of 72 hours.

C102.2 Disinfection. Gray water shall be disinfected by an *approved* method that employs one or more disinfectants such as chlorine, iodine or ozone that are recommended for use with the pipes, fittings and equipment by the manufacturer of the pipes, fittings and equipment.

C102.3 Makeup water. Potable water shall be supplied as a source of makeup water for the gray water system. The potable water supply shall be protected against backflow in accordance with Section 608. There shall be a full-open valve located on the makeup water supply line to the collection reservoir.

C102.4 Coloring. The gray water shall be dyed blue or green with a food grade vegetable dye before such water is supplied to the fixtures.

C102.5 Materials. Distribution piping shall conform to one of the standards listed in Table 605.3.

C102.6 Identification. Distribution piping and reservoirs shall be identified as containing nonpotable water. Piping identification shall be in accordance with Section 608.8.

SECTION C103
SUBSURFACE LANDSCAPE IRRIGATION SYSTEMS

C103.1 Collection reservoir. Reservoirs shall be sized to limit the retention time of gray water to a maximum of 24 hours.

C103.1.1 Identification. The reservoir shall be identified as containing nonpotable water.

C103.2 Valves required. A check valve and a full-open valve located on the discharge side of the check valve shall be installed on the effluent pipe of the collection reservoir.

C103.3 Makeup water. Makeup water shall not be required for subsurface landscape irrigation systems. Where makeup water is provided, the installation shall be in accordance with Section C102.3.

C103.4 Disinfection. Disinfection shall not be required for gray water used for subsurface landscape irrigation systems.

C103.5 Coloring. Gray water used for subsurface landscape irrigation systems shall not be required to be dyed.

C103.6 Estimating gray water discharge. The system shall be sized in accordance with the gallons-per-day-per-occupant number based on the type of fixtures connected to the gray water system. The discharge shall be calculated by the following equation:

$C = A \times B$

A = Number of occupants:

Residential—Number of occupants shall be determined by the actual number of occupants, but not less than two occupants for one bedroom and one occupant for each additional bedroom.

Commercial—Number of occupants shall be determined by the *International Building Code*®.

B = Estimated flow demands for each occupant:

Residential—25 gallons per day (94.6 Lpd) per occupant for showers, bathtubs and lavatories and 15 gallons per day (56.7 Lpd) per occupant for clothes washers or laundry trays.

Commercial—Based on type of fixture or water use records minus the discharge of fixtures other than those discharging gray water.

C = Estimated gray water discharge based on the total number of occupants.

C103.7 Percolation tests. The permeability of the soil in the proposed absorption system shall be determined by percolation tests or permeability evaluation.

C103.7.1 Percolation tests and procedures. At least three percolation tests in each system area shall be conducted. The holes shall be spaced uniformly in relation to the bottom depth of the proposed absorption system. More percolation tests shall be made where necessary, depending on system design.

C103.7.1.1 Percolation test hole. The test hole shall be dug or bored. The test hole shall have vertical sides and a horizontal dimension of 4 inches to 8 inches (102 mm to 203 mm). The bottom and sides of the hole shall be scratched with a sharp-pointed instrument to expose the natural soil. All loose material shall be removed from the hole and the bottom shall be covered with 2 inches (51 mm) of gravel or coarse sand.

C103.7.1.2 Test procedure, sandy soils. The hole shall be filled with clear water to a minimum of 12 inches (305 mm) above the bottom of the hole for tests in sandy soils. The time for this amount of water to seep away shall be determined, and this procedure shall be repeated if the water from the second filling of the hole seeps away in 10 minutes or less. The test shall proceed as follows: Water shall be added to a point not more than 6 inches (152 mm) above the gravel or coarse sand. Thereupon, from a fixed reference point, water levels shall be measured at 10-minute intervals for a period of 1 hour. Where 6 inches (152 mm) of water seeps away in less than 10 minutes, a shorter interval between measurements shall be used, but in no case shall the water depth exceed 6 inches (152 mm). Where 6 inches (152 mm) of water seeps away in less than 2 minutes, the test shall be stopped and a rate of less than 3 minutes per inch (7.2 s/mm) shall be reported. The final water level drop shall be used to calculate the percolation rate. Soils not meeting the above requirements shall be tested in accordance with Section C103.7.1.3.

C103.7.1.3 Test procedure, other soils. The hole shall be filled with clear water, and a minimum water depth of 12 inches (305 mm) shall be maintained above the bottom of the hole for a 4-hour period by refilling whenever necessary or by use of an automatic siphon. Water remaining in the hole after 4 hours shall not be removed. Thereafter, the soil shall be allowed to swell not less than 16 hours or more than 30 hours. Immediately after the soil swelling period, the measurements for determining the percolation rate shall be made as follows: Any soil sloughed into the hole shall be removed and the water level shall be adjusted to 6 inches (152 mm) above the gravel or coarse sand. Thereupon, from a fixed reference point, the water level shall be measured at 30-minute intervals for a period of 4 hours, unless two successive water level drops do not vary by more than $^1/_{16}$ inch (1.59 mm). At least three water level drops shall be observed and recorded. The hole shall be filled with clear water to a point not more than 6 inches (152 mm) above the gravel or coarse sand whenever it becomes nearly empty. Adjustments of the water level shall not be made during the three measurement periods except to the limits of the last measured water level drop. When the first 6 inches (152 mm) of water seeps away in less than 30 minutes,

the time interval between measurements shall be 10 minutes and the test run for 1 hour. The water depth shall not exceed 5 inches (127 mm) at any time during the measurement period. The drop that occurs during the final measurement period shall be used in calculating the percolation rate.

C103.7.1.4 Mechanical test equipment. Mechanical percolation test equipment shall be of an *approved* type.

C103.7.2 Permeability evaluation. Soil shall be evaluated for estimated percolation based on structure and texture in accordance with accepted soil evaluation practices. Borings shall be made in accordance with Section C103.7.1 for evaluating the soil.

C103.8 Subsurface landscape irrigation site location. The surface grade of all soil absorption systems shall be located at a point lower than the surface grade of any water well or reservoir on the same or adjoining property. Where this is not possible, the site shall be located so surface water drainage from the site is not directed toward a well or reservoir. The soil absorption system shall be located with a minimum horizontal distance between various elements as indicated in Table C103.8. Private sewage disposal systems in compacted areas, such as parking lots and driveways, are prohibited. Surface water shall be diverted away from any soil absorption site on the same or neighboring lots.

TABLE C103.8
LOCATION OF GRAY WATER SYSTEM

ELEMENT	MINIMUM HORIZONTAL DISTANCE	
	HOLDING TANK (feet)	IRRIGATION DISPOSAL FIELD (feet)
Buildings	5	2
Property line adjoining private property	5	5
Water wells	50	100
Streams and lakes	50	50
Seepage pits	5	5
Septic tanks	0	5
Water service	5	5
Public water main	10	10

For SI: 1 foot = 304.8 mm.

C103.9 Installation. Absorption systems shall be installed in accordance with Sections C103.9.1 through C103.9.5 to provide landscape irrigation without surfacing of gray water.

C103.9.1 Absorption area. The total absorption area required shall be computed from the estimated daily gray water discharge and the design-loading rate based on the percolation rate for the site. The required absorption area equals the estimated gray water discharge divided by the design-loading rate from Table C103.9.1.

TABLE C 103.9.1
DESIGN LOADING RATE

PERCOLATION RATE (minutes per inch)	DESIGN LOADING FACTOR (gallons per square foot per day)
0 to less than 10	1.2
10 to less than 30	0.8
30 to less than 45	0.72
45 to 60	0.4

For SI: 1 minute per inch = min/25.4 mm,
1 gallon per square foot = 40.7 L/m^2.

C103.9.2 Seepage trench excavations. Seepage trench excavations shall be a minimum of 1 foot (304 mm) to a maximum of 5 feet (1524 mm) wide. Trench excavations shall be spaced a minimum of 2 feet (610 mm) apart. The soil absorption area of a seepage trench shall be computed by using the bottom of the trench area (width) multiplied by the length of pipe. Individual seepage trenches shall be a maximum of 100 feet (30 480 mm) in *developed length*.

C103.9.3 Seepage bed excavations. Seepage bed excavations shall be a minimum of 5 feet (1524 mm) wide and have more than one distribution pipe. The absorption area of a seepage bed shall be computed by using the bottom of the trench area. Distribution piping in a seepage bed shall be uniformly spaced a maximum of 5 feet (1524 mm) and a minimum of 3 feet (914 mm) apart, and a maximum of 3 feet (914 mm) and a minimum of 1 foot (305 mm) from the sidewall or headwall.

C103.9.4 Excavation and construction. The bottom of a trench or bed excavation shall be level. Seepage trenches or beds shall not be excavated where the soil is so wet that such material rolled between the hands forms a soil wire. All smeared or compacted soil surfaces in the sidewalls or bottom of seepage trench or bed excavations shall be scarified to the depth of smearing or compaction and the loose material removed. Where rain falls on an open excavation, the soil shall be left until sufficiently dry so a soil wire will not form when soil from the excavation bottom is rolled between the hands. The bottom area shall then be scarified and loose material removed.

C103.9.5 Aggregate and backfill. A minimum of 6 inches of aggregate ranging in size from $^1/_2$ to $2^1/_2$ inches (12.7 mm to 64 mm) shall be laid into the trench below the distribution piping elevation. The aggregate shall be evenly distributed a minimum of 2 inches (51 mm) over the top of the distribution pipe. The aggregate shall be covered with *approved* synthetic materials or 9 inches (229 mm) of uncompacted marsh hay or straw. Building paper shall not be used to cover the aggregate. A minimum of 9 inches (229 mm) of soil backfill shall be provided above the covering.

C103.10 Distribution piping. Distribution piping shall be not less than 3 inches (76 mm) in diameter. Materials shall comply with Table C103.10. The top of the distribution pipe shall be not less than 8 inches (203 mm) below the original surface. The

slope of the distribution pipes shall be a minimum of 2 inches (51 mm) and a maximum of 4 inches (102 mm) per 100 feet (30 480 mm).

TABLE C103.10
DISTRIBUTION PIPE

MATERIAL	STANDARD
Polyethylene (PE) plastic pipe	ASTM F 405
Polyvinyl chloride (PVC) plastic pipe	ASTM D 2729
Polyvinyl chloride (PVC) plastic pipe with pipe stiffness of PS 35 and PS 50	ASTM F 1488

C103.11 Joints. Joints in distribution pipe shall be made in accordance with Section 705 of this code.

8

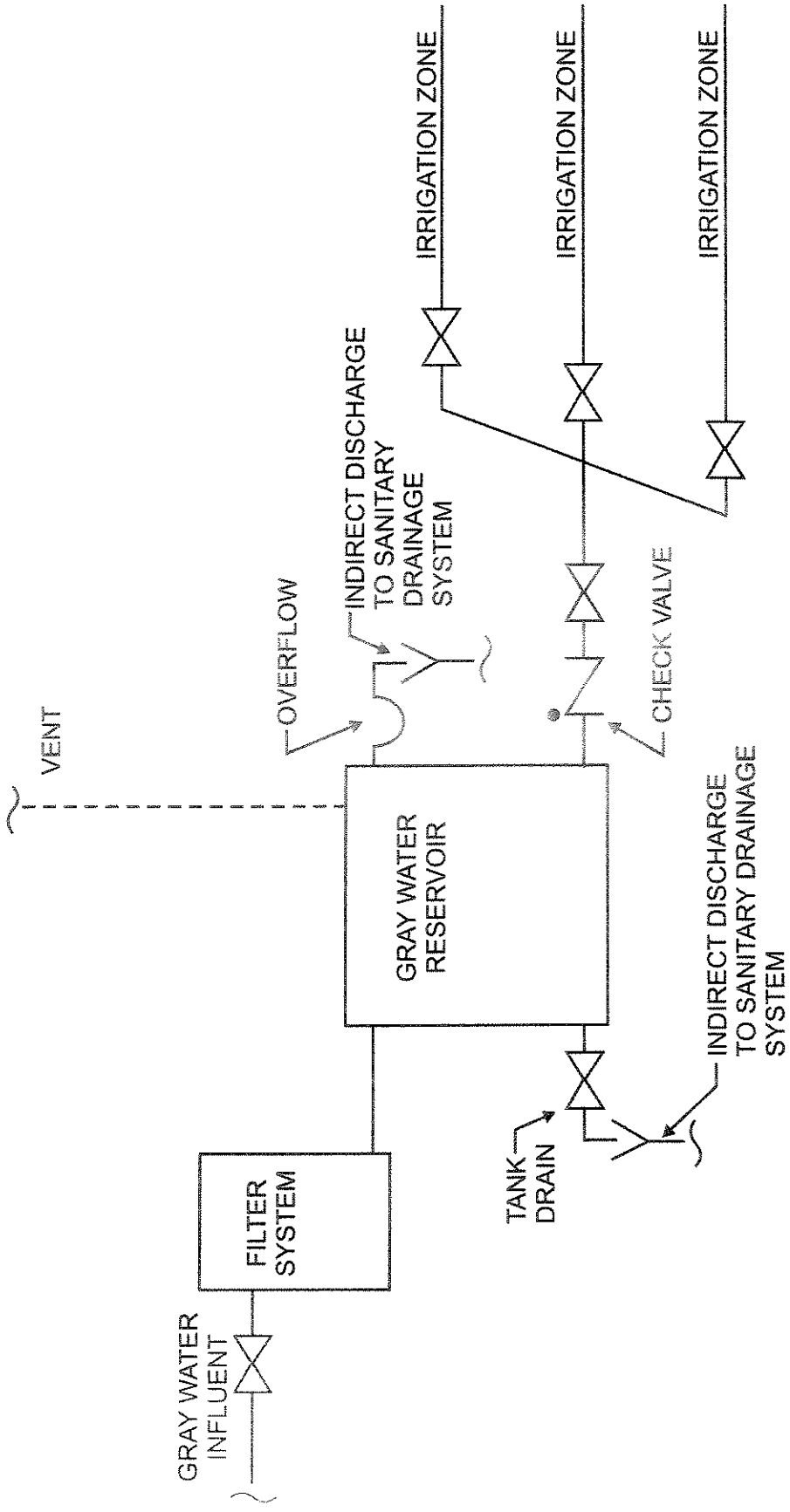

FIGURE 1
GRAY WATER RECYCLING SYSTEM FOR SUBSURFACE LANDSCAPE IRRIGATION

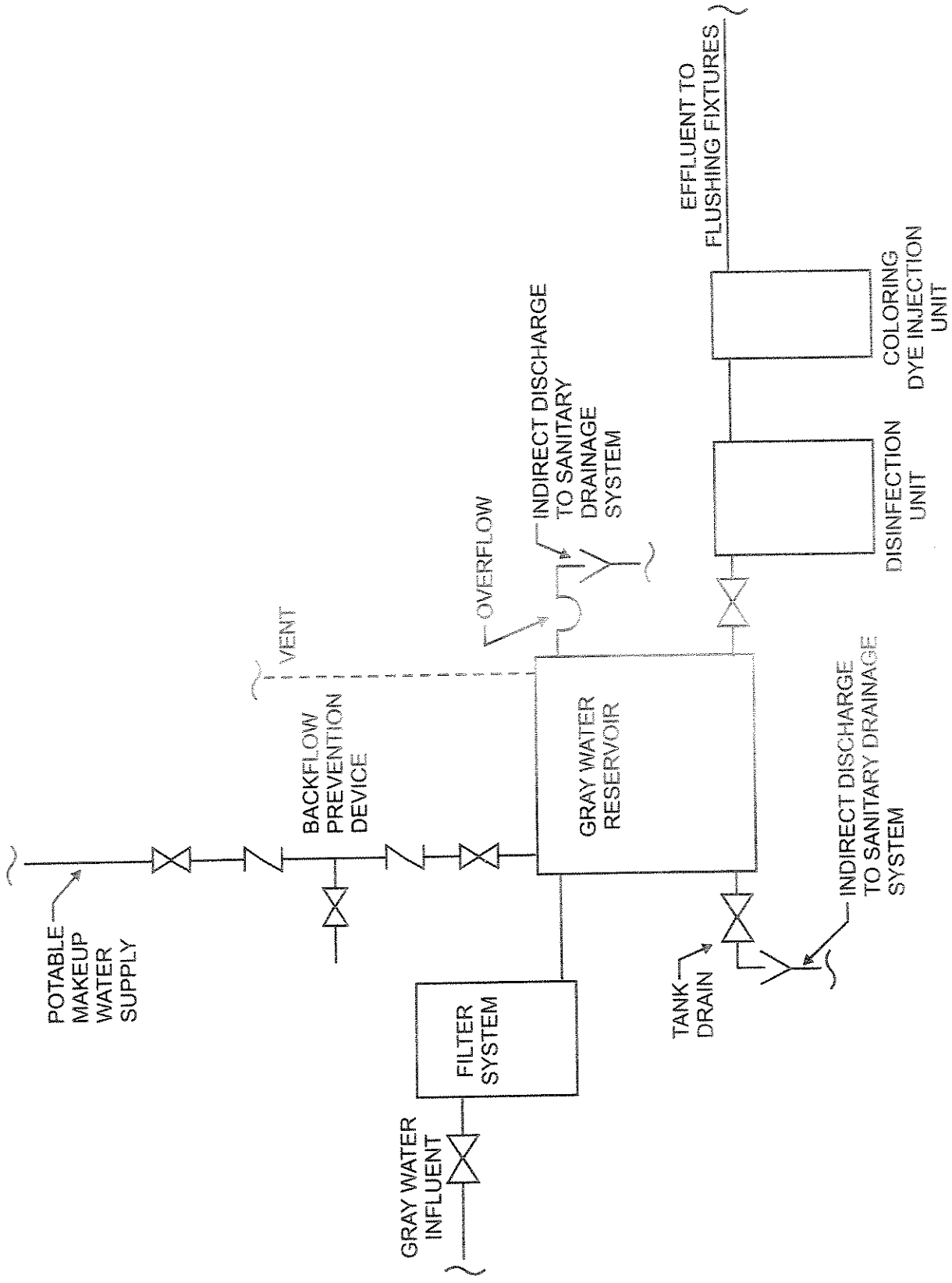

FIGURE 2
GRAY WATER RECYCLING SYSTEM FOR FLUSHING WATER CLOSETS AND URINALS

From: Thuruthy, Nisha [mailto:Thuruthy@pbworld.com]
Sent: Wednesday, January 28, 2009 2:28 PM
To: Rodgers, Emory
Cc: Curtis, Lamont W.; Culbertson, Charles (Grant)
Subject: Question about the USBC and IPC

Mr. Rodgers,

I am a member of the consultant team working with the City of Virginia Beach Department of Public Utilities to initiate a Fats, Oils, and Grease (FOG) Program. The idea of the FOG Program is to help enforce existing code (i.e. that regarding the installation and maintenance of grease interceptors) in order to minimize grease-related sanitary sewer overflows. The City has discovered that a full third of its sanitary sewer overflows are caused by or related to grease. A pilot program was conducted and it was found that, while some food service establishments are doing a wonderful job of maintaining their grease interceptors, many are not. Many food service employees do not know where their grease interceptor is or what it is and many establishments don't have a grease interceptor at all. We concluded that the City's FOG Program would have to regulate food service establishments and enforce the International Plumbing Code.

I understand that the 2006 specifies the following about grease interceptors: 1) that they should be connected to fixtures and equipment discharging grease-laden wastewater, 2) that the size, type, and location of each interceptor shall be designed and installed in accordance with manufacturer instructions, and 3) that they shall conform to PDI G101 and ASME 112.14.3.

The problem is that PDI has not certified any large concrete grease interceptors. They therefore do not have flow ratings. Instead, the manufacturers rate them by volume in gallons. The standard that I helped to develop estimates a size in gallons that is appropriate for a food service establishment. As recommended by the commentary of the IPC, flow rate and retention time are used to estimate this tank volume. After doing research, I found that many different service authorities and Cities have their own methods for sizing large grease interceptors. Washington Suburban Sanitary Commission, Metro Water Services of Nashville and Davidson County, TN, and Cary, NC are some of those researched that have sizing methods of their own.

Here are my questions:

- **Does the IPC Commentary hold the same legal weight that the Code does?**
- **Are we in conflict with the IPC at all that you can see?**

We are meeting with Virginia Beach stakeholders tomorrow and it would be helpful to have your comments and suggestions. I would like to talk to you today if possible. Please call me directly at the number below, or call (757) 466-1732 and someone will page me. Thanks for your time. I look forward to hearing from you.

Nisha Thuruthy, EIT

Civil Engineer

Parsons Brinckerhoff
6161 Kempsville Circle, Suite 110
Norfolk, VA 23502
USA

CHAPTER 10

TRAPS, INTERCEPTORS AND SEPARATORS

SECTION 1001
GENERAL

1001.1 Scope. This chapter shall govern the material and installation of traps, interceptors and separators.

SECTION 1002
TRAP REQUIREMENTS

1002.1 Fixture traps. Each plumbing fixture shall be separately trapped by a liquid-seal trap, except as otherwise permitted by this code. The vertical distance from the fixture outlet to the trap weir shall not exceed 24 inches (610 mm), and the horizontal distance shall not exceed 30 inches (610 mm) measured from the centerline of the fixture outlet to the centerline of the inlet of the trap. The height of a clothes washer standpipe above a trap shall conform to Section 802.4. A fixture shall not be double trapped.

Exceptions:

1. This section shall not apply to fixtures with integral traps.
2. A combination plumbing fixture is permitted to be installed on one trap, provided that one compartment is not more than 6 inches (152 mm) deeper than the other compartment and the waste outlets are not more than 30 inches (762 mm) apart.
3. A grease interceptor intended to serve as a fixture trap in accordance with the manufacturer's installation instructions shall be permitted to serve as the trap for a single fixture or a combination sink of not more than three compartments where the vertical distance from the fixture outlet to the inlet of the interceptor does not exceed 30 inches (762 mm) and the *developed length* of the waste pipe from the most upstream fixture outlet to the inlet of the interceptor does not exceed 60 inches (1524 mm).

1002.2 Design of traps. Fixture traps shall be self-scouring. Fixture traps shall not have interior partitions, except where such traps are integral with the fixture or where such traps are constructed of an *approved* material that is resistant to corrosion and degradation. Slip joints shall be made with an *approved* elastomeric gasket and shall be installed only on the trap inlet, trap outlet and within the trap seal.

1002.3 Prohibited traps. The following types of traps are prohibited:

1. Traps that depend on moving parts to maintain the seal.
2. Bell traps.
3. Crown-vented traps.
4. Traps not integral with a fixture and that depend on interior partitions for the seal, except those traps constructed of an *approved* material that is resistant to corrosion and degradation.
5. "S" traps.
6. Drum traps.

   Exception: Drum traps used as solids interceptors and drum traps serving chemical waste systems shall not be prohibited.

1002.4 Trap seals. Each fixture trap shall have a liquid seal of not less than 2 inches (51 mm) and not more than 4 inches (102 mm), or deeper for special designs relating to accessible fixtures. Where a trap seal is subject to loss by evaporation, a trap seal primer valve shall be installed. Trap seal primer valves shall connect to the trap at a point above the level of the trap seal. A trap seal primer valve shall conform to ASSE 1018 or ASSE 1044.

1002.5 Size of fixture traps. Fixture trap size shall be sufficient to drain the fixture rapidly and not less than the size indicated in Table 709.1. A trap shall not be larger than the drainage pipe into which the trap discharges.

1002.6 Building traps. Building (house) traps shall be prohibited, except where local conditions necessitate such traps. Building traps shall be provided with a cleanout and a relief vent or fresh air intake on the inlet side of the trap. The size of the relief vent or fresh air intake shall not be less than one-half the diameter of the drain to which the relief vent or air intake connects. Such relief vent or fresh air intake shall be carried above grade and shall be terminated in a screened outlet located outside the building.

1002.7 Trap setting and protection. Traps shall be set level with respect to the trap seal and, where necessary, shall be protected from freezing.

1002.8 Recess for trap connection. A recess provided for connection of the underground trap, such as one serving a bathtub in slab-type construction, shall have sides and a bottom of corrosion-resistant, insect- and verminproof construction.

1002.9 Acid-resisting traps. Where a vitrified clay or other brittleware, acid-resisting trap is installed underground, such trap shall be embedded in concrete extending 6 inches (152 mm) beyond the bottom and sides of the trap.

1002.10 Plumbing in mental health centers. In mental health centers, pipes and traps shall not be exposed.

SECTION 1003
INTERCEPTORS AND SEPARATORS

1003.1 Where required. Interceptors and separators shall be provided to prevent the discharge of oil, grease, sand and other substances harmful or hazardous to the building drainage system, the *public sewer*, the private sewage disposal system or the sewage treatment plant or processes.

1003.2 Approval. The size, type and location of each interceptor and of each separator shall be designed and installed in accordance with the manufacturer's instructions and the requirements of this section based on the anticipated conditions of use. Wastes that do not require treatment or separation shall not be discharged into any interceptor or separator.

1003.3 Grease interceptors. Grease interceptors shall comply with the requirements of Sections 1003.3.1 through 1003.3.5.

1003.3.1 Grease interceptors and automatic grease removal devices required. A grease interceptor or automatic grease removal device shall be required to receive the drainage from fixtures and equipment with grease-laden waste located in food preparation areas, such as in restaurants, hotel kitchens, hospitals, school kitchens, bars, factory cafeterias and clubs. Fixtures and equipment shall include pot sinks, prerinse sinks; soup kettles or similar devices; wok stations; floor drains or sinks into which kettles are drained; automatic hood wash units and dishwashers without prerinse sinks. Grease interceptors and automatic grease removal devices shall receive waste only from fixtures and equipment that allow fats, oils or grease to be discharged.

1003.3.2 Food waste grinders. Where food waste grinders connect to grease interceptors, a solids interceptor shall separate the discharge before connecting to the grease interceptor. Solids interceptors and grease interceptors shall be sized and rated for the discharge of the food waste grinder. Emulsifiers, chemicals, enzymes and bacteria shall not discharge into the food waste grinder.

1003.3.3 Grease interceptors and automatic grease removal devices not required. A grease interceptor or an automatic grease removal device shall not be required for individual dwelling units or any private living quarters.

1003.3.4 Grease interceptors and automatic grease removal devices. Grease interceptors and automatic grease removal devices shall be sized in accordance with PDI G101, ASME A112.14.3 Appendix A, or ASME A112.14.4. Grease interceptors and automatic grease removal devices shall be designed and tested in accordance with PDI G101, ASME A112.14.3 or ASME A112.14.4. Grease interceptors and automatic grease removal devices shall be installed in accordance with the manufacturer's instructions.

Exception: Interceptors that have a volume of not less than 500 gallons (1893 L) and that are located outdoors shall not be required to meet the requirements of this section.

1003.3.4.1 Grease interceptor capacity. Grease interceptors shall have the grease retention capacity indicated in Table 1003.3.4.1 for the flow-through rates indicated.

1003.3.4.2 Rate of flow controls. Grease interceptors shall be equipped with devices to control the rate of water flow so that the water flow does not exceed the rated flow. The flow-control device shall be vented and terminate not less than 6 inches (152 mm) above the flood rim level or be installed in accordance with the manufacturer's instructions.

1003.3.5 Automatic grease removal devices. Where automatic grease removal devices are installed, such devices shall be located downstream of each fixture or multiple fixtures in accordance with the manufacturer's instructions. The automatic grease removal device shall be sized to pretreat the measured or calculated flows for all connected fixtures or equipment. Ready *access* shall be provided for inspection and maintenance.

1003.4 Oil separators required. At repair garages, car-washing facilities, at factories where oily and flammable liquid wastes are produced and in hydraulic elevator pits, separators shall be installed into which all oil-bearing, grease-bearing or flammable wastes shall be discharged before emptying into the building drainage system or other point of disposal.

Exception: An oil separator is not required in hydraulic elevator pits where an *approved* alarm system is installed.

TABLE 1003.3.4.1
CAPACITY OF GREASE INTERCEPTORS[a]

TOTAL FLOW-THROUGH RATING (gpm)	GREASE RETENTION CAPACITY (pounds)
4	8
6	12
7	14
9	18
10	20
12	24
14	28
15	30
18	36
20	40
25	50
35	70
50	100
75	150
100	200

For SI: 1 gallon per minute = 3.785 L/m, 1 pound = 0.454 kg.

a. For total flow-through ratings greater than 100 (gpm), double the flow-through rating to determine the grease retention capacity (pounds).

1003.4.1 Separation of liquids. A mixture of treated or untreated light and heavy liquids with various specific gravities shall be separated in an *approved* receptacle.

1003.4.2 Oil separator design. Oil separators shall be designed in accordance with Sections 1003.4.2.1 and 1003.4.2.2.

1003.4.2.1 General design requirements. Oil separators shall have a depth of not less than 2 feet (610 mm) below the invert of the discharge drain. The outlet opening of the separator shall have not less than an 18-inch (457 mm) water seal.

1003.4.2.2 Garages and service stations. Where automobiles are serviced, greased, repaired or washed or where gasoline is dispensed, oil separators shall have a

minimum capacity of 6 cubic feet (0.168 m^3) for the first 100 square feet (9.3 m^2) of area to be drained, plus 1 cubic foot (0.28 m^3) for each additional 100 square feet (9.3 m^2) of area to be drained into the separator. Parking garages in which servicing, repairing or washing is not conducted, and in which gasoline is not dispensed, shall not require a separator. Areas of commercial garages utilized only for storage of automobiles are not required to be drained through a separator.

1003.5 Sand interceptors in commercial establishments. Sand and similar interceptors for heavy solids shall be designed and located so as to be provided with ready *access* for cleaning, and shall have a water seal of not less than 6 inches (152 mm).

1003.6 Laundries. Laundry facilities not installed within an individual dwelling unit or intended for individual family use shall be equipped with an interceptor with a wire basket or similar device, removable for cleaning, that prevents passage into the drainage system of solids $^1/_2$ inch (12.7 mm) or larger in size, string, rags, buttons or other materials detrimental to the public sewage system.

1003.7 Bottling establishments. Bottling plants shall discharge process wastes into an interceptor that will provide for the separation of broken glass or other solids before discharging waste into the drainage system.

1003.8 Slaughterhouses. Slaughtering room and dressing room drains shall be equipped with *approved* separators. The separator shall prevent the discharge into the drainage system of feathers, entrails and other materials that cause clogging.

1003.9 Venting of interceptors and separators. Interceptors and separators shall be designed so as not to become air bound where tight covers are utilized. Each interceptor or separator shall be vented where subject to a loss of trap seal.

1003.10 Access and maintenance of interceptors and separators. *Access* shall be provided to each interceptor and separator for service and maintenance. Interceptors and separators shall be maintained by periodic removal of accumulated grease, scum, oil, or other floating substances and solids deposited in the interceptor or separator.

SECTION 1004
MATERIALS, JOINTS AND CONNECTIONS

1004.1 General. The materials and methods utilized for the construction and installation of traps, interceptors and separators shall comply with this chapter and the applicable provisions of Chapters 4 and 7. The fittings shall not have ledges, shoulders or reductions capable of retarding or obstructing flow of the piping.

CHAPTER 11
REFRIGERATION

SECTION 1101
GENERAL

1101.1 Scope. This chapter shall govern the design, installation, construction and repair of refrigeration systems that vaporize and liquefy a fluid during the refrigerating cycle. Refrigerant piping design and installation, including pressure vessels and pressure relief devices, shall conform to this code. Permanently installed refrigerant storage systems and other components shall be considered as part of the refrigeration system to which they are attached.

1101.2 Factory-built equipment and appliances. *Listed* and *labeled* self-contained, factory-built *equipment* and appliances shall be tested in accordance with UL 207, 412, 471 or 1995. Such *equipment* and appliances are deemed to meet the design, manufacture and factory test requirements of this code if installed in accordance with their listing and the manufacturer's installation instructions.

1101.3 Protection. Any portion of a refrigeration system that is subject to physical damage shall be protected in an *approved* manner.

1101.4 Water connection. Water supply and discharge connections associated with refrigeration systems shall be made in accordance with this code and the *International Plumbing Code*.

1101.5 Fuel gas connection. Fuel gas devices, *equipment* and appliances used with refrigeration systems shall be installed in accordance with the *International Fuel Gas Code*.

1101.6 General. Refrigeration systems shall comply with the requirements of this code and, except as modified by this code, ASHRAE 15. Ammonia-refrigerating systems shall comply with this code and, except as modified by this code, ASHRAE 15 and IIAR 2.

1101.7 Maintenance. Mechanical refrigeration systems shall be maintained in proper operating condition, free from accumulations of oil, dirt, waste, excessive corrosion, other debris and leaks.

1101.8 Change in refrigerant type. The type of refrigerant in refrigeration systems having a refrigerant circuit containing more than 220 pounds (99.8 kg) of Group A1 or 30 pounds (13.6 kg) of any other group refrigerant shall not be changed without prior notification to the code official and compliance with the applicable code provisions for the new refrigerant type.

[F] 1101.9 Refrigerant discharge. Notification of refrigerant discharge shall be provided in accordance with the *International Fire Code*.

1101.10 Locking access port caps. Refrigerant circuit access ports located outdoors shall be fitted with locking type tamper-resistant caps.

SECTION 1102
SYSTEM REQUIREMENTS

1102.1 General. The system classification, allowable refrigerants, maximum quantity, enclosure requirements, location limitations, and field pressure test requirements shall be determined as follows:

1. Determine the refrigeration system's classification, in accordance with Section 1103.3.
2. Determine the refrigerant classification in accordance with Section 1103.1.
3. Determine the maximum allowable quantity of refrigerant in accordance with Section 1104, based on type of refrigerant, system classification and *occupancy*.
4. Determine the system enclosure requirements in accordance with Section 1104.
5. Refrigeration *equipment* and *appliance* location and installation shall be subject to the limitations of Chapter 3.
6. Nonfactory-tested, field-erected *equipment* and appliances shall be pressure tested in accordance with Section 1108.

1102.2 Refrigerants. The refrigerant shall be that which the *equipment* or *appliance* was designed to utilize or converted to utilize. Refrigerants not identified in Table 1103.1 shall be *approved* before use.

1102.2.1 Mixing. Refrigerants, including refrigerant blends, with different designations in ASHRAE 34 shall not be mixed in a system.

Exception: Addition of a second refrigerant is allowed where permitted by the *equipment* or *appliance* manufacturer to improve oil return at low temperatures. The refrigerant and amount added shall be in accordance with the manufacturer's instructions.

1102.2.2 Purity. Refrigerants used in refrigeration systems shall be new, recovered or *reclaimed refrigerants* in accordance with Section 1102.2.2.1, 1102.2.2.2 or 1102.2.2.3. Where required by the *equipment* or *appliance* owner or the code official, the installer shall furnish a signed declaration that the refrigerant used meets the requirements of Section 1102.2.2.1, 1102.2.2.2 or 1102.2.2.3.

Exception: The refrigerant used shall meet the purity specifications set by the manufacturer of the *equipment* or *appliance* in which such refrigerant is used where such specifications are different from that specified in Sections 1102.2.2.1, 1102.2.2.2 and 1102.2.2.3.

1102.2.2.1 New refrigerants. Refrigerants shall be of a purity level specified by the *equipment* or *appliance* manufacturer.

tures are not higher than the top of the fan discharge opening.

SECTION 507
COMMERCIAL KITCHEN HOODS

507.1 General. Commercial kitchen exhaust hoods shall comply with the requirements of this section. Hoods shall be Type I or II and shall be designed to capture and confine cooking vapors and residues. Commercial kitchen exhaust hood systems shall operate during the cooking operation.

Exceptions:

1. Factory-built commercial exhaust hoods which are tested in accordance with UL 710, *listed, labeled* and installed in accordance with Section 304.1 shall not be required to comply with Sections 507.4, 507.7, 507.11, 507.12, 507.13, 507.14 and 507.15.
2. Factory-built commercial cooking recirculating systems which are tested in accordance with UL 710B, *listed, labeled* and installed in accordance with Section 304.1 shall not be required to comply with Sections 507.4, 507.5, 507.7, 507.12, 507.13, 507.14 and 507.15. Spaces in which such systems are located shall be considered to be kitchens and shall be ventilated in accordance with Table 403.3. For the purpose of determining the floor area required to be ventilated, each individual *appliance* shall be considered as occupying not less than 100 square feet (9.3 m^2).
3. Net exhaust volumes for hoods shall be permitted to be reduced during part-load cooking conditions, where engineered or *listed* multispeed or variable-speed controls automatically operate the exhaust system to maintain capture and removal of cooking effluents as required by this section. Reduced volumes shall not be below that required to maintain capture and removal of effluents from the idle cooking appliances that are operating in a standby mode.

507.2 Where required. A Type I or Type II hood shall be installed at or above all *commercial cooking appliances* in accordance with Sections 507.2.1 and 507.2.2. Where any cooking *appliance* under a single hood requires a Type I hood, a Type I hood shall be installed. Where a Type II hood is required, a Type I or Type II hood shall be installed.

507.2.1 Type I hoods. Type I hoods shall be installed where cooking *appliances* produce grease or smoke. Type I hoods shall be installed over *medium-duty, heavy-duty* and *extra-heavy-duty cooking appliances*. Type I hoods shall be installed over *light-duty cooking appliances* that produce grease or smoke.

507.2.1.1 Operation. Type I hood systems shall be designed and installed to automatically activate the exhaust fan whenever cooking operations occur. The activation of the exhaust fan shall occur through an interlock with the cooking appliances, by means of heat sensors or by means of other *approved* methods.

507.2.2 Type II hoods. Type II hoods shall be installed above dishwashers and *light-duty appliances* that produce heat or moisture and do not produce grease or smoke, except where the heat and moisture loads from such appliances are incorporated into the HVAC system design or into the design of a separate removal system. Type II hoods shall be installed above all *light-duty appliances* that produce products of *combustion* and do not produce grease or smoke. Spaces containing cooking appliances that do not require Type II hoods shall be ventilated in accordance with Section 403.3. For the purpose of determining the floor area required to be ventilated, each individual *appliance* that is not required to be installed under a Type II hood shall be considered as occupying not less than 100 square feet (9.3 m^2).

507.2.3 Domestic cooking appliances used for commercial purposes. Domestic cooking appliances utilized for commercial purposes shall be provided with Type I or Type II hoods as required for the type of appliances and processes in accordance with Sections 507.2, 507.2.1 and 507.2.2.

507.2.4 Extra-heavy-duty. Type I hoods for use over *extra-heavy-duty cooking appliances* shall not cover *heavy-, medium-* or *light-duty appliances*. Such hoods shall discharge to an exhaust system that is independent of other exhaust systems.

507.3 Fuel-burning appliances. Where vented fuel-burning appliances are located in the same room or space as the hood, provisions shall be made to prevent the hood system from interfering with normal operation of the *appliance* vents.

507.4 Type I materials. Type I hoods shall be constructed of steel having a minimum thickness of 0.0466 inch (1.181 mm) (No. 18 gage) or stainless steel not less than 0.0335 inch [0.8525 mm (No. 20 MSG)] in thickness.

507.5 Type II hood materials. Type II hoods shall be constructed of steel having a minimum thickness of 0.0296 inch (0.7534 mm) (No. 22 gage) or stainless steel not less than 0.0220 inch (0.5550 mm) (No. 24 gage) in thickness, copper sheets weighing not less than 24 ounces per square foot (7.3 kg/m^2) or of other *approved* material and gage.

507.6 Supports. Type I hoods shall be secured in place by noncombustible supports. All Type I and Type II hood supports shall be adequate for the applied load of the hood, the unsupported ductwork, the effluent loading and the possible weight of personnel working in or on the hood.

507.7 Hood joints, seams and penetrations. Hood joints, seams and penetrations shall comply with Sections 507.7.1 and 507.7.2.

507.7.1 Type I hoods. External hood joints, seams and penetrations for Type I hoods shall be made with a continuous external liquid-tight weld or braze to the lowest outermost perimeter of the hood. Internal hood joints, seams, penetrations, filter support frames and other appendages attached inside the hood shall not be required to be welded or brazed but shall be otherwise sealed to be grease tight.

Exceptions:

1. Penetrations shall not be required to be welded or brazed where sealed by devices that are *listed* for the application.

VIRGINIA DEPARTMENT OF HOUSING AND COMMUNITY DEVELOPMENT
DIVISION OF BUILDING AND FIRE REGULATION

Code Change Form for the 2009 Code Change Cycle

Code Change Number:_____

Proponent Information (Check one): ☐ Individual ☐ Government Entity ☒ Company

Name: J. Kenneth Payne, Jr., AIA Representing: VSAIA

Mailing Address: 3200 Norfolk Street, Richmond, Virginia 23230

Email Address: kpayne@moseleyarchitects.com Telephone Number: 804-794-7555

Proposal Information

Code(s) and Section(s): 2009 IBC Section 3008 – Occupant Evacuation Elevators

Proposed Change (including all relevant section numbers, if multiple sections):

3008.1 General. ~~Where~~ All elevators ~~are to be~~ used for occupant self-evacuation during fires~~, all passenger elevators for general public use~~ shall comply with this section. ~~Where other elevators are used for occupant self-evacuation, they shall also comply with this section.~~

3008.2 Fire safety and evacuation plan. The building shall have an *approved* fire safety and evacuation plan in accordance with the applicable requirements of Section 404 of the *International Fire Code*. The fire safety and evacuation plan shall incorporate specific procedures for the occupants using evacuation elevators.

3008.3 Operation. ~~The~~ When occupant evacuation elevators ~~shall be~~ are used for occupant self-evacuation, the occupant evacuation elevators shall be used only in the normal elevator operating mode prior to Phase I Emergency Recall Operation in accordance with the requirements in ASME A17.1/CSA B44 and the building's fire safety and evacuation plan.

3008.4 Additional exit stairway. Where an additional *means of egress* is required in accordance with Section 403.5.2, an additional *exit stairway* shall not be required to be installed in buildings having elevators used for occupant self-evacuation in accordance with this section.

3008.5 Emergency voice/alarm communication system. The building shall be provided with an emergency voice/alarm communication system. The emergency voice/alarm communication system shall be accessible to the fire department. The system shall be provided in accordance with Section 907.5.2.2.

> **3008.5.1 Notification appliances.** A minimum of one audible and one visible notification appliance shall be installed within each occupant evacuation elevator ~~lobby~~ corridor, space, or room in accordance with Section 3008.11.

3008.6 Automatic sprinkler system. The building shall be protected throughout by an *approved*, electrically-supervised automatic sprinkler system in accordance with Section 903.3.1.1, except as otherwise permitted by Section 903.3.1.1.1 and as prohibited by Section 3008.6.1.

> **3008.6.1 Prohibited locations.** Automatic sprinklers shall not be installed in elevator machine rooms and elevator machine spaces for occupant evacuation elevators.

3008.6.2 Sprinkler system monitoring. The sprinkler system shall have a sprinkler control valve supervisory switch and waterflow-initiating device provided for each floor that is monitored by the building's fire alarm system.

3008.7 High-hazard content areas. No building areas shall contain high-hazard contents exceeding the maximum allowable quantities per *control area* as addressed in Section 414.2.

3008.8 Shunt trip. Means for elevator shutdown in accordance with Section 3006.5 shall not be installed on elevator systems used for occupant evacuation elevators.

3008.9 Hoistway enclosure protection. The occupant evacuation elevators shall be located in hoistway enclosure(s) complying with Section 708.

3008.10 Water protection. The occupant evacuation elevator hoistway shall be designed ~~utilizing an *approved* method~~ to prevent water from ~~the operation of the *automatic sprinkler system* from~~ infiltrating into the hoistway enclosure upon activation of the *automatic sprinkler system*.

3008.11 Occupant evacuation elevator ~~lobby~~ opening into corridor, space, or room. The occupant evacuation elevators shall open into ~~an elevator lobby~~ a corridor, space, or room in accordance with Sections 3008.11.1 through 3008.11.4.

3008.11.1 Access. The occupant evacuation elevator ~~lobby~~ corridor, space, or room shall have direct access to an *exit enclosure*.

~~**3008.11.2 Lobby enclosure.** The occupant evacuation elevator lobby shall be enclosed with a *smoke barrier* having a minimum 1-hour *fire-resistance rating*, except that lobby doorways shall comply with Section 3008.11.5.~~

~~**Exception:** Enclosed occupant evacuation elevator lobbies are not required at the level(s) of *exit discharge*.~~

~~**3008.11.3 Lobby doorways.** Each occupant evacuation elevator lobby shall be provided with a doorway that is protected with a 3/4-hour *fire door assembly* complying with Section 715.4.~~

~~**3008.11.3.1 Vision panel.** A vision panel shall be installed in each *fire door assembly* protecting the lobby doorway. The vision panel shall consist of fire-protection-rated glazing and shall be located to furnish clear vision of the occupant evacuation elevator lobby.~~

~~**3008.11.3.2 Door closing.** Each *fire door assembly* protecting the lobby doorway shall be automatic-closing upon receipt of any fire alarm signal from the emergency voice/alarm communication system serving the building.~~

3008.11.24 ~~Lobby~~ Corridor, space, or room size. Each occupant evacuation elevator ~~lobby~~ corridor, space, or room shall have minimum floor area as follows, except the size of corridors, spaces, or rooms serving multiple banks of elevators shall have the minimum floor area *approved* on an individual basis and shall be consistent with the building's fire safety and evacuation plan:

1. ~~The occupant evacuation elevator lobby f~~Floor area shall accommodate, at 3 square feet (0.28m2) per person, a minimum of 25 percent of the *occupant load* of the floor area served by the ~~lobby~~ corridor, space, or room.

2. ~~The occupant evacuation elevator lobby~~ ~~f~~Floor area ~~also~~ shall accommodate one *wheelchair* space of 30 inches by 48 inches (760 mm by 1220 mm) for each 50 persons, or portion thereof, of the *occupant load* of the floor area served by the ~~lobby~~ corridor, space, or room.

~~**Exception:** The size of lobbies serving multiple banks of elevators shall have the minimum floor area *approved* on an individual basis and shall be consistent with the building's fire safety and evacuation plan.~~

3008.11.3~~5~~ Signage. An *approved* sign indicating elevators are suitable for occupant self-evacuation shall be posted on all floors adjacent to each elevator call station serving occupant evacuation elevators.

3008.12 ~~Lobby s~~Status indicator. Each occupant evacuation elevator ~~lobby~~ corridor, space, or room shall be equipped with a status indicator arranged to display all of the following information:

1. An illuminated green light and the message, "Elevators available for occupant evacuation" when the elevators are operating in normal service and the fire alarm system is indicating an alarm in the building.

2. An illuminated red light and the message, "Elevators out of service, use exit stairs" when the elevators are in Phase I emergency recall operation in accordance with the requirements in ASME A17.1/CSA B44.

3. No illuminated light or message when the elevators are operating in normal service.

3008.13 Two-way communication system. A two-way communication system shall be provided in each occupant evacuation elevator ~~lobby~~ corridor, space, or room for the purpose of initiating communication with the fire command center or an alternative location *approved* by the fire ~~department~~ chief.

3008.13.1 Design and installation. The two-way communication system shall include audible and visible signals and shall be designed and installed in accordance with the requirements of ICC A117.1.

3008.13.2 Instructions. Instructions for the use of the two-way communication system along with the location of the station shall be permanently located adjacent to each station. Signage shall comply with the ICC A117.1 requirements for visual characters.

3008.14 Elevator system monitoring. The occupant evacuation elevators shall be continuously monitored at the fire command center or ~~a central control point~~ an alternative location *approved* by the fire ~~department~~ chief and arranged to display all of the following information:

1. Floor location of each elevator car.

2. Direction of travel of each elevator car.

3. Status of each elevator car with respect to whether it is occupied.

4. Status of normal power to the elevator equipment, elevator controller cooling equipment, and elevator machine room ventilation and cooling equipment.

5. Status of standby or emergency power system that provides backup power to the elevator equipment, elevator controller cooling equipment, and elevator machine room ventilation and cooling equipment.

6. Activation of any fire ~~alarm-initiating~~ detection device in any corridor, space, or room serving elevator ~~lobby~~, elevator machine room or machine space, or elevator hoistway.

3008.14.1 Elevator recall. The fire command center or an alternative location *approved* by the fire ~~department~~ chief shall be provided with the means to manually initiate a Phase I Emergency Recall of the occupant evacuation elevators in accordance with ASME A17.1/CSA B44.

3008.15 Electrical power. The following features serving each occupant evacuation elevator shall be supplied by both normal power and Type 60/Class 2/Level 1 standby power:

1. Elevator equipment.

2. Elevator machine room ventilation and cooling equipment.

3. Elevator controller cooling equipment.

3008.15.1 Protection of wiring or cables. Wires or cables that provide normal and standby power, control signals, communication with the car, lighting, heating, air conditioning, ventilation and fire-detecting systems to occupant evacuation elevators shall be protected by construction having a minimum 1-hour *fire-resistance rating* or shall be circuit integrity cable having a minimum 1-hour *fire-resistance rating*.

Supporting Statement (including intent, need, and impact of the proposal):

Some of the paragraph structure is confusing, so this proposal attempts to simplify the structure to ensure clear and concise direction. To start, "*occupant self-evacuation*" should be defined within the code, since the need for this code section is dependent on how this term is applied. Once defined, every time this term is used in this section, it would need to be *italicized*.

3008.1 General. Wording is confusing and implies all elevators that are used for occupant self-evacuation (based on the 2nd sentence) are required to comply with this section; therefore, the proposed language clarifies the intent.

3008.3 Operation. Wording is confusing and could be interpreted to mean these elevators can *only* be used in an emergency event. The proposed language clarifies the intent, which is *when used* in an emergency event, it must operate accordingly.

3008.5.1 Notification appliances. Since Virginia does not require elevator lobbies when the building is sprinkled, and Section 3008.6 requires the building to be sprinkled, then elevator lobbies, as they relate to Section 3008 can be deleted. Therefore, all references to an elevator *lobby* have been deleted; however, the need for the notification devices remained.

3008.10 Water protection. Considering "approval' is a requirement before a permit is issued, it is not necessary to repeat that requirement again. The wording of the remaining part of the sentence was restructured to read more clearly.

3008.11 Occupant evacuation elevator lobby. Since Virginia does not require elevator lobbies when the building is sprinkled, and Section 3008.6 requires the building to be sprinkled, then elevator lobbies, as they relate to Section 3008 can be deleted. However, there are other components included under "elevator lobby" that should remain. Therefore, the referenced code section was re-titled to closely parallel the requirements without using the term "elevator lobby," and relevant portions were retained and renumbered. Also, the formatting of the exception regarding the "lobby" size was misleading and could be interpreted to mean it was only an exception to Section 3008.11.4.2, when in fact, the exception applies to Section 3008.11.4. Relocating this text within the Section 3008.11.4 paragraph itself clarifies the intent.

3008.12 Lobby status indicator. Removed italics from Section 3008.12.2, since the sentence is not a defined term in the code. Note, the same sentence is not italicized in Section 3008.14.1.

3008.13 Two-way communication system. Designers should not have to receive approval from an entire "department", and although the intent may be clear to some, we should consider using a more appropriate term. "Chief" (or, it could be "Marshal") is proposed to comport to the same term used in approving the location of the fire command center as required by Section 911.1.1. So, if the Fire Chief must approve the location of the fire command center, the same entity should also approve the "alternate location."

3008.14 Elevator system monitoring. Same reasoning as for Section 3008.13 above. Also, Sections 3008.13 and 3008.14.1 allow for "an alternate location"; therefore, the same should also apply to Section 3008.14, so "a central point" was replaced with the terms used previously. If "a central point" is preferred, then Sections 3008.13 and 3008.14.1 should be revised. The same terms and conditions should apply throughout.

This proposal has not been vetted through the 2009 IFC or other related code references, and any approved changes here would need to be changed in a corresponding manner in the other references.

Submittal Information

Date Submitted: April 16, 2009

The proposal may be submitted by email as an attachment, by fax, by mail, or by hand delivery.

Please submit the proposal to:

DHCD DBFR TASO (Technical Assistance and Services Office)
The Jackson Center
501 N. 2nd Street
Richmond, VA 23219-1321

Email Address: taso@dhcd.virginia.gov
Fax Number: (804) 371-7092
Phone Numbers: (804) 371-7140 or (804) 371-7150

ASME

American Society of Mechanical Engineers
Three Park Avenue
New York, NY 10016-5990

Standard reference number	Title	Referenced in code section number
A17.1/CSA B44—2007	Safety Code for Elevators and Escalators	907.3.3, 911.1.5, 1007.4, 1607.8.1, 1613.6.5, 3001.2, 3001.4, 3002.5, 3003.2, 3007.1, 3008.3, 3008.12, 3008.14.1, 3411.8.2
A18.1—2005	Safety Standard for Platform Lifts and Stairway Chairlifts	1109.7, 2702.2.6, 3411.8.3
A90.1—03	Safety Standard for Belt Manlifts	3001.2
B16.18—2001 (Reaffirmed 2005)	Cast Copper Alloy Solder Joint Pressure Fittings	909.13.1
B16.22—2001 (Reaffirmed 2005)	Wrought Copper and Copper Alloy Solder Joint Pressure Fittings	909.13.1
B20.1—2006	Safety Standard for Conveyors and Related Equipment	3001.2, 3005.3
B31.3—2004	Process Piping	415.8.6.1

ASTM

ASTM International
100 Barr Harbor Drive
West Conshohocken, PA 19428-2959

Standard reference number	Title	Referenced in code section number
A 36/A 36M—05	Specification for Carbon Structural Steel	1810.3.2.3
A 153/A 153M—05	Specification for Zinc Coating (Hot-dip) on Iron and Steel Hardware	2304.9.5
A 240/A 240M—07	Standard Specification for Chromium and Chromium-nickel Stainless Steel Plate, Sheet and Strip for Pressure Vessels and for General Applications	Table 1507.4.3(1)
A 252—98 (2002)	Specification for Welded and Seamless Steel Pipe Piles	1810.3.2.3
A 283/A 283M—03	Specification for Low and Intermediate Tensile Strength Carbon Steel Plates	1810.3.2.3
A 307—04e01	Specification for Carbon Steel Bolts and Studs, 60,000 psi Tensile Strength	1911.1
A 416/A 416M—06	Specification for Steel Strand, Uncoated Seven-wire for Prestressed Concrete	1810.3.2.2
A 463/A 463M—05	Standard Specification for Steel Sheet, Aluminum-coated, by the Hot-dip Process	Table 1507.4.3(2)
A 572/A 572M—07	Specification for High-strength Low-alloy Columbium-vanadium Structural Steel	1810.3.2.3
A 588/A 588M—05	Specification for High-strength Low-alloy Structural Steel with 50 ksi (345 MPa) Minimum Yield Point to 4 inches (100 mm) Thick	1810.3.2.3
A 615/A 615M—04a	Specification for Deformed and Plain Billet-steel Bars for Concrete Reinforcement	1708.2, 1810.3.10.2
A 653/A 653M—07	Specification for Steel Sheet, Zinc-coated Galvanized or Zinc-iron Alloy-coated Galvannealed by the Hot-dip Process	Table 1507.4.3(1), Table 1507.4.3(2), 2304.9.5.1
A 690/A 690M—07	Standard Specification for High-strength Low-alloy Nickel, Copper, Phosphorus Steel H-piles and Sheet Piling with Atmospheric Corrosion Resistance for Use in Marine Environments	1810.3.2.3
A 706/A 706M—05a	Specification for Low-alloy Steel Deformed and Plain Bars for Concrete Reinforcement	Table 1704.3, 1704.4.1, 2107.4, 2108.3
A 722/A 722M—07	Specification for Uncoated High-strength Steel Bar for Prestressing Concrete	1810.3.10.2
A 755/A 755M—07	Specification for Steel Sheet, Metallic-coated by the Hot-dip Process and Prepainted by the Coil-coating Process for Exterior Exposed Building Products	Table 1507.4.3(1), Table 1507.4.3(2)
A 792/A 792M—06a	Specification for Steel Sheet, 55% Aluminum-zinc Alloy-coated by the Hot-dip Process	Table 1507.4.3(1), Table 1507.4.3(2)
A 875/A 875M—06	Standard Specification for Steel Sheet Zinc-5 percent, Aluminum Alloy-coated by the Hot-dip Process	Table 1507.4.3(2)
A 913/A 913M—04	Specification for High-strength Low-alloy Steel Shapes of Structural Quality, Produced by Quenching and Self-tempering Process (QST)	1810.3.2.3
A 924/A 924M—07	Standard Specification for General Requirements for Steel Sheet, Metallic-coated by the Hot-dip Process	Table 1507.4.3(1)
A 992/A 992M—06a	Standard Specification for Structural Shapes	1810.3.2.3
B 42—02e01	Specification for Seamless Copper Pipe, Standard Sizes	909.13.1
B 43—98(2004)	Specification for Seamless Red Brass Pipe, Standard Sizes	909.13.1
B 68—02	Specification for Seamless Copper Tube, Bright Annealed (Metric)	909.13.1
B 88—03	Specification for Seamless Copper Water Tube	909.13.1
B 101—02	Specification for Lead-coated Copper Sheet and Strip for Building Construction	Table 1404.5.3, Table 1507.2.9.2, Table 1507.4.3(1)
B 209—06	Specification for Aluminum and Aluminum Alloy Steel and Plate	Table 1507.4.3(1)
B 251—02e01	Specification for General Requirements for Wrought Seamless Copper and Copper-alloy Tube	909.13.1

ASME A17.1a-2008/CSA B44a-08

Addenda to ASME A17.1-2007/ CSA B44-07

Safety Code for Elevators and Escalators

AN AMERICAN NATIONAL STANDARD

The American Society of Mechanical Engineers

CANADIAN STANDARDS ASSOCIATION

23

A9607A

421.3 Wind load requirements for manufactured homes. Manufactured homes shall be anchored to withstand the wind loads established by the federal regulation for the area in which the manufactured home is installed. For the purpose of this code, Wind Zone II of the federal regulation shall include the cities of Chesapeake, Norfolk, Portsmouth, and Virginia Beach.

Add Section 421.4 to the IBC to read:

421.4 Skirting requirements for manufactured homes. As used in this section, "skirting" means a weather-resistant material used to enclose the space from the bottom of the manufactured home to grade. Manufactured homes installed or relocated shall have skirting installed within 60 days of occupancy of the home. Skirting materials shall be durable, suitable for exterior exposures and installed in accordance with the manufacturer's installation instructions. Skirting shall be secured as necessary to ensure stability, to minimize vibrations, to minimize susceptibility to wind damage and to compensate for possible frost heave. Each manufactured home shall have a minimum of one opening in the skirting providing access to any water supply or sewer drain connections under the home. Such openings shall be a minimum of 18 inches (457 mm) in any dimension and not less than 3 square feet (.28 m^2) in area. The access panel or door shall not be fastened in a manner requiring the use of a special tool to open or remove the panel or door. On-site fabrication of the skirting by the owner or installer of the home shall be acceptable, provided that the material meets the requirements of this code.

Add Section 421.5 to the IBC to read:

421.5 Site work for industrialized buildings. Site work for the erection and installation of an industrialized building is generally subject to the requirements of the Virginia Industrialized Building Safety Regulations (13 VAC 5-91) and the building official has certain enforcement responsibilities under those regulations. To the extent that any aspect of the erection or installation of an industrialized building is not covered by those regulations, this code shall be applicable. In addition, all administrative requirements of this code for permits, inspections and certificates of occupancy are also applicable. The requirements of the IRC shall be permitted to be used for any construction work that is subject to this code where the industrialized building would be classified as a Group R-5 building.

Add Section 421.6 to the IBC to read:

421.6 Relocated industrialized buildings; alterations and additions. Industrialized buildings constructed prior to January 1, 1972 shall be subject to Section 117 when relocated. Alterations and additions to existing industrialized buildings shall be subject to pertinent provisions of this code. Building officials shall be permitted to require the submission of plans and specifications for the model to aid in the evaluation of the proposed alteration or addition. Such plans and specifications shall be permitted to be submitted in electronic or other available format acceptable to the building official.

CHAPTER 7

FIRE-RESISTANCE-RATED CONSTRUCTION

Add Section 701.2 to the IBC to read:

701.2 Fire-resistance assembly marking. Concealed fire walls, vertical fire separation assemblies, fire barriers, fire partitions and smoke barriers shall be designated above ceilings and on the inside of all ceiling access doors which provide access to such fire rated assemblies by signage having letters no smaller than 1 inch (25.4 mm) in height. Such signage shall indicate the fire-resistance rating of the assembly and the type of assembly and be provided at horizontal intervals of no more than 8 feet (2438 mm).

Note: An example of suggested formatting for the signage would be "ONE HOUR FIRE PARTITION."

Delete Sections 707.14.1 and 707.14.2 of the IBC, including all subsections of Section 707.14.2.

Add exception 4 to Section 715.4.3 of the IBC to read:

2. They shall terminate in a room having a use related to the purpose of the shaft. The room shall be separated from the remainder of the building by *fire barriers* constructed in accordance with Section 707 or *horizontal assemblies* constructed in accordance with Section 712, or both. The *fire-resistance rating* and opening protectives shall be at least equal to the protection required for the shaft enclosure.
3. They shall be protected by *approved fire dampers* installed in accordance with their listing at the lowest floor level within the shaft enclosure.

Exceptions:

1. The fire-resistance-rated room separation is not required, provided there are no openings in or penetrations of the shaft enclosure to the interior of the building except at the bottom. The bottom of the shaft shall be closed off around the penetrating items with materials permitted by Section 717.3.1 for draftstopping, or the room shall be provided with an *approved* automatic fire suppression system.
2. A shaft enclosure containing a refuse chute or laundry chute shall not be used for any other purpose and shall terminate in a room protected in accordance with Section 708.13.4.
3. The fire-resistance-rated room separation and the protection at the bottom of the shaft are not required provided there are no combustibles in the shaft and there are no openings or other penetrations through the shaft enclosure to the interior of the building.

708.12 Enclosure at the top. A shaft enclosure that does not extend to the underside of the roof sheathing, deck or slab of the building shall be enclosed at the top with construction of the same *fire-resistance rating* as the topmost floor penetrated by the shaft, but not less than the *fire-resistance rating* required for the shaft enclosure.

708.13 Refuse and laundry chutes. Refuse and laundry chutes, access and termination rooms and incinerator rooms shall meet the requirements of Sections 708.13.1 through 708.13.6.

Exception: Chutes serving and contained within a single *dwelling unit*.

708.13.1 Refuse and laundry chute enclosures. A shaft enclosure containing a refuse or laundry chute shall not be used for any other purpose and shall be enclosed in accordance with Section 708.4. Openings into the shaft, including those from access rooms and termination rooms, shall be protected in accordance with this section and Section 715. Openings into chutes shall not be located in *corridors*. Doors shall be self- or automatic-closing upon the actuation of a smoke detector in accordance with Section 715.4.8.3, except that heat-activated closing devices shall be permitted between the shaft and the termination room.

708.13.2 Materials. A shaft enclosure containing a refuse or laundry chute shall be constructed of materials as permitted by the building type of construction.

708.13.3 Refuse and laundry chute access rooms. Access openings for refuse and laundry chutes shall be located in rooms or compartments enclosed by not less than 1-hour *fire barriers* constructed in accordance with Section 707 or *horizontal assemblies* constructed in accordance with Section 712, or both. Openings into the access rooms shall be protected by opening protectives having a *fire protection rating* of not less than $^3/_4$ hour. Doors shall be self- or automatic-closing upon the detection of smoke in accordance with Section 715.4.8.3.

708.13.4 Termination room. Refuse and laundry chutes shall discharge into an enclosed room separated from the remainder of the building by not less than 1-hour *fire barriers* constructed in accordance with Section 707 or *horizontal assemblies* constructed in accordance with Section 712, or both. Openings into the termination room shall be protected by opening protectives having a *fire protection rating* of not less than $^3/_4$ hour. Doors shall be self- or automatic-closing upon the detection of smoke in accordance with Section 715.4.8.3. Refuse chutes shall not terminate in an incinerator room. Refuse and laundry rooms that are not provided with chutes need only comply with Table 508.2.5.

708.13.5 Incinerator room. Incinerator rooms shall comply with Table 508.2.5.

708.13.6 Automatic sprinkler system. An *approved automatic sprinkler system* shall be installed in accordance with Section 903.2.11.2.

708.14 Elevator, dumbwaiter and other hoistways. Elevator, dumbwaiter and other hoistway enclosures shall be constructed in accordance with Section 708 and Chapter 30.

708.14.1 Elevator lobby. An enclosed elevator lobby shall be provided at each floor where an elevator shaft enclosure connects more than three *stories*. The lobby enclosure shall separate the elevator shaft enclosure doors from each floor by *fire partitions*. In addition to the requirements in Section 709 for *fire partitions*, doors protecting openings in the elevator lobby enclosure walls shall also comply with Section 715.4.3 as required for *corridor* walls and penetrations of the elevator lobby enclosure by ducts and air transfer openings shall be protected as required for *corridors* in accordance with Section 716.5.4.1. Elevator lobbies shall have at least one *means of egress* complying with Chapter 10 and other provisions within this code.

Exceptions:

1. Enclosed elevator lobbies are not required at the street floor, provided the entire street floor is equipped with an *automatic sprinkler system* in accordance with Section 903.3.1.1.
2. Elevators not required to be located in a shaft in accordance with Section 708.2 are not required to have enclosed elevator lobbies.
3. Enclosed elevator lobbies are not required where additional doors are provided at the hoistway

25

opening in accordance with Section 3002.6. Such doors shall be tested in accordance with UL 1784 without an artificial bottom seal.

4. Enclosed elevator lobbies are not required where the building is protected by an *automatic sprinkler system* installed in accordance with Section 903.3.1.1 or 903.3.1.2. This exception shall not apply to the following:
   4.1. Group I-2 occupancies;
   4.2. Group I-3 occupancies; and
   4.3. High-rise buildings.
5. Smoke partitions shall be permitted in lieu of *fire partitions* to separate the elevator lobby at each floor where the building is equipped throughout with an *automatic sprinkler system* installed in accordance with Section 903.3.1.1 or 903.3.1.2. In addition to the requirements in Section 711 for smoke partitions, doors protecting openings in the smoke partitions shall also comply with Sections 711.5.2, 711.5.3, and 715.4.8 and duct penetrations of the smoke partitions shall be protected as required for *corridors* in accordance with Section 716.5.4.1.
6. Enclosed elevator lobbies are not required where the elevator hoistway is pressurized in accordance with Section 708.14.2.
7. Enclosed elevator lobbies are not required where the elevator serves only *open parking garages* in accordance with Section 406.3.

708.14.1.1 Areas of refuge. Areas of refuge shall be provided as required in Section 1007.

708.14.2 Enclosed elevator lobby. Where elevator hoistway pressurization is provided in lieu of required enclosed elevator lobbies, the pressurization system shall comply with this section.

708.14.2.1 Pressurization requirements. Elevator hoistways shall be pressurized to maintain a minimum positive pressure of 0.10 inches of water (25 Pa) and a maximum positive pressure of 0.25 inches of water (67 Pa) with respect to adjacent occupied space on all floors. This pressure shall be measured at the midpoint of each hoistway door, with all elevator cars at the floor of recall and all hoistway doors on the floor of recall open and all other hoistway doors closed. The opening and closing of hoistway doors at each level must be demonstrated during this test. The supply air intake shall be from an outside, uncontaminated source located a minimum distance of 20 feet (6096 mm) from any air exhaust system or outlet.

708.14.2.2 Rational analysis. A rational analysis complying with Section 909.4 shall be submitted with the *construction documents*.

708.14.2.3 Ducts for system. Any duct system that is part of the pressurization system shall be protected with the same *fire-resistance rating* as required for the elevator shaft enclosure.

708.14.2.4 Fan system. The fan system provided for the pressurization system shall be as required by this section.

708.14.2.4.1 Fire resistance. When located within the building, the fan system that provides the pressurization shall be protected with the same *fire-resistance rating* required for the elevator shaft enclosure.

708.14.2.4.2 Smoke detection. The fan system shall be equipped with a smoke detector that will automatically shut down the fan system when smoke is detected within the system.

708.14.2.4.3 Separate systems. A separate fan system shall be used for each elevator hoistway.

708.14.2.4.4 Fan capacity. The supply fan shall either be adjustable with a capacity of at least 1,000 cfm (.4719 m^3/s) per door, or that specified by a *registered design professional* to meet the requirements of a designed pressurization system.

708.14.2.5 Standby power. The pressurization system shall be provided with standby power from the same source as other required emergency systems for the building.

708.14.2.6 Activation of pressurization system. The elevator pressurization system shall be activated upon activation of the building fire alarm system or upon activation of the elevator lobby smoke detectors. Where both a building fire alarm system and elevator lobby smoke detectors are present, each shall be independently capable of activating the pressurization system.

708.14.2.7 Special inspection. *Special inspection* for performance shall be required in accordance with Section 909.18.8. System acceptance shall be in accordance with Section 909.19.

708.14.2.8 Marking and identification. Detection and control systems shall be marked in accordance with Section 909.14.

708.14.2.9 Control diagrams. Control diagrams shall be provided in accordance with Section 909.15.

708.14.2.10 Control panel. A control panel complying with Section 909.16 shall be provided.

708.14.2.11 System response time. Hoistway pressurization systems shall comply with the requirements for smoke control system response time in Section 909.17.

SECTION 709
FIRE PARTITIONS

709.1 General. The following wall assemblies shall comply with this section.

1. Walls separating *dwelling units* in the same building as required by Section 420.2.
2. Walls separating *sleeping units* in the same building as required by Section 420.2.
3. Walls separating tenant spaces in *covered mall buildings* as required by Section 402.7.2.

Where outdoor areas are to be used by persons in addition to the occupants of the building, and the path of egress travel from the outdoor areas passes through the building, *means of egress* requirements for the building shall be based on the sum of the *occupant loads* of the building plus the outdoor areas.

Exceptions:

1. Outdoor areas used exclusively for service of the building need only have one *means of egress*.
2. Both outdoor areas associated with Group R-3 and individual dwelling units of Group R-2.

1004.9 Multiple occupancies. Where a building contains two or more occupancies, the *means of egress* requirements shall apply to each portion of the building based on the occupancy of that space. Where two or more occupancies utilize portions of the same *means of egress* system, those egress components shall meet the more stringent requirements of all occupancies that are served.

SECTION 1005
EGRESS WIDTH

1005.1 Minimum required egress width. The *means of egress* width shall not be less than required by this section. The total width of *means of egress* in inches (mm) shall not be less than the total *occupant load* served by the *means of egress* multiplied by 0.3 inches (7.62 mm) per occupant for stairways and by 0.2 inches (5.08 mm) per occupant for other egress components. The width shall not be less than specified elsewhere in this code. Multiple *means of egress* shall be sized such that the loss of any one *means of egress* shall not reduce the available capacity to less than 50 percent of the required capacity. The maximum capacity required from any *story* of a building shall be maintained to the termination of the *means of egress*.

Exception: *Means of egress* complying with Section 1028.

1005.2 Door encroachment. Doors, when fully opened, and handrails shall not reduce the required *means of egress* width by more than 7 inches (178 mm). Doors in any position shall not reduce the required width by more than one-half. Other nonstructural projections such as trim and similar decorative features shall be permitted to project into the required width a maximum of $1^1/_2$ inches (38 mm) on each side.

Exception: The restrictions on a door swing shall not apply to doors within individual dwelling units and sleeping units of Group R-2 and dwelling units of Group R-3.

1005.3 Door hardware encroachment. Surface-mounted latch release hardware shall be exempt from inclusion in the 7-inch (178 mm) maximum projection requirement of Section 1005.2 when:

1. The hardware is mounted to the side of the door facing the corridor width when the door is in the open position; and
2. The hardware is mounted not less than 34 inches (865 mm) or more than 48 inches (1220 mm) above the finished floor.

SECTION 1006
MEANS OF EGRESS ILLUMINATION

1006.1 Illumination required. The *means of egress*, including the *exit discharge*, shall be illuminated at all times the building space served by the *means of egress* is occupied.

Exceptions:

1. Occupancies in Group U.
2. *Aisle accessways* in Group A.
3. Dwelling units and sleeping units in Groups R-1, R-2 and R-3.
4. Sleeping units of Group I occupancies.

1006.2 Illumination level. The *means of egress* illumination level shall not be less than 1 foot-candle (11 lux) at the walking surface.

Exception: For auditoriums, theaters, concert or opera halls and similar assembly occupancies, the illumination at the walking surface is permitted to be reduced during performances to not less than 0.2 foot-candle (2.15 lux), provided that the required illumination is automatically restored upon activation of a premises' fire alarm system where such system is provided.

1006.3 Illumination emergency power. The power supply for *means of egress* illumination shall normally be provided by the premises' electrical supply.

In the event of power supply failure, an emergency electrical system shall automatically illuminate all of the following areas:

1. *Aisles* and unenclosed egress *stairways* in rooms and spaces that require two or more *means of egress*.
2. *Corridors*, *exit enclosures* and *exit passageways* in buildings required to have two or more *exits*.
3. Exterior egress components at other than their *levels of exit discharge* until *exit discharge* is accomplished for buildings required to have two or more *exits*.
4. Interior *exit discharge* elements, as permitted in Section 1027.1, in buildings required to have two or more *exits*.
5. Exterior landings as required by Section 1008.1.6 for *exit discharge* doorways in buildings required to have two or more *exits*.

The emergency power system shall provide power for a duration of not less than 90 minutes and shall consist of storage batteries, unit equipment or an on-site generator. The installation of the emergency power system shall be in accordance with Chapter 27.

1006.4 Performance of system. Emergency lighting facilities shall be arranged to provide initial illumination that is at least an average of 1 foot-candle (11 lux) and a minimum at any point of 0.1 foot-candle (1 lux) measured along the path of egress at floor level. Illumination levels shall be permitted to decline to 0.6 foot-candle (6 lux) average and a minimum at any point of 0.06 foot-candle (0.6 lux) at the end of the emergency lighting time duration. A maximum-to-minimum illumination uniformity ratio of 40 to 1 shall not be exceeded.

TABLE 1005.1
EGRESS WIDTH PER OCCUPANT SERVED

OCCUPANCY	WITHOUT SPRINKLER SYSTEM		WITH SPRINKLER SYSTEM[a]	
	Stairways (inches per occupant)	Other egress components (inches per occupant)	Stairways (inches per occupant)	Other egress components (inches per occupant)
Occupancies other than those listed below	0.3	0.2	0.2	0.15
Hazardous: H-1, H-2, H-3 and H-4	0.7	0.4	0.3	0.2
Institutional: I-2	NA	NA	0.3	0.2

For SI: 1 inch = 25.4 mm. NA = Not applicable.

a. Buildings equipped throughout with an automatic sprinkler system in accordance with Section 903.3.1.1 or 903.3.1.2.

1005.2 Door encroachment. Doors opening into the path of egress travel shall not reduce the required width to less than one-half during the course of the swing. When fully open, the door shall not project more than 7 inches (178 mm) into the required width.

Exception: The restrictions on a door swing shall not apply to doors within individual dwelling units and sleeping units of Group R-2 and dwelling units of Group R-3.

SECTION 1006
MEANS OF EGRESS ILLUMINATION

1006.1 Illumination required. The means of egress, including the exit discharge, shall be illuminated at all times the building space served by the means of egress is occupied.

Exceptions:

1. Occupancies in Group U.
2. Aisle accessways in Group A.
3. Dwelling units and sleeping units in Groups R-1, R-2 and R-3.
4. Sleeping units of Group I occupancies.

1006.2 Illumination level. The means of egress illumination level shall not be less than 1 foot-candle (11 lux) at the walking surface level.

Exception: For auditoriums, theaters, concert or opera halls and similar assembly occupancies, the illumination at the walking surface level is permitted to be reduced during performances to not less than 0.2 foot-candle (2.15 lux), provided that the required illumination is automatically restored upon activation of a premises' fire alarm system where such system is provided.

1006.3 Illumination emergency power. The power supply for means of egress illumination shall normally be provided by the premises' electrical supply.

In the event of power supply failure, an emergency electrical system shall automatically illuminate the following areas:

1. Aisles and unenclosed egress stairways in rooms and spaces that require two or more means of egress.
2. Corridors, exit enclosures and exit passageways in buildings required to have two or more exits.
3. Exterior egress components at other than the level of exit discharge until exit discharge is accomplished for buildings required to have two or more exits.
4. Interior exit discharge elements, as permitted in Section 1024.1, in buildings required to have two or more exits.
5. Exterior landings, as required by Section 1008.1.5, for exit discharge doorways in buildings required to have two or more exits.

The emergency power system shall provide power for a duration of not less than 90 minutes and shall consist of storage batteries, unit equipment or an on-site generator. The installation of the emergency power system shall be in accordance with Section 2702.

1006.4 Performance of system. Emergency lighting facilities shall be arranged to provide initial illumination that is at least an average of 1 foot-candle (11 lux) and a minimum at any point of 0.1 foot-candle (1 lux) measured along the path of egress at floor level. Illumination levels shall be permitted to decline to 0.6 foot-candle (6 lux) average and a minimum at any point of 0.06 foot-candle (0.6 lux) at the end of the emergency lighting time duration. A maximum-to-minimum illumination uniformity ratio of 40 to 1 shall not be exceeded.

SECTION 1007
ACCESSIBLE MEANS OF EGRESS

1007.1 Accessible means of egress required. Accessible means of egress shall comply with this section. Accessible spaces shall be provided with not less than one accessible means of egress. Where more than one means of egress is required by Section 1015.1 or 1019.1 from any accessible space, each accessible portion of the space shall be served by not less than two accessible means of egress.

Exceptions:

1. Accessible means of egress are not required in alterations to existing buildings.
2. One accessible means of egress is required from an accessible mezzanine level in accordance with Section 1007.3, 1007.4 or 1007.5.
3. In assembly spaces with sloped floors, one accessible means of egress is required from a space where the common path of travel of the accessible route for access to the wheelchair spaces meets the requirements in Section 1025.8.

1007.2 Continuity and components. Each required accessible means of egress shall be continuous to a public way and shall consist of one or more of the following components:

1. Accessible routes complying with Section 1104.
2. Stairways within vertical exit enclosures complying with Sections 1007.3 and 1020.
3. Exterior exit stairways complying with Sections 1007.3 and 1023.
4. Elevators complying with Section 1007.4.

requirements of this section. An *exit passageway* shall not be used for any purpose other than as a *means of egress*.

1023.2 Width. The width of *exit passageways* shall be determined as specified in Section 1005.1 but such width shall not be less than 44 inches (1118 mm), except that *exit passageways* serving an *occupant load* of less than 50 shall not be less than 36 inches (914 mm) in width. The required width of *exit passageways* shall be unobstructed.

Exception: Doors complying with Section 1005.2.

1023.3 Construction. *Exit passageway* enclosures shall have walls, floors and ceilings of not less than 1-hour *fire-resistance rating*, and not less than that required for any connecting *exit enclosure*. *Exit passageways* shall be constructed as *fire barriers* in accordance with Section 707 or *horizontal assemblies* constructed in accordance with Section 712, or both.

1023.4 Termination. *Exit passageways* shall terminate at an *exit discharge* or a *public way*.

1023.5 Openings and penetrations. *Exit passageway* opening protectives shall be in accordance with the requirements of Section 715.

Except as permitted in Section 402.4.6, openings in *exit passageways* other than exterior openings shall be limited to those necessary for *exit access* to the *exit passageway* from normally occupied spaces and for egress from the *exit passageway*.

Where an *exit enclosure* is extended to an *exit discharge* or a *public way* by an *exit passageway*, the *exit passageway* shall also comply with Section 1022.2.1.

Elevators shall not open into an *exit passageway*.

1023.6 Penetrations. Penetrations into and openings through an *exit passageway* are prohibited except for required *exit* doors, equipment and ductwork necessary for independent pressurization, sprinkler piping, standpipes, electrical raceway for fire department communication and electrical raceway serving the *exit passageway* and terminating at a steel box not exceeding 16 square inches (0.010 m^2). Such penetrations shall be protected in accordance with Section 713. There shall be no penetrations or communicating openings, whether protected or not, between adjacent *exit passageways*.

SECTION 1024
LUMINOUS EGRESS PATH MARKINGS

1024.1 General. *Approved* luminous egress path markings delineating the exit path shall be provided in buildings of Groups A, B, E, I, M and R-1 having occupied floors located more than 75 feet (22 860 mm) above the lowest level of fire department vehicle access in accordance with Sections 1024.1 through 1024.5.

Exceptions:

1. Luminous egress path markings shall not be required on the *level of exit discharge* in lobbies that serve as part of the exit path in accordance with Section 1027.1, Exception 1.
2. Luminous egress path markings shall not be required in areas of *open parking garages* that serve as part of the exit path in accordance with Section 1027.1, Exception 3.

1024.2 Markings within exit enclosures. Egress path markings shall be provided in *exit enclosures*, including vertical *exit enclosures* and *exit passageways*, in accordance with Sections 1024.2.1 through 1024.2.6.

1024.2.1 Steps. A solid and continuous stripe shall be applied to the horizontal leading edge of each step and shall extend for the full length of the step. Outlining stripes shall have a minimum horizontal width of 1 inch (25 mm) and a maximum width of 2 inches (51 mm). The leading edge of the stripe shall be placed at a maximum of $^1/_2$ inch (13 mm) from the leading edge of the step and the stripe shall overlap the leading edge of the step by not more than $^1/_2$ inch (13 mm) down the vertical face of the step.

Exception: The minimum width of 1 inch (25 mm) shall not apply to outlining stripes *listed* in accordance with UL 1994.

1024.2.2 Landings. The leading edge of landings shall be marked with a stripe consistent with the dimensional requirements for steps.

1024.2.3 Handrails. All *handrails* and *handrail* extensions shall be marked with a solid and continuous stripe having a minimum width of 1 inch (25 mm). The stripe shall be placed on the top surface of the *handrail* for the entire length of the *handrail*, including extensions and newel post caps. Where *handrails* or *handrail* extensions bend or turn corners, the stripe shall not have a gap of more than 4 inches (102 mm).

Exception: The minimum width of 1 inch (25 mm) shall not apply to outlining stripes *listed* in accordance with UL 1994.

1024.2.4 Perimeter demarcation lines. *Stair* landings and other floor areas within *exit enclosures*, with the exception of the sides of steps, shall be provided with solid and continuous demarcation lines on the floor or on the walls or a combination of both. The stripes shall be 1 to 2 inches (25 mm to 51 mm) wide with interruptions not exceeding 4 inches (102 mm).

Exception: The minimum width of 1 inch (25 mm) shall not apply to outlining stripes *listed* in accordance with UL 1994.

1024.2.4.1 Floor-mounted demarcation lines. Perimeter demarcation lines shall be placed within 4 inches (102 mm) of the wall and shall extend to within 2 inches (51 mm) of the markings on the leading edge of landings. The demarcation lines shall continue across the floor in front of all doors.

Exception: Demarcation lines shall not extend in front of *exit* doors that lead out of an *exit enclosure* and through which occupants must travel to complete the exit path.

1024.2.4.2 Wall-mounted demarcation lines. Perimeter demarcation lines shall be placed on the wall with the bottom edge of the stripe no more than 4 inches (102 mm) above the finished floor. At the top or bottom of the

stairs, demarcation lines shall drop vertically to the floor within 2 inches (51 mm) of the step or landing edge. Demarcation lines on walls shall transition vertically to the floor and then extend across the floor where a line on the floor is the only practical method of outlining the path. Where the wall line is broken by a door, demarcation lines on walls shall continue across the face of the door or transition to the floor and extend across the floor in front of such door.

Exception: Demarcation lines shall not extend in front of *exit* doors that lead out of an *exit enclosure* and through which occupants must travel to complete the exit path.

1024.2.4.3 Transition. Where a wall-mounted demarcation line transitions to a floor-mounted demarcation line, or vice versa, the wall-mounted demarcation line shall drop vertically to the floor to meet a complementary extension of the floor-mounted demarcation line, thus forming a continuous marking.

1024.2.5 Obstacles. Obstacles at or below 6 feet 6 inches (1981 mm) in height and projecting more than 4 inches (102 mm) into the egress path shall be outlined with markings no less than 1 inch (25 mm) in width comprised of a pattern of alternating equal bands, of luminescent luminous material and black, with the alternating bands no more than 2 inches (51 mm) thick and angled at 45 degrees (0.79 rad). Obstacles shall include, but are not limited to, standpipes, hose cabinets, wall projections and restricted height areas. However, such markings shall not conceal any required information or indicators including, but not limited to, instructions to occupants for the use of standpipes.

1024.2.6 Doors from exit enclosures. Doors through which occupants within an *exit enclosure* must pass in order to complete the exit path shall be provided with markings complying with Sections 1024.2.6.1 through 1024.2.6.3.

1024.2.6.1 Emergency exit symbol. The doors shall be identified by a low-location luminous emergency exit symbol complying with NFPA 170. The exit symbol shall be a minimum of 4 inches (102 mm) in height and shall be mounted on the door, centered horizontally, with the top of the symbol no higher than 18 inches (457 mm) above the finished floor.

1024.2.6.2 Door hardware markings. Door hardware shall be marked with no less than 16 square inches (406 mm^2) of luminous material. This marking shall be located behind, immediately adjacent to or on the door handle and/or escutcheon. Where a panic bar is installed, such material shall be no less than 1 inch (25 mm) wide for the entire length of the actuating bar or touchpad.

1024.2.6.3 Door frame markings. The top and sides of the door frame shall be marked with a solid and continuous 1 inch to 2 inch (25 mm to 51 mm) wide stripe. Where the door molding does not provide sufficient flat surface on which to locate the stripe, the stripe shall be permitted to be located on the wall surrounding the frame.

1024.3 Uniformity. Placement and dimensions of markings shall be consistent and uniform throughout the same *exit enclosure*.

1024.4 Self-luminous and photoluminescent. Luminous egress path markings shall be permitted to be made of any material, including paint, provided that an electrical charge is not required to maintain the required luminance. Such materials shall include, but are not limited to, *self-luminous* materials and *photoluminescent* materials. Materials shall comply with either:

1. UL 1994; or
2. ASTM E 2072, except that the charging source shall be 1 foot-candle (11 lux) of fluorescent illumination for 60 minutes, and the minimum luminance shall be 30 millicandelas per square meter at 10 minutes and 5 millicandelas per square meter after 90 minutes.

1024.5 Illumination. *Exit enclosures* where photoluminescent exit path markings are installed shall be provided with the minimum *means of egress* illumination required by Section 1006 for at least 60 minutes prior to periods when the building is occupied.

SECTION 1025
HORIZONTAL EXITS

1025.1 Horizontal exits. *Horizontal exits* serving as an *exit* in a *means of egress* system shall comply with the requirements of this section. A *horizontal exit* shall not serve as the only *exit* from a portion of a building, and where two or more *exits* are required, not more than one-half of the total number of *exits* or total *exit* width shall be *horizontal exits*.

Exceptions:

1. *Horizontal exits* are permitted to comprise two-thirds of the required *exits* from any building or floor area for occupancies in Group I-2.
2. *Horizontal exits* are permitted to comprise 100 percent of the *exits* required for occupancies in Group I-3. At least 6 square feet (0.6 m^2) of accessible space per occupant shall be provided on each side of the *horizontal exit* for the total number of people in adjoining compartments.

1025.2 Separation. The separation between buildings or refuge areas connected by a *horizontal exit* shall be provided by a *fire wall* complying with Section 706; or it shall be provided by a *fire barrier* complying with Section 707 or a *horizontal assembly* complying with Section 712, or both. The minimum *fire-resistance rating* of the separation shall be 2 hours. Opening protectives in *horizontal exits* shall also comply with Section 715. Duct and air transfer openings in a *fire wall* or *fire barrier* that serves as a *horizontal exit* shall also comply with Section 716. The *horizontal exit* separation shall extend vertically through all levels of the building unless floor assemblies have a *fire-resistance rating* of not less than 2 hours with no unprotected openings.

Exception: A *fire-resistance rating* is not required at *horizontal exits* between a building area and an above-grade

421.3 Wind load requirements for manufactured homes. Manufactured homes shall be anchored to withstand the wind loads established by the federal regulation for the area in which the manufactured home is installed. For the purpose of this code, Wind Zone II of the federal regulation shall include the cities of Chesapeake, Norfolk, Portsmouth, and Virginia Beach.

Add Section 421.4 to the IBC to read:

421.4 Skirting requirements for manufactured homes. As used in this section, "skirting" means a weather-resistant material used to enclose the space from the bottom of the manufactured home to grade. Manufactured homes installed or relocated shall have skirting installed within 60 days of occupancy of the home. Skirting materials shall be durable, suitable for exterior exposures and installed in accordance with the manufacturer's installation instructions. Skirting shall be secured as necessary to ensure stability, to minimize vibrations, to minimize susceptibility to wind damage and to compensate for possible frost heave. Each manufactured home shall have a minimum of one opening in the skirting providing access to any water supply or sewer drain connections under the home. Such openings shall be a minimum of 18 inches (457 mm) in any dimension and not less than 3 square feet (.28 m²) in area. The access panel or door shall not be fastened in a manner requiring the use of a special tool to open or remove the panel or door. On-site fabrication of the skirting by the owner or installer of the home shall be acceptable, provided that the material meets the requirements of this code.

Add Section 421.5 to the IBC to read:

421.5 Site work for industrialized buildings. Site work for the erection and installation of an industrialized building is generally subject to the requirements of the Virginia Industrialized Building Safety Regulations (13 VAC 5-91) and the building official has certain enforcement responsibilities under those regulations. To the extent that any aspect of the erection or installation of an industrialized building is not covered by those regulations, this code shall be applicable. In addition, all administrative requirements of this code for permits, inspections and certificates of occupancy are also applicable. The requirements of the IRC shall be permitted to be used for any construction work that is subject to this code where the industrialized building would be classified as a Group R-5 building.

Add Section 421.6 to the IBC to read:

421.6 Relocated industrialized buildings; alterations and additions. Industrialized buildings constructed prior to January 1, 1972 shall be subject to Section 117 when relocated. Alterations and additions to existing industrialized buildings shall be subject to pertinent provisions of this code. Building officials shall be permitted to require the submission of plans and specifications for the model to aid in the evaluation of the proposed alteration or addition. Such plans and specifications shall be permitted to be submitted in electronic or other available format acceptable to the building official.

CHAPTER 7

FIRE-RESISTANCE-RATED CONSTRUCTION

Add Section 701.2 to the IBC to read:

701.2 Fire-resistance assembly marking. Concealed fire walls, vertical fire separation assemblies, fire barriers, fire partitions and smoke barriers shall be designated above ceilings and on the inside of all ceiling access doors which provide access to such fire rated assemblies by signage having letters no smaller than 1 inch (25.4 mm) in height. Such signage shall indicate the fire-resistance rating of the assembly and the type of assembly and be provided at horizontal intervals of no more than 8 feet (2438 mm).

Note: An example of suggested formatting for the signage would be "ONE HOUR FIRE PARTITION."

Delete Sections 707.14.1 and 707.14.2 of the IBC, including all subsections of Section 707.14.2.

Add exception 4 to Section 715.4.3 of the IBC to read:

restrained classification in accordance with ASTM E 119 or UL 263. Restrained construction shall be identified on the plans.

703.3 Alternative methods for determining fire resistance. The application of any of the alternative methods listed in this section shall be based on the fire exposure and acceptance criteria specified in ASTM E 119 or UL 263. The required *fire resistance* of a building element, component or assembly shall be permitted to be established by any of the following methods or procedures:

1. Fire-resistance designs documented in sources.
2. Prescriptive designs of fire-resistance-rated building elements, components or assemblies as prescribed in Section 720.
3. Calculations in accordance with Section 721.
4. Engineering analysis based on a comparison of building element, component or assemblies designs having *fire-resistance ratings* as determined by the test procedures set forth in ASTM E 119 or UL 263.
5. Alternative protection methods as allowed by Section 104.11.

703.4 Noncombustibility tests. The tests indicated in Sections 703.4.1 and 703.4.2 shall serve as criteria for acceptance of building materials as set forth in Sections 602.2, 602.3 and 602.4 in Type I, II, III and IV construction. The term "noncombustible" does not apply to the flame spread characteristics of *interior finish* or *trim* materials. A material shall not be classified as a noncombustible building construction material if it is subject to an increase in combustibility or flame spread beyond the limitations herein established through the effects of age, moisture or other atmospheric conditions.

703.4.1 Elementary materials. Materials required to be noncombustible shall be tested in accordance with ASTM E 136.

703.4.2 Composite materials. Materials having a structural base of noncombustible material as determined in accordance with Section 703.4.1 with a surfacing not more than 0.125 inch (3.18 mm) thick that has a *flame spread index* not greater than 50 when tested in accordance with ASTM E 84 or UL 723 shall be acceptable as noncombustible materials.

703.5 Fire-resistance-rated glazing. Fire-resistance-rated glazing, when tested in accordance with ASTM E 119 or UL 263 and complying with the requirements of Section 707, shall be permitted. Fire-resistance-rated glazing shall bear a *label* or other identification showing the name of the manufacturer, the test standard and the identifier "W-XXX," where the "XXX" is the *fire-resistance rating* in minutes. Such *label* or identification shall be issued by an agency and shall be permanently affixed to the glazing.

703.6 Marking and identification. *Fire walls*, *fire barriers*, *fire partitions*, *smoke barriers* and smoke partitions or any other wall required to have protected openings or penetrations shall be effectively and permanently identified with signs or stenciling. Such identification shall:

1. Be located in accessible concealed floor, floor-ceiling or *attic* spaces;
2. Be repeated at intervals not exceeding 30 feet (914 mm) measured horizontally along the wall or partition; and
3. Include lettering not less than 0.5 inch (12.7 mm) in height, incorporating the suggested wording: "FIRE AND/OR SMOKE BARRIER—PROTECT ALL OPENINGS," or other wording.

Exception: Walls in Group R-2 occupancies that do not have a removable decorative ceiling allowing access to the concealed space.

SECTION 704
FIRE-RESISTANCE RATING OF STRUCTURAL MEMBERS

704.1 Requirements. The *fire-resistance ratings* of structural members and assemblies shall comply with this section and the requirements for the type of construction as specified in Table 601. The *fire-resistance ratings* shall not be less than the ratings required for the fire-resistance-rated assemblies supported by the structural members.

Exception: *Fire barriers*, *fire partitions*, *smoke barriers* and *horizontal assemblies* as provided in Sections 707.5, 709.4, 710.4 and 712.4, respectively.

704.2 Column protection. Where columns are required to be fire-resistance rated, the entire column shall be provided individual encasement protection by protecting it on all sides for the full column length, including connections to other structural members, with materials having the required *fire-resistance rating*. Where the column extends through a ceiling, the encasement protection shall be continuous from the top of the foundation or floor/ceiling assembly below through the ceiling space to the top of the column.

704.3 Protection of the primary structural frame other than columns. Members of the primary structural frame other than columns that are required to have a *fire-resistance rating* and support more than two floors or one floor and roof, or support a *load-bearing wall* or a nonload-bearing wall more than two *stories* high, shall be provided individual encasement protection by protecting them on all sides for their full length, including connections to other structural members, with materials having the required *fire-resistance* rating.

Exception: Individual encasement protection on all sides shall be permitted on all exposed sides provided the extent of protection is in accordance with the required *fire-resistance rating*, as determined in Section 703.

704.4 Protection of secondary members. Secondary members that are required to have a *fire-resistance rating* shall be protected by individual encasement protection, by the membrane or ceiling of a *horizontal assembly* in accordance with Section 712, or by a combination of both.

VIRGINIA DEPARTMENT OF HOUSING AND COMMUNITY DEVELOPMENT
DIVISION OF BUILDING AND FIRE REGULATION

Code Change Form for the 2009 Code Change Cycle

Code Change Number:_____

Proponent Information (Check one): ☐ Individual ☐ Government Entity ☒ Company

Name: J. Kenneth Payne, Jr., AIA Representing: VSAIA

Mailing Address: 3200 Norfolk Street, Richmond, Virginia 23230

Email Address: kpayne@moseleyarchitects.com Telephone Number: 804-794-7555

Proposal Information

Code(s) and Section(s): 2009 IBC, Section 703.6 – Marking and identification of fire-resistive walls and partitions

Proposed Change (including all relevant section numbers, if multiple sections):

703.6 Marking and identification. *Fire walls, fire barriers, fire partitions, smoke barriers* and smoke partitions or any other wall required to have protected openings or penetrations shall be effectively and permanently identified with signs or stenciling.

Exception: Walls in Group R-2 occupancies that do not have a removable decorative ceiling allowing access to the concealed space.

Such identification shall comply with all of the following:

1. Be located in accessible concealed floor, floor-ceiling or attic spaces.
2. Be repeated at intervals not exceeding 30 feet (914 mm) measured horizontally along the wall or partition.
3. Include lettering not less than 0.5 inch (12.7 mm) in height, incorporating the suggested wording: "FIRE AND/OR SMOKE BARRIER—PROTECT ALL OPENINGS," or other wording.

Supporting Statement (including intent, need, and impact of the proposal):

Restructuring the paragraph appears to achieve the intended result, which is for the "exception" to apply to the need for identification. As currently written in the 2009 IBC, it appears the "exception" applies only to #3...but #1 and #2 conditions would still be required. The added text clarifies all three conditions must be met.

Submittal Information

Date Submitted: April 13, 2009

The proposal may be submitted by email as an attachment, by fax, by mail, or by hand delivery.

Please submit the proposal to:

DHCD DBFR TASO (Technical Assistance and Services Office)
The Jackson Center
501 N. 2nd Street
Richmond, VA 23219-1321

Email Address: taso@dhcd.virginia.gov
Fax Number: (804) 371-7092
Phone Numbers: (804) 371-7140 or (804) 371-7150

VIRGINIA DHCD

VIRGINIA DEPARTMENT OF HOUSING AND COMMUNITY DEVELOPMENT
DIVISION OF BUILDING AND FIRE REGULATION

Code Change Form for the 2009 Code Change Cycle

Code Change Number:_____

Proponent Information (Check one): ☒Individual ☐Government Entity ☐Company

Name: Jason Gill

Representing: East Coast Fire Protection

Mailing Address: 3017 Vernon Road, Richmond, VA 23228

Email Address: jgill@ecfp.com

Telephone Number: 804-222-1381

Proposal Information

Code(s) and Section(s): Virginia Construction Code 905.2 (Exception)

Proposed Change (including all relevant section numbers, if multiple sections):
Current exception reads: "The residual pressure of 100 psi for 2 1/2" hose connection and 65 psi for 1 1/2" hose connection is not required in buildings equipped throughout with an automatic sprinkler system in accordance with Section 903.3.1.1 and where the highest floor level is not more than 150' above the lowest level of fire department vehicle access."

Change exception to read: "The residual pressure of 100 psi for 2 1/2" hose connection and 65 psi for 1 1/2" hose connection is not required in buildings equipped throughout with an automatic sprinkler system in accordance with Section 903.3.1.1 or 903.3.1.2 and where the highest floor level is not more than 150' above the lowest level of fire department vehicle access."

Supporting Statement (including intent, need, and impact of the proposal):
Section 903.3.1.1 is strictly for NFPA 13 systems only. However, NFPA does not differentiate between NFPA 13 or 13R with respect to the requirement for standpipes. Rather, NFPA only requires standpipes based on building height. The exception to 905.2 acknowledges that the fire department is capable of pressurizing the standpipes with adequate pressure up to 150'. This allows for 100 psi at the the 150' level when the system is pressurized with 175psi at the fire department connection (65psi loss for 150' of elevation and 10psi for friction loss). NFPA 13R systems should be allowed the same exception since 13R is only allowed for buildings of 4 stories or less.

Submittal Information

Date Submitted: 4-7-09

The proposal may be submitted by email as an attachment, by fax, by mail, or by hand delivery.

Please submit the proposal to:

DHCD DBFR TASO (Technical Assistance and Services Office)
The Jackson Center
501 N. 2nd Street
Richmond, VA 23219-1321

Email Address: taso@dhcd.virginia.gov
Fax Number: (804) 371-7092
Phone Numbers: (804) 371-7140 or (804) 371-7150

VIRGINIA DHCD

Reason. Part I. To better meet the intent of this exception, which is to allow voluntary improvements that do not necessarily bring the whole structure "up to code," as might otherwise be required by 3403.2.3.2(IEBC 302.2.3.2),

- The initial paragraph is revised editorially to make it explicit language, to remove improper references to ASCE 7, and to refer more generally to "improvement" as opposed to simply increased strength or stiffness.
- The initial paragraph is supplemented to include voluntary improvements to seismic bracing of nonstructural components, which are as common and as effective at reducing earthquake risk as are structural retrofits.
- Current items 1, 2, and 6 are replaced by a more general requirement that the voluntary improvement must leave the building "no less conforming". This is the intent of the exception expressed most clearly and directly. The "no less conforming" standard allows for greater creativity and design flexibility in the service of improved performance and reduced risk.
- Current item 1 is well-intentioned but can be contrary to the intent of the exception. Consider, for example, the installation of a steel frame as a backup system to prevent collapse of an inadequate stucco shear wall in the first story of an existing building. If the replacement involves demolition of some of the existing shear wall, that would represent a reduction in capacity and would therefore not be allowed by the current provision even though the altered structure would certainly be more safe. Similarly, the current provision would appear to prevent the minor demolition or modification of existing elements in order to install load path elements such as hold-downs, collectors, or out-of-plane wall anchors. The proposed language would allow these reasonable improvements.

Cost Impact: The code change proposal will not increase the cost of construction.

Analysis: A concern is if the last sentence of the proposed IEBC Section 807.7 would conflict with IEBC Section 101.7.

PART I – IBC STRUCTURAL **Approved as Submitted**
Committee Action:

Committee Reason: The proposal clarifies the intent of the Exception to Section 3403.2.3.2 which allows voluntary seismic upgrades to a building's seismic-force-resisting system without fully complying with the earthquake load provision.

Assembly Action: **None**

G214-07/08, Part I

3409.1 (IEBC [B] 308.1), 3409.4 (IEBC [B] 308.4), 3409.4.1 (IEBC [B] 308.4.1), 3409.4.2 (IEBC [B] 308.4.2), 3409.5 (IEBC [B] 308.5), 3409.6 (IEBC [B] 308.6), 3409.7 (IEBC [B] 308.7) (New), 3409.8 (IEBC [B] 308.8), 3409.8.7 (IEBC [B] 308.8.7); IEBC 605.1, 605.1.8, 605.1.9 (New), 706.3, 912.8, 1005.1, 1005.2 (New)

THIS CODE CHANGE WILL BE HEARD ON THE IBC MEANS OF EGRESS PORTION OF THE HEARING ORDER.

Proposed Change as Submitted:

Proponent: Cheryl Kent, U.S. Department of Housing and Urban Development (HUD)

PART I – IBC MEANS OF EGRESS

1. Revise as follows:

3409.1 (IEBC 308.1) (Supp) Scope. The provisions of Sections 3409.1 through ~~3409.9~~ 3409.10 apply to maintenance, change of occupancy, additions and alterations to existing buildings, including those identified as historic buildings.

~~**Exception:** Type B dwelling or sleeping units required by Section 1107 are not required to be provided in existing buildings and facilities being altered or undergoing a change of occupancy.~~

3409.4 (IEBC 308.4) (Supp) Change of occupancy. Existing buildings that undergo a change of group or occupancy shall comply with this section.

Exception: Type B dwelling or sleeping units required by Section 1107 are not required to be provided in existing buildings and facilities undergoing a change of occupancy.

3409.4.1 (IEBC 308.4.1) (Supp) Partial change in occupancy. Where a portion of the building is changed to a new occupancy classification, any alterations shall comply with Sections 3409.6, 3409.7 and 3409.8.

3409.4.2 (IEBC 308.4.2) (Supp) Complete change of occupancy. Where an entire building undergoes a change of occupancy, it shall comply with Section 3409.4.1 and shall have all of the following accessible features:

1. At least one accessible building entrance.
2. At least one accessible route from an accessible building entrance to primary function areas.
3. Signage complying with Section 1110.
4. Accessible parking, where parking is being provided.
5. At least one accessible passenger loading zone, when loading zones are provided.
6. At least one accessible route connecting accessible parking and accessible passenger loading zones to an accessible entrance.

Where it is technically infeasible to comply with the new construction standards for any of these requirements for a change of group or occupancy, the above items shall conform to the requirements to the maximum extent technically feasible.

3409.5 (IEBC 308.5) Additions. Provisions for new construction shall apply to additions. An addition that affects the accessibility to, or contains an area of, a primary function shall comply with the requirements in Section 3409.8~~7~~.

Exception: Where Group I-1, I-2, I-3 or R dwelling or sleeping units are being added, the requirements of Section 1107 for dwelling units or sleeping units and Section 907 for visible alarms apply where the quantity of units being added is four or more.

3409.6 (IEBC 308.6) (Supp) Alterations. A building, facility or element that is altered shall comply with the applicable provisions in Chapter 11 and ICC A117.1, unless technically infeasible. Where compliance with this section is technically infeasible, the alteration shall provide access to the maximum extent technically feasible.

Exceptions:

1. The altered element or space is not required to be on an accessible route, unless required by Section 3409.7.
2. Accessible means of egress required by Chapter 10 are not required to be provided in existing buildings and facilities.
3. The alteration to Type A individually owned dwelling units within a Group R-2 occupancy shall meet the provision for a Type B dwelling unit and shall comply with the applicable provisions in Chapter 11 and ICC A117.1.
4. Type A dwelling units or sleeping units required by Section 1107 are not required to be provided in existing building and facilities being altered.

2. Add new text as follows:

3409.7 (IEBC 308.7) Alterations in Group I-1, I-2 and R, and in structures, facilities, or elements serving Groups I or R. Where Group I-1, I-2 and R occupancies are altered the entire structure shall comply with the applicable provisions of Section 1107. Additionally, where structures, facilities, or elements serving Groups I-1, I-2 and R occupancies are altered the entire structure shall comply with Section 1107.

Exceptions:

1. Structures built for first occupancy before March 13, 1991 are not required to provide Type B units.
2. Type B units are not required to be provided where Type B dwelling units and sleeping units were not required at the time of first occupancy in structures designed and constructed after March 13, 1991.
3. Structures that are not required to provide Type B dwelling units and structures not serving Type B dwelling units in accordance with Section 1107 shall comply with Section 3409.6.
4. Alterations limited to one individually owned dwelling unit or sleeping unit shall comply with Section 3409.6.

3. Revise as follows:

~~3409.7 (IEBC 308.7)~~ 3409.8 (IEBC 308.8) Alterations affecting an area containing a primary function. Where an alteration affects the accessibility to, or contains an area of primary function, the route to the primary function area shall be accessible. The accessible route to the primary function area shall include toilet facilities or drinking fountains serving the area of primary function.

36

Exceptions:

1. The costs of providing the accessible route are not required to exceed 20 percent of the costs of the alterations affecting the area of primary function.
2. This provision does not apply to alterations limited solely to windows, hardware, operating controls, electrical outlets and signs.
3. This provision does not apply to alterations limited solely to mechanical systems, electrical systems, installation or alteration of fire protection systems and abatement of hazardous materials.
4. This provision does not apply to alterations undertaken for the primary purpose of increasing the accessibility of an existing building, facility or element.

(Renumber subsequent sections)

~~3409.8.7 (IEBC 308.8.7)~~ 3409.9.7 (IEBC 308.9.7) (Supp) Accessible dwelling or sleeping units. Where Group I-1, I-2, I-3, R-1, R-2 or R-4 dwelling or sleeping units are being altered or added, the requirements of Section 1107 for Accessible units and Section 907 for visible alarms apply only to the quantity of spaces being altered or added.

Reason: Change to Section 3409.1 Scope: The purpose of this code change is to clarify misleading and potentially inaccurate scoping requirements in the IBC and IEBC.

The exception in the main scoping paragraph of Section 3409 (IEBC 308.1) is too broad and is, therefore, misleading because it deals with the entire section and makes it appear that there are NO requirements for Type B dwelling units and sleeping units intended to be occupied as a residence, which is not true. Scoping requirements for Type B dwelling units and sleeping units intended to be occupied as a residence in the IBC are intended to reflect the federal Fair Housing Act's accessible design and construction requirements, which apply, without question, to additions to buildings having 4 or more units. There is also ambiguity in the code with respect to how the term "existing structure" is defined. Therefore, requirements for Type B dwelling units and sleeping units intended to be occupied as a residence need to be addressed under each subsection of Section 3409 (IEBC 308).

New Section 3409.7 (renumber accordingly) and New Section 3409.8.7: The purpose of these changes is to ensure that buildings covered by the Fair Housing Act's accessible design and construction requirements and which were not built in compliance, and which also, therefore, do not meet current code requirements for accessibility, are brought up to code.

Many residential structures and facilities serving residential uses that were built after March 13, 1991 and before IBC 2003 (the first building code safe harbor without a supplement) were not built in compliance with the design and construction requirements of the federal Fair Housing Act. Developers are beginning to renovate these facilities. They may not realize that the facilities do not comply with the Fair Housing Act. Therefore, those buildings constructed during the 12 year period prior to the 2003 IBC (1991 through 2003) that are subject to the Fair Housing Act's design and construction requirements must be brought into compliance during any alteration.

New Exception 5 at Section 3409.8 Section 1107.4 which is referenced by proposed new Section 3409.7 requires an accessible route to serve dwelling units and sleeping units. Therefore, an additional path of travel requirement which requires an accessible route serving altered dwelling units and sleeping units would be redundant. Adding a new Exception 5 to exempt Type B dwelling units and sleeping units addresses this concern.

New Exception at 3409.9.7 The purpose of these changes is to ensure that buildings covered by the Fair Housing Act's accessible design and construction requirements and which were not built in compliance, and which also, therefore, do not meet current code requirements for accessibility, are brought up to code.

Many residential structures and facilities serving residential uses that were built after March 13, 1991 and before IBC 2003 (the first building code safe harbor without a supplement) were not built in compliance with the design and construction requirements of the federal Fair Housing Act. Developers are beginning to renovate these facilities. They may not realize that the facilities do not comply with the Fair Housing Act. Therefore, those buildings constructed during the 12 year period prior to the 2003 IBC (1991 through 2003) that are subject to the Fair Housing Act's design and construction requirements must be brought into compliance during any alteration.

Cost Impact: Change to Section 3409.1 - No cost impact involved since this change will correct inaccurate scoping requirements in IBC 3409.1 (IEBC 308.1).

Changes to Sections 3409.7 (new) and 3409.8.7 will not increase the cost of construction as they are intended to ensure that buildings covered by the Fair Housing Act's design and construction requirements reflect those requirements.

PART I – IBC MEANS OF EGRESS

Committee Action: **Disapproved**

Committee Reason: It is overly restrictive to require an existing building to come into full compliance when only a portion is being altered. This also would be a conflict with Section 3409.3 which states that only the portions of a building being altered must comply with new provisions; this is the philosophy of the code in dealing with existing buildings. Enforcement of this provision would be political suicide for a building official who tried to enforce these provisions. The ADA has a 20% limit for additional costs – there are no limits for the cost of compliance for this provision, therefore it could be impractical to require full compliance. It needs to be clarified what level of alterations has to be undertaken to require this. In addition, the technical requirements in ICC A117.1 keep changing for Type B units. A building could have complied when constructed and would now be considered non-compliant. A consistent benchmark must be addressed.

Assembly Action: **None**

Individual Consideration Agenda

This item is on the agenda for individual consideration because a public comment was submitted.

Public Comment:

Cheryl Kent, U.S. Department of Housing and Urban Development (HUD), requests Approval as Modified by this public comment for Part I.

Modify proposal as follows:

3409.7 (IEBC 308.7) Alterations in Group I-1, I-2 and R, and in structures, facilities, or elements serving Groups I or R. Where four or more dwelling units or sleeping units intended to be occupied as a residence in Group I-1, I-2 and R occupancies are altered the ~~entire structure~~ altered building, facility or element shall comply with the applicable provisions of Section 1107. Additionally, where structures, facilities, or elements serving Groups I-1, I-2 and R occupancies are altered the altered ~~entire~~ structures, facilities or elements shall comply with Section 1107.

Exceptions:

1. Structures built for first occupancy before March 13, 1991 are not required to provide Type B units.
2. Type B units are not required to be provided where Type B dwelling units and sleeping units were not required at the time of first occupancy in structures designed and constructed after March 13, 1991.
3. Structures that are not required to provide Type B dwelling units and structures not serving Type B dwelling units in accordance with Section 1107 shall comply with Section 3409.6.
4. ~~Alterations limited to one individually owned dwelling unit or sleeping unit shall comply with Section 3409.6.~~

(Portions of the proposal not shown remain unchanged)

Commenter's Reason: HUD continues to believe that it is in the public interest to ensure that buildings with 4 or more dwelling units that are covered by the Fair Housing Act's design and construction requirements (that is, were built for first occupancy after March 13, 1991) but were not built in compliance with those requirements, are in fact brought into compliance. Therefore, HUD originally proposed that Chapter 34 of the IBC and corresponding provisions in the IEBC be modified to require buildings with four or more dwelling units that are being altered to be altered in a manner that brings the entire building into compliance. However, given the concerns raised by the MOE Committee, as well as a similar concern raised by the IEBC Committee; we are proposing changes to G214 to limit its scope to only the portions of the building that are being altered. While this change may result in HUD's not being able to recognize Chapter 34 of the IBC and corresponding provisions in the IEBC as being consistent with the design and construction requirements of the Fair Housing Act, we believe it will at least begin to incorporate Type B dwelling units and their related requirements into buildings that should have been built in compliance with the Fair Housing Act in the first place. It is our intention that the proposal apply only to buildings that were not built in compliance with the requirements of the Fair Housing Act and should have been built in compliance, therefore, this proposal would not apply to buildings built in compliance with those editions of the IBC that HUD has previously recognized as a safe harbor for compliance (i.e., the 2000 IBC as amended by the 2001 Supplement, the 2003 IBC and the 2006 IBC). If the code requires such buildings to come into compliance with the current edition of the code when altered, including accessibility requirements that may have changed from one edition to the next, we believe that is a standard code practice and that it should not insurmountable with respect to accessibility any more than it is with respect to all other code matters.

Final Action: AS AM AMPC____ D

G214-07/08, Part II

3409.1 (IEBC [B] 308.1), 3409.4 (IEBC [B] 308.4), 3409.4.1 (IEBC [B] 308.4.1), 3409.4.2 (IEBC [B] 308.4.2), 3409.5 (IEBC [B] 308.5), 3409.6 (IEBC [B] 308.6), 3409.7 (IEBC [B] 308.7) (New), 3409.8 (IEBC [B] 308.8), 3409.8.7 (IEBC [B] 308.8.7); IEBC 605.1, 605.1.8, 605.1.9 (New), 706.3, 912.8, 1005.1, 1005.2 (New)

THIS CODE CHANGE WILL BE HEARD ON THE IBC MEANS OF EGRESS PORTION OF THE HEARING ORDER.

Proposed Change as Submitted:

Proponent: Cheryl Kent, U.S. Department of Housing and Urban Development (HUD)

PART II – IEBC

1. Revise as follows:

605.1 General. A building, facility or element that is altered shall comply with the applicable provisions in Sections 605.1.1 through ~~605.1.12~~ 605.1.13, Chapter 11 of the *International Building Code* and ICC A117.1 unless it is technically infeasible. Where compliance with this section is technically infeasible, the alteration shall provide access to the maximum extent that is technically feasible.

A building, facility or element that is constructed or altered to be accessible shall be maintained accessible during occupancy.

Exceptions:

1. The altered element or space is not required to be on an accessible route unless required by Sections 605.1.9 or 605.2.
2. Accessible means of egress required by Chapter 10 of the *International Building Code* are not required to be provided in existing buildings and facilities.
3. ~~Type B dwelling or sleeping units required by Section 1107 of the *International Building Code* are not required to be provided in existing buildings and facilities.~~
4. ~~4.~~ 3. The alteration to Type A individually owned dwelling units within a Group R-2 occupancy shall meet the provisions for Type B dwelling units and shall comply with the applicable provisions in Chapter 11 of the *International Building Code* and ICC A117.1.

605.1.8 (Supp) Accessible and Type A dwelling or sleeping units. Where Group I-1, I-2, I-3, R-1, R-2, or R-4 dwelling or sleeping units are being altered, the requirements of Section 1107 of the *International Building Code* for Accessible or Type A units and Chapter 9 of the *International Building Code* for visible alarms apply only to the quantity of the spaces being altered.

2. Add new text as follows:

605.1.9 Alterations in Group I and R, and in structures, facilities, or elements serving Groups I or R. Where Group I-1, I-2 and R occupancies are altered the entire structure shall comply with the applicable provisions of Section 1107. Additionally, where structures, facilities, or elements serving Groups I-1, I-2 and R occupancies are altered they shall comply with Section 1107 of the *International Building Code.*

Exceptions:

1. Structures built for first occupancy before March 13, 1991 are not required to provide Type B units.
2. Type B units are not required to be provided where Type B dwelling units and sleeping units were not required at the time of first occupancy in structures designed and constructed after March 13, 1991.
3. Structures that are not required to provide Type B dwelling units and structures not serving Type B dwelling units in accordance with Section 1107 of the *International Building Code* shall comply with Section 605.1.8.
4. Alterations limited to one individually owned dwelling unit or sleeping unit shall comply with Section 308.6.

(Renumber subsequent sections)

3. Revise as follows:

605.2 Alterations affecting an area containing a primary function. Where an alteration affects the accessibility to a, or contains an area of, primary function, the route to the primary function area shall be accessible. The accessible route to the primary function area shall include toilet facilities or drinking fountains serving the area of primary function.

Exceptions:

1. The costs of providing the accessible route are not required to exceed 20 percent of the costs of the alterations affecting the area of primary function.
2. This provision does not apply to alterations limited solely to windows, hardware, operating controls, electrical outlets and signs.
3. This provision does not apply to alterations limited solely to mechanical systems, electrical systems, installation or alteration of fire protection systems and abatement of hazardous materials.
4. This provision does not apply to alterations undertaken for the primary purpose of increasing the accessibility of an existing building, facility or element.

706.3 (Supp) Accessible and Type A dwelling units and sleeping units. Where Group I-1, I-2, I-3, R-1, R-2, or R-4 dwelling units or sleeping units are being added, the requirements of Section 1107 of the *International Building Code* for accessible units or Type A units and Chapter 9 of the *International Building Code* for visible alarms apply only to the quantity of spaces being added.

912.8 (Supp) Accessibility. Existing buildings that undergo a change of group or occupancy classification shall comply with this section.

Exception: Type B dwelling or sleeping units required by Section 1107 of the *International Building Code* are not required to be provided in existing buildings and facilities undergoing a change or occupancy.

912.8.1 (Supp) Partial change in occupancy. Where a portion of the building is changed to a new occupancy classification, any alterations shall comply with Sections 605 and 706 as applicable.

912.8.2 (Supp) Complete change of occupancy. Where an entire building undergoes a change of occupancy, it shall comply with Section 912.8.1 and shall have all of the following accessible features:

1. At least one accessible building entrance.
2. At least one accessible route from an accessible building entrance to primary function areas.
3. Signage complying with Section 1110 of the *International Building Code*.
4. Accessible parking, where parking is provided.
5. At least one accessible passenger loading zone, where loading zones are provided.
6. At least one accessible route connecting accessible parking and accessible passenger loading zones to an accessible entrance.

Where it is technically infeasible to comply with the new construction standards for any of these requirements for a change of group or occupancy, the above items shall conform to the requirements to the maximum extent technically feasible.

~~**Exception:** Type B dwelling or sleeping units required by Section 1107 of the *International Building Code* are not required to be provided in existing buildings and facilities.~~

1005.1 Minimum requirements. Accessibility provisions for new construction shall apply to additions. An addition that affects the accessibility to, or contains an area of, primary function shall comply with the requirements of Section 605.

1005.2 Type B dwelling or sleeping units. Where Group I-1, I-2 or R dwelling or sleeping units are being added, the requirements of Section 1107 of the *International Building Code* for Type B dwelling units or sleeping units and Section 907 of the *International Building Code* for visible alarms apply only to the quantity of spaces being added.

Reason: Change to Section 3409.1 Scope: The purpose of this code change is to clarify misleading and potentially inaccurate scoping requirements in the IBC and IEBC.

The exception in the main scoping paragraph of Section 3409 (IEBC 308.1) is too broad and is, therefore, misleading because it deals with the entire section and makes it appear that there are NO requirements for Type B dwelling units and sleeping units intended to be occupied as a residence, which is not true. Scoping requirements for Type B dwelling units and sleeping units intended to be occupied as a residence in the IBC are intended to reflect the federal Fair Housing Act's accessible design and construction requirements, which apply, without question, to additions to buildings having 4 or more units. There is also ambiguity in the code with respect to how the term "existing structure" is defined. Therefore, requirements for Type B dwelling units and sleeping units intended to be occupied as a residence need to be addressed under each subsection of Section 3409 (IEBC 308).

New Section 3409.7 (renumber accordingly) and New Section 3409.8.7: The purpose of these changes is to ensure that buildings covered by the Fair Housing Act's accessible design and construction requirements and which were not built in compliance, and which also, therefore, do not meet current code requirements for accessibility, are brought up to code.

Many residential structures and facilities serving residential uses that were built after March 13, 1991 and before IBC 2003 (the first building code safe harbor without a supplement) were not built in compliance with the design and construction requirements of the federal Fair Housing Act. Developers are beginning to renovate these facilities. They may not realize that the facilities do not comply with the Fair Housing Act. Therefore, those buildings constructed during the 12 year period prior to the 2003 IBC (1991 through 2003) that are subject to the Fair Housing Act's design and construction requirements must be brought into compliance during any alteration.

New Exception 5 at Section 3409.8 Section 1107.4 which is referenced by proposed new Section 3409.7 requires an accessible route to serve dwelling units and sleeping units. Therefore, an additional path of travel requirement which requires an accessible route serving altered dwelling units and sleeping units would be redundant. Adding a new Exception 5 to exempt Type B dwelling units and sleeping units addresses this concern.

New Exception at 3409.9.7 The purpose of these changes is to ensure that buildings covered by the Fair Housing Act's accessible design and construction requirements and which were not built in compliance, and which also, therefore, do not meet current code requirements for accessibility, are brought up to code.

Many residential structures and facilities serving residential uses that were built after March 13, 1991 and before IBC 2003 (the first building code safe harbor without a supplement) were not built in compliance with the design and construction requirements of the federal Fair Housing Act. Developers are beginning to renovate these facilities. They may not realize that the facilities do not comply with the Fair Housing Act. Therefore, those buildings constructed during the 12 year period prior to the 2003 IBC (1991 through 2003) that are subject to the Fair Housing Act's design and construction requirements must be brought into compliance during any alteration.

Cost Impact: Change to Section 3409.1 - No cost impact involved since this change will correct inaccurate scoping requirements in IBC 3409.1 (IEBC 308.1).

Changes to Sections 3409.7 (new) and 3409.8.7 will not increase the cost of construction as they are intended to ensure that buildings covered by the Fair Housing Act's design and construction requirements reflect those requirements.

PART II – IEBC
Committee Action: **Disapproved**

Committee Reason: The trigger requiring compliance with accessibility provision is too low and unreasonable.

Assembly Action: **None**

Individual Consideration Agenda

This item is on the agenda for individual consideration because a public comment was submitted.

Public Comment:

Cheryl Kent, U.S. Department of Housing and Urban Development (HUD), requests Approval as Modified by this public comment for Part II.

Modify proposal as follows:

605.1.9 Alterations in Group I and R, and in structures, facilities, or elements serving Groups I or R. Where four or more dwelling units or sleeping units intended to be occupied as a residence in Group I-1, I-2 and R occupancies are altered the ~~entire structure~~ building, facility or element that is altered shall comply with the applicable provisions of Section 1107. Additionally, where structures, facilities, or elements serving Groups I-1, I-2 and R occupancies are altered ~~they~~ the altered structures, facilities, or elements shall comply with Section 1107 of the *International Building Code*.

Exceptions:

1. Structures built for first occupancy before March 13, 1991 are not required to provide Type B units.
2. Type B units are not required to be provided where Type B dwelling units and sleeping units were not required at the time of first occupancy in structures designed and constructed after March 13, 1991.
3. Structures that are not required to provide Type B dwelling units and structures not serving Type B dwelling units in accordance with Section 1107 of the *International Building Code* shall comply with Section 605.1.8.
4. ~~Alterations limited to one individually owned dwelling unit or sleeping unit shall comply with Section 308.6.~~

(Portions of the proposal not shown remain unchanged)

Commenter's Reason: HUD continues to believe that it is in the public interest to ensure that buildings with 4 or more dwelling units that are covered by the Fair Housing Act's design and construction requirements (that is, were built for first occupancy after March 13, 1991) but were not built in compliance with those requirements, are in fact brought into compliance. Therefore, HUD originally proposed that Chapter 34 of the IBC and corresponding provisions in the IEBC be modified to require buildings with four or more dwelling units that are being altered to be altered in a manner that brings the entire building into compliance. However, given the concerns raised by the MOE Committee, as well as a similar concern raised by the IEBC Committee; we are proposing changes to G214 to limit its scope to only the portions of the building that are being altered. While this change may result in HUD's not being able to recognize Chapter 34 of the IBC and corresponding provisions in the IEBC as being consistent with the design and construction requirements of the Fair Housing Act, we believe it will at least begin to incorporate Type B dwelling units and their related requirements into buildings that should have been built in compliance with the Fair Housing Act in the first place. It is our intention that the proposal apply only to buildings that were not built in compliance with the requirements of the Fair Housing Act and should have been built in compliance, therefore, this proposal would not apply to buildings built in compliance with those editions of the IBC that HUD has previously recognized as a safe harbor for compliance (i.e., the 2000 IBC as amended by the 2001 Supplement, the 2003 IBC and the 2006 IBC). If the code requires such buildings to come into compliance with the current edition of the code when altered, including accessibility requirements that may have changed from one edition to the next, we believe that is a standard code practice and that it should not insurmountable with respect to accessibility any more than it is with respect to all other code matters.

Final Action: AS AM AMPC____ D

facilities in accordance with NFPA 70. *Dwelling units* shall be served by a three-wire, 120/240 volt, single-phase electrical service having a rating of not less than 60 amperes.

604.3 Electrical system hazards. Where it is found that the electrical system in a structure constitutes a hazard to the *occupants* or the structure by reason of inadequate service, improper fusing, insufficient receptacle and lighting outlets, improper wiring or installation, *deterioration* or damage, or for similar reasons, the *code official* shall require the defects to be corrected to eliminate the hazard.

604.3.1 Abatement of electrical hazards associated with water exposure. The provisions of this section shall govern the repair and replacement of electrical systems and equipment that have been exposed to water.

604.3.1.1 Electrical equipment. Electrical distribution equipment, motor circuits, power equipment, transformers, wire, cable, flexible cords, wiring devices, ground fault circuit interrupters, surge protectors, molded case circuit breakers, low-voltage fuses, luminaires, ballasts, motors and electronic control, signaling and communication equipment that have been exposed to water shall be replaced in accordance with the provisions of the *International Building Code*.

Exception: The following equipment shall be allowed to be repaired where an inspection report from the equipment manufacturer or *approved* manufacturer's representative indicates that the equipment has not sustained damage that requires replacement:

1. Enclosed switches, rated 600 volts or less;
2. Busway, rated 600 volts or less;
3. Panelboards, rated 600 volts or less;
4. Switchboards, rated 600 volts or less;
5. Fire pump controllers, rated 600 volts or less;
6. Manual and magnetic motor controllers;
7. Motor control centers;
8. Alternating current high-voltage circuit breakers;
9. Low-voltage power circuit breakers;
10. Protective relays, meters and current transformers;
11. Low- and medium-voltage switchgear;
12. Liquid-filled transformers;
13. Cast-resin transformers;
14. Wire or cable that is suitable for wet locations and whose ends have not been exposed to water;
15. Wire or cable, not containing fillers, that is suitable for wet locations and whose ends have not been exposed to water;
16. Luminaires that are listed as submersible;
17. Motors;
18. Electronic control, signaling and communication equipment.

604.3.2 Abatement of electrical hazards associated with fire exposure. The provisions of this section shall govern the repair and replacement of electrical systems and equipment that have been exposed to fire.

604.3.2.1 Electrical equipment. Electrical switches, receptacles and fixtures, including furnace, water heating, security system and power distribution circuits, that have been exposed to fire, shall be replaced in accordance with the provisions of the *International Building Code*.

Exception: Electrical switches, receptacles and fixtures that shall be allowed to be repaired where an inspection report from the equipment manufacturer or *approved* manufacturer's representative indicates that the equipment has not sustained damage that requires replacement.

SECTION 605
ELECTRICAL EQUIPMENT

605.1 Installation. All electrical equipment, wiring and appliances shall be properly installed and maintained in a safe and *approved* manner.

605.2 Receptacles. Every *habitable space* in a dwelling shall contain at least two separate and remote receptacle outlets. Every laundry area shall contain at least one grounded-type receptacle or a receptacle with a ground fault circuit interrupter. Every *bathroom* shall contain at least one receptacle. Any new *bathroom* receptacle outlet shall have ground fault circuit interrupter protection.

605.3 Luminaires. Every public hall, interior stairway, *toilet room*, kitchen, *bathroom*, laundry room, boiler room and furnace room shall contain at least one electric luminaire.

SECTION 606
ELEVATORS, ESCALATORS AND DUMBWAITERS

606.1 General. Elevators, dumbwaiters and escalators shall be maintained in compliance with ASME A17.1. The most current certificate of inspection shall be on display at all times within the elevator or attached to the escalator or dumbwaiter, be available for public inspection in the office of the building *operator* or be posted in a publicly conspicuous location *approved* by the *code official*. The inspection and tests shall be performed at not less than the periodic intervals listed in ASME A17.1, Appendix N, except where otherwise specified by the authority having jurisdiction.

606.2 Elevators. In buildings equipped with passenger elevators, at least one elevator shall be maintained in operation at all times when the building is occupied.

Exception: Buildings equipped with only one elevator shall be permitted to have the elevator temporarily out of service for testing or servicing.

Hodge, Vernon

From: Underwood, Lynn [lynn.underwood@norfolk.gov]
Sent: Monday, April 06, 2009 11:32 AM
To: Hodge, Vernon; Farrell, Sean; Roach, Harold L.
Cc: Robertson, Roger; McInnis, Ralston
Subject: PM Code provisions

Vernon, Sean and Harold,

Section 604.3.1 IPMC 2009 edition is a code change that I wrote on behalf of the HAEB Code Committee. It refers to an updated NEMA standard for water-damaged electrical equipment and wiring. It is in the PM code with NEMA's permission and testimony. UL agreed with the change and testified on our behalf as well.

At last Work Group meeting Roger Robertson suggested that it may not be enforceable by PM Official since it was more of a repair than a poor property maintenance condition and that permits would be required to make the repair. I believe that Roger has a point. His suggestion (and one that makes sense to me) is to move this into the USBC in the following manner:

Amend Part I, Section 103 by adding a new subsection 103.5.1 then inserting this language. Then in Section 112, add a new subsection 112.4.1 and create a link to Section 103.5.1.

What do you all think? Would this still give the PM Inspector the tools to enforce the safety aspects of water-damaged electrical equipment while requiring the repairs to have permits and thus inspections?

Thanks all.

Lynn Underwood

Lynn Underwood, C.B.O.
(757) 664-6511 office
(757) 641-7275 cell

Hodge, Vernon

From: Farrell, Sean [SFarrell@pwcgov.org]
Sent: Wednesday, April 08, 2009 9:43 AM
To: Underwood, Lynn; Hodge, Vernon; Roach, Harold L.
Cc: Robertson, Roger; McInnis, Ralston
Subject: RE: PM Code provisions

Lynn, et al,

IPMC Section 604.3 Electrical System Hazards addresses situations where the electrical system poses a threat to the occupants due to insufficient outlets, improper design or installation, deterioration or damage. In my opinion this new section deals with exposure to water and fire where the code official does not determine whether the exposure has caused damage but assumes that the exposure has rendered the equipment/materials potentially faulty and dangerous and therefore mandates replacement. The exposed equipment may not be damaged. Replacement typically will require a permit, but not necessarily in every case. The exception to replacement is a determination made by a representative, either employed or contractual, of the manufacturer that the exposed equipment is not faulty or will still function as designed and tested.

I also agree with Roger's assessment and the wording/language of the proposed code section is a bit out of place for the Maintenance Code. Therefore, I see the need for a connection and handoff.

I agree with the recommended insertions into the VCC. But I think there needs to be a link, to and from, the VMC. If we add the proposed section 604.3.1 but modify it to only say "Electrical equipment exposed to water and/or fire is deemed to be a hazard and shall be replaced in accordance with the IBC".

That should take care of the handoff. It does not affect those situations where the IBC or reference standards need to be applied and permit the re-usage of tested equipment. It would further allow for **citation** and abatement from the maintenance code in those situations where the exposure is minimal and a permit is not needed to replace under the ordinary repair provisions of 108.2.10.3.

Thanks for the opportunity to provide input.

Sean

From: Underwood, Lynn [mailto:lynn.underwood@norfolk.gov]
Sent: Monday, April 06, 2009 11:32 AM
To: Hodge, Vernon; Farrell, Sean; Roach, Harold L.
Cc: Robertson, Roger; McInnis, Ralston
Subject: PM Code provisions

Vernon, Sean and Harold,

Section 604.3.1 IPMC 2009 edition is a code change that I wrote on behalf of the HAEB Code Committee. It refers to an updated NEMA standard for water-damaged electrical equipment and wiring. It is in the PM code with NEMA's permission and testimony. UL agreed with the change and testified on our behalf as well.

At last Work Group meeting Roger Robertson suggested that it may not be enforceable by PM Official since it was more of a repair than a poor property maintenance condition and that permits would be required to make the repair. I believe that Roger has a point. His suggestion (and one that makes sense to me) is to move this into the USBC in the following manner:

Amend Part I, Section 103 by adding a new subsection 103.5.1 then inserting this language. Then in Section 112, add a new subsection 112.4.1 and create a link to Section 103.5.1.

What do you all think? Would this still give the PM Inspector the tools to enforce the safety aspects of water-damaged electrical equipment while requiring the repairs to have permits and thus inspections?

Thanks all.

Lynn Underwood

Lynn Underwood, C.B.O.
(757) 664-6511 office
(757) 641-7275 cell

CHAPTER 1

SCOPE AND ADMINISTRATION

PART 1—SCOPE AND APPLICATION

SECTION 101 (IFGC) GENERAL

101.1 Title. These regulations shall be known as the *Fuel Gas Code* of [NAME OF JURISDICTION], hereinafter referred to as "this code."

101.2 Scope. This code shall apply to the installation of fuel-gas *piping* systems, fuel gas appliances, gaseous hydrogen systems and related accessories in accordance with Sections 101.2.1 through 101.2.5.

Exception: Detached one- and two-family dwellings and multiple single-family dwellings (townhouses) not more than three stories high with separate means of egress and their accessory structures shall comply with the *International Residential Code*.

101.2.1 Gaseous hydrogen systems. Gaseous hydrogen systems shall be regulated by Chapter 7.

101.2.2 Piping systems. These regulations cover *piping* systems for natural gas with an operating pressure of 125 pounds per square inch gauge (psig) (862 kPa gauge) or less, and for LP-gas with an operating pressure of 20 psig (140 kPa gauge) or less, except as provided in Section 402.6. Coverage shall extend from the *point of delivery* to the outlet of the *appliance* shutoff valves. *Piping* system requirements shall include design, materials, components, fabrication, assembly, installation, testing, inspection, operation and maintenance.

101.2.3 Gas appliances. Requirements for gas appliances and related accessories shall include installation, combustion and ventilation air and venting and connections to *piping* systems.

101.2.4 Systems, appliances and equipment outside the scope. This code shall not apply to the following:

1. Portable LP-gas appliances and *equipment* of all types that is not connected to a fixed fuel *piping* system.
2. Installation of farm appliances and *equipment* such as brooders, dehydrators, dryers and irrigation *equipment*.
3. Raw material (feedstock) applications except for *piping* to special atmosphere generators.
4. Oxygen-fuel gas cutting and welding systems.
5. Industrial gas applications using gases such as acetylene and acetylenic compounds, hydrogen, ammonia, carbon monoxide, oxygen and nitrogen.
6. Petroleum refineries, pipeline compressor or pumping stations, loading terminals, compounding plants, refinery tank farms and natural gas processing plants.
7. Integrated chemical plants or portions of such plants where flammable or combustible liquids or gases are produced by, or used in, chemical reactions.
8. LP-gas installations at utility gas plants.
9. Liquefied natural gas (LNG) installations.
10. Fuel gas *piping* in power and atomic energy plants.
11. Proprietary items of *equipment*, apparatus or instruments such as gas-generating sets, compressors and calorimeters.
12. LP-gas *equipment* for vaporization, gas mixing and gas manufacturing.
13. Temporary LP-gas *piping* for buildings under construction or renovation that is not to become part of the permanent *piping* system.
14. Installation of LP-gas systems for railroad switch heating.
15. Installation of hydrogen gas, LP-gas and compressed natural gas (CNG) systems on vehicles.
16. Except as provided in Section 401.1.1, gas *piping*, meters, gas pressure regulators and other appurtenances used by the serving gas supplier in the distribution of gas, other than undiluted LP-gas.
17. Building design and construction, except as specified herein.
18. *Piping* systems for mixtures of gas and air within the flammable range with an operating pressure greater than 10 psig (69 kPa gauge).
19. Portable fuel cell appliances that are neither connected to a fixed *piping* system nor interconnected to a power grid.

101.2.5 Other fuels. The requirements for the design, installation, maintenance, *alteration* and inspection of mechanical systems operating with fuels other than fuel gas shall be regulated by the *International Mechanical Code*.

101.3 Appendices. Provisions in the appendices shall not apply unless specifically adopted.

101.4 Intent. The purpose of this code is to provide minimum standards to safeguard life or limb, health, property and public welfare by regulating and controlling the design, construction, installation, quality of materials, location, operation and maintenance or use of fuel gas systems.

101.5 Severability. If a section, subsection, sentence, clause or phrase of this code is, for any reason, held to be unconstitutional, such decision shall not affect the validity of the remaining portions of this code.

Exception: Where the make and model of the clothes dryer to be installed is known and the manufacturer's installation instructions for such dryer are provided to the code official, the maximum length of the exhaust duct, including any transition duct, shall be permitted to be in accordance with the dryer manufacturer's installation instructions.

5. Change Section 507.2.2 of the *International Mechanical Code* to read:

507.2.2. Type II hoods. Type II hoods shall be installed where cooking or dishwashing appliances produce heat, steam, or products of combustion and do not produce grease or smoke, such as steamers, kettles, pasta cookers and dishwashing machines.

Exceptions:

1. Under-counter-type commercial dishwashing machines.
2. A Type II hood is not required for dishwashers and potwashers that are provided with heat and water vapor exhaust systems that are supplied by the appliance manufacturer and are installed in accordance with the manufacturer's instructions.
3. A single light-duty electric convection, bread, retherm, steamer or microwave oven designed for countertop installation. The additional heat and moisture loads generated by such appliances shall be accounted for in the design of the HVAC system.
4. A Type II hood is not required for the following electrically heated appliances: toasters, steam tables, popcorn poppers, hot dog cookers, coffee makers, rice cookers, egg cookers, holding/warming ovens. The additional heat and moisture loads generated by such appliances shall be accounted for in the design of the HVAC system.

6. Change Section 701.1 of the International Mechanical Code to read as follows and delete the remainder of Chapter 7:

701.1 Scope. Solid-fuel-burning appliances shall be provided with combustion air in accordance with the appliance manufacturer's installation instructions. Oil-fired appliances shall be provided with combustion air in accordance with NFPA 31. The methods of providing combustion air in this chapter do not apply to fireplaces, fireplace stoves and direct-vent appliances. The requirements for combustion and dilution air for gas-fired appliances shall be in accordance with the International Fuel Gas Code.

7. Add Section 801.1.1 to the *International Mechanical Code* to read:

801.1.1 Equipment changes. Upon the replacement or new installation of any fuel-burning appliances or equipment in existing buildings, an inspection or inspections shall be conducted to ensure that the connected vent or chimney systems comply with the following:

1. Vent of chimney systems are sized in accordance with this code.
2. Vent or chimney systems are clean, free of any obstructions or blockages, defects or deterioration and are in operable condition.

Where not inspected by the local building department, persons performing such changes or installations shall certify to the building official that the requirements of Items 1 and 2 of this section are met.

Add Section 2804.1 to the IBC to read:

2804.1 Changes to the *International Fuel Gas Code*. The following changes shall be made to the *International Fuel Gas Code*:

1. Change Section 301.1 of the *International Fuel Gas Code* to read:

301.1 Scope. This code shall apply to the installation of fuel gas piping systems, fuel gas utilization equipment, and related accessories as follows:

1. Coverage of piping systems shall extend from the point of delivery to the connections with gas utilization equipment. (See "point of delivery.")

2. Systems with an operating pressure of 125 psig (862 kPa gauge) or less.

   Piping systems for gas-air mixtures within the flammable range with an operating pressure of 10 psig (69 kPa gauge) or less.

   LP-Gas piping systems with an operating pressure of 20 psig (140 kPa gauge) or less.

3. Piping systems requirements shall include design, materials, components, fabrication, assembly, installation, testing and inspection.

4. Requirements for gas utilization equipment and related accessories shall include installation, combustion and ventilation air and venting.

This code shall not apply to the following:

1. Portable LP-Gas equipment of all types that are not connected to a fixed fuel piping system.

2. Installation of farm equipment such as brooders, dehydrators, dryers, and irrigation equipment.

3. Raw material (feedstock) applications except for piping to special atmosphere generators.

4. Oxygen-fuel gas cutting and welding systems.

5. Industrial gas applications using gases such as acetylene and acetylenic compounds, hydrogen, ammonia, carbon monoxide, oxygen, and nitrogen.

6. Petroleum refineries, pipeline compressor or pumping stations, loading terminals, compounding plants, refinery tank farms, and natural gas processing plants.

7. Integrated chemical plants or portions of such plants where flammable or combustible liquids or gases are produced by chemical reactions or used in chemical reactions.

8. LP-Gas installations at utility gas plants.

9. Liquefied natural gas (LNG) installations.

10. Fuel gas piping in power and atomic energy plants.

11. Proprietary items of equipment, apparatus, or instruments such as gas generating sets, compressors, and calorimeters.

12. LP-Gas equipment for vaporization, gas mixing, and gas manufacturing.

13. Temporary LP-Gas piping for buildings under construction or renovation that is not to become part of the permanent piping system.

14. Installation of LP-Gas systems for railroad switch heating.

15. Installation of LP-Gas and compressed natural gas (CNG) systems on vehicles.

VIRGINIA DEPARTMENT OF HOUSING AND COMMUNITY DEVELOPMENT
DIVISION OF BUILDING AND FIRE REGULATION
Code Change Form for the 2009 Code Change Cycle

Code Change Number:_____

Proponent Information (Check one): ☒Individual ☒Government Entity ☐Company

Name: Ron Clements
Representing: Chesterfield County Building Inspections

Mailing Address: 9800 Government Center Parkway, Chesterfield County VA, 23832
Email Address: clementsro@chesterfield.gov Telephone Number: (804) 751-6143

Proposal Information

Code(s) and Section(s): VA Construction code section 3109.3

Proposed Change (including all relevant section numbers, if multiple sections):
Delete the reference to ANSI/NSPI-1 and ANSI/NSPI-2 entirely and use the 2009 IBC section 3109.3 without ammendment.

Delete: "shall be designed and constructed in comformance with ANSI/NSPI-1 or ANSI/NSPI-2, as applicable"

Supporting Statement (including intent, need, and impact of the proposal):
These two standards were submitted to the ICC General committee for reference by the IBC but the code change was denied because the standards have many problems that made them unusable as reference standards. As a plan review engineer that has attempted to use the documents to review commercial pool plans, and a past member of the ICC General committee that reviewed these documents, I can attest the the fact that they are very poor standards. The majority of the substance of these standards are addressing aspects of pools and spas outside of the scope of the building code and it leaves the code user questioning what is enforceable or intended to be enforced. Some examples from the standards are:

5.2.1 Control of sand for beach pool environments; 5.3 Structural design in accordance with accepted engineering practices but no reference to an engineering standard; 5.4 freeze protection requirements for pool shells, filters, pumps, and "other" components not listed; 5.6 regulating colors and finishes of the pool; 6.8 maximum user loads; section 7 regulating the walking area (deck) around the pool; 7.1.16 hose bibs and cross connection that should be regulated by the plumbing code; 7.2 Deck equipment regulations for starting blocks and diving equipment; 8.1.1.1 regulates water clarity; 8.1.2 regulating circulation, 8.2 regulating water velocity; 8.4 regulating guage requirements on pool equipment; secion 9 regulation filtration; section 10 regulating pump sizing; section 12 regulation surface skimming; section 19 regulating dressing rooms and facilities; section 19.6 regulating required bathroom facilities that appear to overide the Plumbing code; Section 20 regulating spectator areas; section 21 regulation food comsumption within the pool; section 22 regulation management of the pool.

I could go on but you get the point. If there is a specific aspect of pool design that is not addressed by the IBC the specific aspect should be placed into the IBC without reference to the standard, or the specific section should be referenced.

The 2009 IBC regulates the fence or barrier required around the pool and required entrapment avoidance is regulated through a reference to the ANSI/APSP-7 standard for entrapment avoidance. Note that ANSI NSPI-1 also has a section on entrapment avoidance that is no longer valid based on the 2009 reference to ANSI/APSP-7.

Submittal Information

Date Submitted: _____

The proposal may be submitted by email as an attachment, by fax, by mail, or by hand delivery.
Please submit the proposal to:

DHCD DBFR TASO (Technical Assistance and Services Office)
The Jackson Center
501 N. 2nd Street
Richmond, VA 23219-1321

Email Address: taso@dhcd.virginia.gov
Fax Number: (804) 371-7092
Phone Numbers: (804) 371-7140 or (804) 371-7150

What does the VGB Act mandate?

The Virginia Graeme Baker Pool and Spa Safety Act (VGB Act) was signed into federal law on December 19, 2007, with the support of the Association of Pool & Spa Professionals (APSP). **Please visit www.APSP.org/VGB for the latest information.**

Public pools and spas that are not in compliance by December 19, 2008, may not open for use until compliant.

The VGB Act contains three federally enforced mandates—each effective December 19, 2008:

1. All drain covers (public and residential) manufactured, imported, distributed, or offered into commerce must comply with the new ASME/ANSI A112.19.8 2007 standard.

   Proof of compliance requires testing and certification by a Nationally Recognized Testing Laboratory, except for "Field Fabricated Outlets" defined under Section 2.3.1 of the ASME standard. These specialized suction outlets may qualify for site-specific certification by a Registered Design Professional, as defined in Section 1.5 of the ASME standard.
2. All public pools and spas (new and existing) must be retrofitted with covers that meet the new ASME/ANSI A112.19.8 2007 standard, or qualified Field Fabricated Outlets may be certified by a Registered Design Professional, as stipulated in the ASME standard.
3. All public pools and spas that have a single drain other than an unblockable drain must employ one or more additional options.

This compliance guide does not address every public pool and spa configuration. For more thorough compliance guidance, including how to determine and address maximum system flow rates, follow the ANSI/APSP-7 Suction Entrapment Avoidance Standard.

For additional information, be sure to read the following. You can also consult an APSP member using the member locator at www.APSP.org.

- ANSI/APSP-7 Suction Entrapment Avoidance Standard. This standard meets or exceeds all the requirements of the VGB Act. To order, visit the APSP Store at www.APSP.org.
- ASME/ANSI A112.19.8 2007 standard. To order, go to www.asme.org.
- APSP list of "Frequently Asked Questions" at www.APSP.org/VGB_FAQs.

APSP
Association of
Pool & Spa Professionals®

2111 Eisenhower Avenue • Alexandria VA 22314
703.838.0083, ext. 301 • memberservices@APSP.org
www.APSP.org

© Association of Pool and Spa Professionals (APSP) 2008

Virginia Graeme Baker Pool and Spa Safety Act

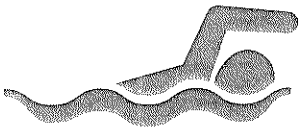

APSP COMPLIANCE GUIDE

For public pool and spa owners and operators, builders, and service professionals

APSP
Association of
Pool & Spa Professionals®

HOW do I know if my public pool and spa complies with the VGB Act?

Public pools and spas built before December 19, 2007, are not compliant unless they were built without submerged suction outlets, or the suction system has since been modified to comply. To help determine compliance, use the following steps:

Determine if your drain covers comply with the VGB Act, Section 1404(c)(1)(A)(i), by answering the following:

❶ Are the cover(s) marked with "VGB 2008," "ASME/ANSI A112.19.8 2007," or the swimmer logo*? Or have qualified Field Fabricated Outlets been certified by a Registered Design Professional? ☐ Yes ☐ No

❷ For single and dual outlet systems, is the flow rating for each cover equal to or greater than the Maximum System GPM? Or for systems with three or more covers per pump—assume one is completely blocked off and then ask—is the combined flow rating of all unblocked covers equal to or greater than the Maximum System GPM? ☐ Yes ☐ No

❸ Is the cover properly secured, according to the manufacturer's instructions, to a manufactured sump or field-built sump design, and is the cover tested and certified by a Nationally Recognized Testing Laboratory (NRTL)? ☐ Yes ☐ No

If the answer to any of these questions is "No," the pool does not comply.

Corrective Action:

- If the cover(s) are not qualified Field Fabricated Outlet(s), go to www.APSP.org/CoversandSVRS for a list of APSP-member manufacturers that offer compliant covers, or visit www.cpsc.gov. Ask the manufacturers if their covers include a flow rating greater than the Maximum System GPM and are certified by an NRTL for use on the existing sump.
- If the cover(s) are qualified Field Fabricated Outlet(s), you must consult a Registered Design Professional for certification. Qualified Field Fabricated Outlets are large enough that the 18 x 23-inch body blocking element will not cause differential pressure that could cause body entrapment, as defined by the procedures of the ASME standard. The Registered Design Professional will be responsible for certifying all requirements of the ASME standard, including but not limited to flow rating, cover strength, and sump design.

Determine if your back-up options comply with the VGB Act, Section 1404(c)(1)(A)(ii), by answering the following:

❶ If the pool has a multiple main-drain system (i.e., more than one suction outlet per pump), is the center-to-center distance between the two covers at least 36 inches? ☐ Yes ☐ No

If "Yes," then no further corrective action is required.

If "No," this is considered a single-drain system for purposes of complying with the VGB Act (see "Corrective Action" below for single-drain systems).

❷ If the pool has a single-suction outlet, is it unblockable? Determine by answering the following:

A. Does the sump exceed 18 x 23 inches?
☐ Yes ☐ No

B. Does the sump have an open-area diagonal that exceeds 29 inches?
☐ Yes ☐ No

If the answers to 2(A) and 2(B) are "Yes," then no further corrective action is required.

If the answer to 2(A) OR 2(B) is "No," this is considered a single-drain system for purposes of complying with the VGB Act (see "Corrective Action" below for single-drain systems).

Corrective Action: To get single-drain systems to comply, you must use one of the following options:

A. Consider drain disablement or reversal of the flow.
B. Install additional properly spaced outlet(s) with compliant cover(s).
C. Install safety vacuum release system(s) (SVRS)*.
D. Install a gravity drainage system.
E. Install a suction-limiting vent system.
F. Install an automatic pump shut-off system*.

*For a list of APSP member companies that manufacture SVRS products or automatic pump shut-off systems, go to www.APSP.org/CoversandSVRS.

Visit www.APSP.org/VGB for the latest information.

Safety and Security Lead to Fun and Fitness

Pools, spas, and hot tubs provide the opportunity for family and friends to come together for many hours of fun, fitness, and socialization, while improving health and wellbeing.

Like many other products you use everyday, there are rules to follow and safety devices to install that ensure a positive experience. For example, seatbelt use in a car provides essential protection for you and your children. You and your family will get the ultimate pleasure from all your pool, spa, or hot tub have to offer by following some basic rules, and being aware of necessary safety equipment.

Remember:

- **Never swim alone**
- **Always be sure there is an adult watching, with NO distractions**
- **Never enter a pool if the drain cover is broken or missing.**

The Virginia Graeme Baker (VGB) Pool & Spa Safety Act

The VGB Act was passed by Congress with the support of the APSP and its members. The Act imposes requirements for all drain covers, and requires retrofitting of all public pools and spas. The Act also encourages each state to adopt entrapment avoidance laws for residential pools and spas and barrier requirements to prevent drowning.

The Standard on Protection

APSP facilitated the creation of the definitive standard on suction entrapment. It was reviewed through a rigorous two year process with a group representing more than 70 organizations, government agencies and companies that are interested in protecting consumers, and was approved by the American National Standards Institute (ANSI).

For further information, visit www.apsp.org.
Also, read the U.S. Consumer Product Safety Commission entrapment guidelines at:
www .cpsc.gov/cpscpub/pubs/363.pdf.

Always rely on a professional for all your pool, spa, and hot tub needs

Safety is a core value of APSP members. To find an APSP member in your area, visit **www.apsp.org.**

APSP *The Association of Pool & Spa Professionals®*

www.apsp.org

APSP **Consumer Safety Series** 52

Make your pool, spa or hot tub safe for your family with these

Entrapment Avoidance Guidelines

NEW Virginia Graeme Baker Pool & Spa Safety Act sets standards for pool/spa drain covers. See important information inside!

APSP
The Association of Pool & Spa Professionals®

Be Water Aware

Avoid Entrapment!

Always Follow These Important Rules

- Never play or swim near drains or suction fittings. If a cover is not compliant, or is loose or broken, your body or hair may be trapped causing permanent injury or drowning.
- Never enter a pool or spa that has a loose, broken, or missing suction fitting or drain cover.
- Immediately notify the pool/spa owner or operator if you find a loose, broken, or missing drain cover. In such a case the pool or spa should be closed and an industry professional should make the necessary repair or replacement.

Be Aware of the 5 Types of Entrapment:

- **Hair**: Hair can become entangled in an improperly covered drain.
- **Limbs**: Arms or legs can get lodged and may not be able to be pulled free from an improperly covered drain, even if the pumps are turned off.
- **Body**: Any part of the body that covers a drain can be held down by the suction.
- **Evisceration**: Sitting on a drain with suction or a broken or missing cover can cause injuries or disembowlment.
- **Mechanical**: Fingers, toes, and items such as jewelry or a bathing suit can become entangled and stuck in a non-compliant drain or cover.

Always be sure your builder and service person are knowledgeable professionals who will build and service your pool to meet the ANSI/APSP -7 standard.

The Association of Pool & Spa Professionals offers its members continuing education and certification to be sure they are up-to-date on safety regulations and devices.

APSP *The Association of Pool & Spa Professionals®*

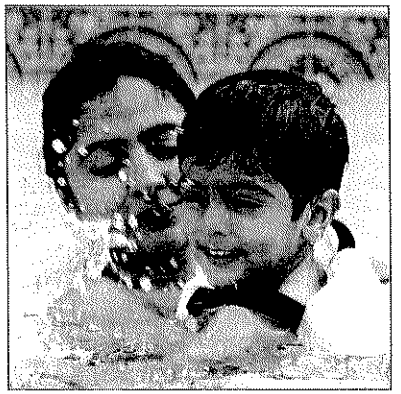

Take These 3 Steps to Keep Your Pool, Spa, or Hot Tub Safe and Free from Entrapment Risk

1. Have your pool or spa inspected by a licensed industry professional.
2. There is no backup for a broken, missing or inadequate cover. Replace any broken, missing or non complaint covers with covers that are marked: **"VGB2008," "ASME/ANSI A112.19.8-2007"** or show the swimmer logo.

(Below: examples of proper drain covers)

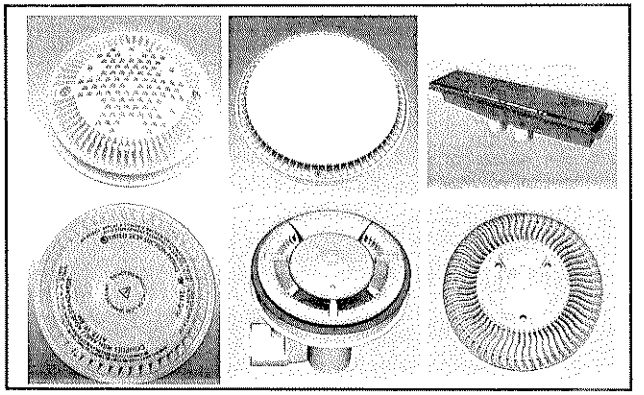

3. Pools or spas with a single main drain require additional protection. Options include
   - eliminating the drain or reversing the flow
   - adding a second, properly spaced outlet
   - installing an SVRS (safety vacuum release system)
   - installing an automatic pump shut-off system
   - installing a suction limiting vent system
   - adding a gravity drainage system

VIRGINIA DEPARTMENT OF HOUSING AND COMMUNITY DEVELOPMENT
DIVISION OF BUILDING AND FIRE REGULATION

Code Change Form for the 2009 Code Change Cycle

Code Change Number:_____

Proponent Information (Check one): ☐ Individual ☐ Government Entity ☒ Company

Name: J. Kenneth Payne, Jr., AIA Representing: VSAIA

Mailing Address: 3200 Norfolk Street, Richmond, Virginia 23230

Email Address: kpayne@moseleyarchitects.com Telephone Number: 804-794-7555

Proposal Information

Code(s) and Section(s): 2009 IBC and 2009 IFC, Section 1008.1.10 – Panic and fire exit hardware

Proposed Change (including all relevant section numbers, if multiple sections):

1008.1.10 Panic and fire exit hardware. Doors serving a Group H occupancy and doors serving rooms or spaces with an occupant load of 50 or more in a Group A or E occupancy shall not be provided with a latch or lock unless it is panic hardware or fire exit hardware.

Exception: A main exit of a Group A occupancy in compliance with Section 1008.1.9.3, Item 2.

Electrical rooms with equipment rated 1,200 amperes or more ~~and over 6 feet (1829 mm) wide~~ that contain overcurrent devices, switching devices or control devices with exit or exit access doors shall be equipped with panic hardware or fire exit hardware. The doors shall swing in the direction of egress travel.

Supporting Statement (including intent, need, and impact of the proposal):

NFPA 70 (NEC-08) Section 110.26(C)(3) does not contain the 6-foot wide requirement when it comes to providing panic hardware and door-opening direction. The 6-foot wide requirement is only required when determining the need for two doors (or single door when certain conditions are met). The proposed change will comport the building code (USBC/IBC) to its referenced code (NFPA 70/NEC) and avoid possible confusion between RDPs, electrical subcontractors, and/or electrical inspectors.

Submittal Information

Date Submitted: April 9, 2009

The proposal may be submitted by email as an attachment, by fax, by mail, or by hand delivery.

Please submit the proposal to:

DHCD DBFR TASO (Technical Assistance and Services Office)
The Jackson Center
501 N. 2nd Street
Richmond, VA 23219-1321

Email Address: taso@dhcd.virginia.gov
Fax Number: (804) 371-7092
Phone Numbers: (804) 371-7140 or (804) 371-7150

VIRGINIA DEPARTMENT OF HOUSING AND COMMUNITY DEVELOPMENT
DIVISION OF BUILDING AND FIRE REGULATION

Code Change Form for the 2009 Code Change Cycle

Code Change Number:_____

Proponent Information (Check one): ☐Individual ☐Government Entity ☒Company

Name: J. Kenneth Payne, Jr., AIA Representing: VSAIA

Mailing Address: 3200 Norfolk Street, Richmond, Virginia 23230

Email Address: kpayne@moseleyarchitects.com Telephone Number: 804-794-7555

Proposal Information

Code(s) and Section(s): 2009 IBC and 2009 IFC, Section 1015 – Exit and Exit Access Doorways

Proposed Change (including all relevant section numbers, if multiple sections):

Add the following new subparagraph:

1015.7 Electrical rooms. Two exit access doorways are required in electrical rooms with equipment rated 1,200 amperes or more and over 6 feet (1829 mm) wide that contain overcurrent devices, switching devices, or control devices. Exit access doorways shall be located at each end of the room, or separated by a horizontal distance equal to one-half the length of the maximum overall diagonal dimension of the room, provided the path of exit access does not cross in front of the equipment. Exit access doorways shall also comply with Section 1008.1.10.

Exception: A single exit access doorway shall be permitted where either of the following conditions is met:

1. Unobstructed Exit. Where the doorway is located to permit a continuous and unobstructed exit access provided the path of exit access travel does not cross in front, behind, or to the side of the equipment.

2. Extra Working Space. Where the depth of the working space is twice that required by NFPA 70, but not less than 6 feet (1829 mm) wide or greater than 8 feet (2438 mm) wide. The doorway shall be located so that the distance from the equipment to the nearest edge of the doorway is not less than the minimum clear distance required by NFPA 70 for equipment operating at that voltage and in that condition, but not less than 6 feet (1829 mm) wide or greater than 8 feet (2438 mm) wide.

Supporting Statement (including intent, need, and impact of the proposal):

In accordance with the 2006 USBC 2701.1, only electrical components, equipment, and systems are governed by NFPA 70 (NEC)...not the actual building/structure construction (doors, hardware, etc.). However, NFPA 70 (NEC-5 and 08) 110.26(C)(2) requires two doorways "at each end of the working space," as well as panic hardware and door-opening direction requirements. In accordance with the USBC, these "construction-related" requirements are not governed by NFPA 70 (NEC), since doors and hardware are not electrical *components*, *equipment*, or *systems*.

The 2009 IBC addresses the hardware and door-opening direction requirements in Section 1008.1.10; however, it appears it does not address the need for two doors (or its exceptions). Therefore, it is possible the two doors will not be designed into the project.

In most of those cases, the Electrical Subcontractor will not install the large equipment unless there is a second door provided and/or Electrical Inspectors will require the same before granting approval. This creates change orders and additional costs associated with those projects. Situations like this could be avoided if the "construction" requirements for the two doors were included in the building code.

Less confusion on the part of the registered design professionals would occur, since the requirements would be located within the building code itself...just as the hardware and door-opening direction requirements are now included. If the requirements for the doorways were added to the building code, it would then comport to the hardware, door-opening direction, and number of doorways required by NFPA 70 (NEC), thus potentially avoiding unnecessary and costly change orders.

The proposed language is generally that found in the NFPA 70 (NEC-05 and 08). It also closely mimics the language found in Section 1015.3.

Submittal Information

Date Submitted: April 9, 2009

The proposal may be submitted by email as an attachment, by fax, by mail, or by hand delivery.

Please submit the proposal to:

DHCD DBFR TASO (Technical Assistance and Services Office)
The Jackson Center
501 N. 2nd Street
Richmond, VA 23219-1321

Email Address: taso@dhcd.virginia.gov
Fax Number: (804) 371-7092
Phone Numbers: (804) 371-7140 or (804) 371-7150

F] WIRELESS PROTECTION SYSTEM. A system or a part of a system that can transmit and receive signals without the aid of wire.

F] ZONE. A defined area within the protected premises. A zone can define an area from which a signal can be received, an area to which a signal can be sent or an area in which a form of control can be executed.

SECTION 903
AUTOMATIC SPRINKLER SYSTEMS

[F] 903.1 General. Automatic sprinkler systems shall comply with this section.

[F] 903.1.1 Alternative protection. Alternative automatic fire-extinguishing systems complying with Section 904 shall be permitted in lieu of automatic sprinkler protection where recognized by the applicable standard and approved by the fire code official.

[F] 903.2 Where required. Approved automatic sprinkler systems in new buildings and structures shall be provided in the locations described in this section.

Exception: Spaces or areas in telecommunications buildings used exclusively for telecommunications equipment, associated electrical power distribution equipment, batteries and standby engines, provided those spaces or areas are equipped throughout with an automatic fire alarm system and are separated from the remainder of the building by fire barriers consisting of not less than 1-hour fire-resistance-rated walls and 2-hour fire-resistance-rated floor/ceiling assemblies.

[F] 903.2.1 Group A. An automatic sprinkler system shall be provided throughout buildings and portions thereof used as Group A occupancies as provided in this section. For Group A-1, A-2, A-3 and A-4 occupancies, the automatic sprinkler system shall be provided throughout the floor area where the Group A-1, A-2, A-3 or A-4 occupancy is located, and in all floors between the Group A occupancy and the level of exit discharge. For Group A-5 occupancies, the automatic sprinkler system shall be provided in the spaces indicated in Section 903.2.1.5.

[F] 903.2.1.1 Group A-1. An automatic sprinkler system shall be provided for Group A-1 occupancies where one of the following conditions exists:

1. The fire area exceeds 12,000 square feet (1115 m^2).
2. The fire area has an occupant load of 300 or more.
3. The fire area is located on a floor other than the level of exit discharge.
4. The fire area contains a multitheater complex.

[F] 903.2.1.2 Group A-2. An automatic sprinkler system shall be provided for Group A-2 occupancies where one of the following conditions exists:

1. The fire area exceeds 5,000 square feet (465 m^2);
2. The fire area has an occupant load of 100 or more; or
3. The fire area is located on a floor other than the level of exit discharge.

[F] 903.2.1.3 Group A-3. An automatic sprinkler system shall be provided for Group A-3 occupancies where one of the following conditions exists:

1. The fire area exceeds 12,000 square feet (1115 m^2).
2. The fire area has an occupant load of 300 or more.
3. The fire area is located on a floor other than the level of exit discharge.

Exception: Areas used exclusively as participant sports areas where the main floor area is located at the same level as the level of exit discharge of the main entrance and exit.

[F] 903.2.1.4 Group A-4. An automatic sprinkler system shall be provided for Group A-4 occupancies where one of the following conditions exists:

1. The fire area exceeds 12,000 square feet (1115 m^2).
2. The fire area has an occupant load of 300 or more.
3. The fire area is located on a floor other than the level of exit discharge.

Exception: Areas used exclusively as participant sports areas where the main floor area is located at the same level as the level of exit discharge of the main entrance and exit.

[F] 903.2.1.5 Group A-5. An automatic sprinkler system shall be provided for Group A-5 occupancies in the following areas: concession stands, retail areas, press boxes and other accessory use areas in excess of 1,000 square feet (93 m^2).

[F] 903.2.2 Group E. An automatic sprinkler system shall be provided for Group E occupancies as follows:

1. Throughout all Group E fire areas greater than 20,000 square feet (1858 m^2) in area.
2. Throughout every portion of educational buildings below the level of exit discharge.

Exception: An automatic sprinkler system is not required in any fire area or area below the level of exit discharge where every classroom throughout the building has at least one exterior exit door at ground level.

[F] 903.2.3 Group F-1. An automatic sprinkler system shall be provided throughout all buildings containing a Group F-1 occupancy where one of the following conditions exists:

1. Where a Group F-1 fire area exceeds 12,000 square feet (1115 m^2);
2. Where a Group F-1 fire area is located more than three stories above grade plane; or
3. Where the combined area of all Group F-1 fire areas on all floors, including any mezzanines, exceeds 24,000 square feet (2230 m^2).

[F] TROUBLE SIGNAL. A signal initiated by the fire alarm system or device indicative of a fault in a monitored circuit or component.

[F] VISIBLE ALARM NOTIFICATION APPLIANCE. A notification appliance that alerts by the sense of sight.

[F] WET-CHEMICAL EXTINGUISHING SYSTEM. A solution of water and potassium-carbonate-based chemical, potassium-acetate-based chemical or a combination thereof, forming an extinguishing agent.

[F] WIRELESS PROTECTION SYSTEM. A system or a part of a system that can transmit and receive signals without the aid of wire.

[F] ZONE. A defined area within the protected premises. A zone can define an area from which a signal can be received, an area to which a signal can be sent or an area in which a form of control can be executed.

[F] ZONE, NOTIFICATION. An area within a building or facility covered by notification appliances which are activated simultaneously.

SECTION 903
AUTOMATIC SPRINKLER SYSTEMS

[F] 903.1 General. *Automatic sprinkler systems* shall comply with this section.

[F] 903.1.1 Alternative protection. Alternative automatic fire-extinguishing systems complying with Section 904 shall be permitted in lieu of automatic sprinkler protection where recognized by the applicable standard and *approved* by the fire code official.

[F] 903.2 Where required. Approved *automatic sprinkler systems* in new buildings and structures shall be provided in the locations described in Sections 903.2.1 through 903.2.12.

Exception: Spaces or areas in telecommunications buildings used exclusively for telecommunications equipment, associated electrical power distribution equipment, batteries and standby engines, provided those spaces or areas are equipped throughout with an automatic smoke detection system in accordance with Section 907.2 and are separated from the remainder of the building by not less than 1-hour *fire barriers* constructed in accordance with Section 707 or not less than 2-hour *horizontal assemblies* constructed in accordance with Section 712, or both.

[F] 903.2.1 Group A. An *automatic sprinkler system* shall be provided throughout buildings and portions thereof used as Group A occupancies as provided in this section. For Group A-1, A-2, A-3 and A-4 occupancies, the *automatic sprinkler system* shall be provided throughout the floor area where the Group A-1, A-2, A-3 or A-4 occupancy is located, and in all floors from the Group A occupancy to, and including, the nearest *level of exit discharge* serving the Group A occupancy. For Group A-5 occupancies, the *automatic sprinkler system* shall be provided in the spaces indicated in Section 903.2.1.5.

[F] 903.2.1.1 Group A-1. An *automatic sprinkler system* shall be provided for Group A-1 occupancies where one of the following conditions exists:

1. The *fire area* exceeds 12,000 square feet (1115 m^2);
2. The *fire area* has an *occupant load* of 300 or more;
3. The *fire area* is located on a floor other than a *level of exit discharge* serving such occupancies; or
4. The *fire area* contains a multitheater complex.

[F] 903.2.1.2 Group A-2. An *automatic sprinkler system* shall be provided for Group A-2 occupancies where one of the following conditions exists:

1. The *fire area* exceeds 5,000 square feet (464.5 m^2);
2. The *fire area* has an *occupant load* of 100 or more; or
3. The *fire area* is located on a floor other than a *level of exit discharge* serving such occupancies.

[F] 903.2.1.3 Group A-3. An *automatic sprinkler system* shall be provided for Group A-3 occupancies where one of the following conditions exists:

1. The *fire area* exceeds 12,000 square feet (1115 m^2);
2. The *fire area* has an *occupant load* of 300 or more; or
3. The *fire area* is located on a floor other than a *level of exit discharge* serving such occupancies.

[F] 903.2.1.4 Group A-4. An *automatic sprinkler system* shall be provided for Group A-4 occupancies where one of the following conditions exists:

1. The *fire area* exceeds 12,000 square feet (1115 m^2);
2. The *fire area* has an *occupant load* of 300 or more; or
3. The *fire area* is located on a floor other than a *level of exit discharge* serving such occupancies.

[F] 903.2.1.5 Group A-5. An *automatic sprinkler system* shall be provided for Group A-5 occupancies in the following areas: concession stands, retail areas, press boxes and other accessory use areas in excess of 1,000 square feet (93 m^2).

[F] 903.2.2 Group B ambulatory health care facilities. An *automatic sprinkler system* shall be installed throughout all fire areas containing a Group B ambulatory health care facility occupancy when either of the following conditions exists at any time:

1. Four or more care recipients are incapable of self-preservation.
2. One or more care recipients who are incapable of self-preservation are located at other than the *level of exit discharge* serving such an occupancy.

[F] 903.2.3.1 Woodworking operations. An automatic sprinkler system shall be provided throughout all Group F-1 occupancy fire areas that contain woodworking operations in excess of 2,500 square feet (232 m²) in area which generate finely divided combustible waste or use finely divided combustible materials.

[F] 903.2.4 Group H. Automatic sprinkler systems shall be provided in high-hazard occupancies as required in Sections 903.2.4.1 through 903.2.4.3.

[F] 903.2.4.1 General. An automatic sprinkler system shall be installed in Group H occupancies.

[F] 903.2.4.2 Group H-5. An automatic sprinkler system shall be installed throughout buildings containing Group H-5 occupancies. The design of the sprinkler system shall not be less than that required by this code for the occupancy hazard classifications in accordance with Table 903.2.4.2. Where the design area of the sprinkler system consists of a corridor protected by one row of sprinklers, the maximum number of sprinklers required to be calculated is 13.

[F] TABLE 903.2.4.2
GROUP H-5 SPRINKLER DESIGN CRITERIA

LOCATION	OCCUPANCY HAZARD CLASSIFICATION
Fabrication areas	Ordinary Hazard Group 2
Service corridors	Ordinary Hazard Group 2
Storage rooms without dispensing	Ordinary Hazard Group 2
Storage rooms with dispensing	Extra Hazard Group 2
Corridors	Ordinary Hazard Group 2

[F] 903.2.4.3 Pyroxylin plastics. An automatic sprinkler system shall be provided in buildings, or portions thereof, where cellulose nitrate film or pyroxylin plastics are manufactured, stored or handled in quantities exceeding 100 pounds (45 kg).

[F] 903.2.5 Group I. An automatic sprinkler system shall be provided throughout buildings with a Group I fire area.

Exception: An automatic sprinkler system installed in accordance with Section 903.3.1.2 or 903.3.1.3 shall be allowed in Group I-1 facilities.

[F] 903.2.6 Group M. An automatic sprinkler system shall be provided throughout buildings containing a Group M occupancy where one of the following conditions exists:

1. Where a Group M fire area exceeds 12,000 square feet (1115 m²);
2. Where a Group M fire area is located more than three stories above grade plane; or
3. Where the combined area of all Group M fire areas on all floors, including any mezzanines, exceeds 24,000 square feet (2230 m²).

[F] 903.2.6.1 High-piled storage. An automatic sprinkler system shall be provided in accordance with the *International Fire Code* in all buildings of Group M where storage of merchandise is in high-piled or rack storage arrays.

[F] 903.2.7 Group R. An automatic sprinkler system installed in accordance with Section 903.3 shall be provided throughout all buildings with a Group R fire area.

[F] 903.2.8 Group S-1. An automatic sprinkler system shall be provided throughout all buildings containing a Group S-1 occupancy where one of the following conditions exists:

1. A Group S-1 fire area exceeds 12,000 square feet (1115 m²);
2. A Group S-1 fire area is located more than three stories above grade plane; or
3. The combined area of all Group S-1 fire areas on all floors, including any mezzanines, exceeds 24,000 square feet (2230 m²).

[F] 903.2.8.1 Repair garages. An automatic sprinkler system shall be provided throughout all buildings used as repair garages in accordance with Section 406, as shown:

1. Buildings two or more stories in height, including basements, with a fire area containing a repair garage exceeding 10,000 square feet (929 m²).
2. One-story buildings with a fire area containing a repair garage exceeding 12,000 square feet (1115 m²).
3. Buildings with a repair garage servicing vehicles parked in the basement.

[F] 903.2.8.2 Bulk storage of tires. Buildings and structures where the area for the storage of tires exceeds 20,000 cubic feet (566 m³) shall be equipped throughout with an automatic sprinkler system in accordance with Section 903.3.1.1.

[F] 903.2.9 Group S-2. An automatic sprinkler system shall be provided throughout buildings classified as enclosed parking garages in accordance with Section 406.4 or where located beneath other groups.

Exception: Enclosed parking garages located beneath Group R-3 occupancies.

[F] 903.2.9.1 Commercial parking garages. An automatic sprinkler system shall be provided throughout buildings used for storage of commercial trucks or buses where the fire area exceeds 5,000 square feet (464 m²).

[F] 903.2.10 Windowless stories in all occupancies. An automatic sprinkler system shall be installed in the locations set forth in Sections 903.2.10.1 through 903.2.10.1.3.

Exception: Group R-3 and Group U.

[F] 903.2.10.1 Stories and basements without openings. An automatic sprinkler system shall be installed throughout every story or basement of all buildings where the floor area exceeds 1,500 square feet (139.4 m²) and where there is not provided at least one of the following types of exterior wall openings:

1. Openings below grade that lead directly to ground level by an exterior stairway complying with Section 1009 or an outside ramp complying with Section 1010. Openings shall be located in each 50

[F] 903.2.3 Group E. An *automatic sprinkler system* shall be provided for Group E occupancies as follows:

1. Throughout all Group E *fire areas* greater than 12,000 square feet (1115 m²) in area.
2. Throughout every portion of educational buildings below the lowest *level of exit discharge* serving that portion of the building.

   Exception: An *automatic sprinkler system* is not required in any area below the lowest *level of exit discharge* serving that area where every classroom throughout the building has at least one exterior *exit* door at ground level.

[F] 903.2.4 Group F-1. An *automatic sprinkler system* shall be provided throughout all buildings containing a Group F-1 occupancy where one of the following conditions exists:

1. A Group F-1 *fire area* exceeds 12,000 square feet (1115 m²).
2. A Group F-1 *fire area* is located more than three stories above *grade plane*.
3. The combined area of all Group F-1 *fire areas* on all floors, including any mezzanines, exceeds 24,000 square feet (2230 m²).

[F] 903.2.4.1 Woodworking operations. An *automatic sprinkler system* shall be provided throughout all Group F-1 occupancy *fire areas* that contain woodworking operations in excess of 2,500 square feet (232 m²) in area which generate finely divided combustible waste or use finely divided combustible materials.

[F] 903.2.5 Group H. *Automatic sprinkler systems* shall be provided in high-hazard occupancies as required in Sections 903.2.5.1 through 903.2.5.3.

[F] 903.2.5.1 General. An *automatic sprinkler system* shall be installed in Group H occupancies.

[F] 903.2.5.2 Group H-5. An *automatic sprinkler system* shall be installed throughout buildings containing Group H-5 occupancies. The design of the sprinkler system shall not be less than that required by this code for the occupancy hazard classifications in accordance with Table 903.2.5.2. Where the design area of the sprinkler system consists of a *corridor* protected by one row of sprinklers, the maximum number of sprinklers required to be calculated is 13.

[F] TABLE 903.2.5.2
GROUP H-5 SPRINKLER DESIGN CRITERIA

LOCATION	OCCUPANCY HAZARD CLASSIFICATION
Fabrication areas	Ordinary Hazard Group 2
Service corridors	Ordinary Hazard Group 2
Storage rooms without dispensing	Ordinary Hazard Group 2
Storage rooms with dispensing	Extra Hazard Group 2
Corridors	Ordinary Hazard Group 2

[F] 903.2.5.3 Pyroxylin plastics. An *automatic sprinkler system* shall be provided in buildings, or portions thereof, where cellulose nitrate film or pyroxylin plastics are manufactured, stored or handled in quantities exceeding 100 pounds (45 kg).

[F] 903.2.6 Group I. An *automatic sprinkler system* shall be provided throughout buildings with a Group I *fire area*.

Exception: An *automatic sprinkler system* installed in accordance with Section 903.3.1.2 or 903.3.1.3 shall be allowed in Group I-1 facilities.

[F] 903.2.7 Group M. An *automatic sprinkler system* shall be provided throughout buildings containing a Group M occupancy where one of the following conditions exists:

1. A Group M *fire area* exceeds 12,000 square feet (1115 m²).
2. A Group M *fire area* is located more than three stories above *grade plane*.
3. The combined area of all Group M *fire areas* on all floors, including any mezzanines, exceeds 24,000 square feet (2230 m²).
4. A Group M occupancy is used for the display and sale of upholstered furniture.

[F] 903.2.7.1 High-piled storage. An *automatic sprinkler system* shall be provided in accordance with the *International Fire Code* in all buildings of Group M where storage of merchandise is in high-piled or rack storage arrays.

[F] 903.2.8 Group R. An *automatic sprinkler system* installed in accordance with Section 903.3 shall be provided throughout all buildings with a Group R *fire area*.

[F] 903.2.9 Group S-1. An *automatic sprinkler system* shall be provided throughout all buildings containing a Group S-1 occupancy where one of the following conditions exists:

1. A Group S-1 *fire area* exceeds 12,000 square feet (1115 m²).
2. A Group S-1 *fire area* is located more than three stories above *grade plane*.
3. The combined area of all Group S-1 *fire areas* on all floors, including any mezzanines, exceeds 24,000 square feet (2230 m²).
4. A Group S-1 *fire area* used for the storage of commercial trucks or buses where the *fire area* exceeds 5,000 square feet (464 m²).

[F] 903.2.9.1 Repair garages. An *automatic sprinkler system* shall be provided throughout all buildings used as repair garages in accordance with Section 406, as shown:

1. Buildings having two or more *stories above grade plane*, including basements, with a *fire area* containing a repair garage exceeding 10,000 square feet (929 m²).
2. Buildings no more than one *story above grade plane*, with a *fire area* containing a repair garage exceeding 12,000 square feet (1115 m²).

Change Section 404.4.1 of the IPMC to read:

404.4.1 Room area. Every living room shall contain at least 120 square feet (11.2 m^2) and every bedroom shall contain at least 70 square feet (6.5 m^2) and every bedroom occupied by more than one person shall contain at least 50 square feet (4.6 m^2) of floor area for each occupant thereof.

Change Section 404.5 of the IPMC and add new Table 404.5 to the IPMC to read:

404.5 Overcrowding. Dwelling units shall not be occupied by more occupants than permitted by the minimum area requirements of Table 404.5.

TABLE 404.5
MINIMUM AREA REQUIREMENTS

SPACE	MINIMUM AREA IN SQUARE FEET		
	1-2 occupants	3-5 occupants	6 or more occupants
Living room[a,b]	120	120	150
Dining room[a,b]	No requirement	80	100
Bedrooms	Shall comply with Section 404.4.1		

For SI: 1 square foot = 0.093 m^2.
a. See Section 404.5.2 for combined living room/dining room spaces.
b. See Section 404.5.1 for limitations on determining the minimum occupancy area for sleeping purposes.

Add Sections 404.5.1 and 404.5.2 to the IPMC to read:

404.5.1 Sleeping area. The minimum occupancy area required by Table 404.5 shall not be included as a sleeping area in determining the minimum occupancy area for sleeping purposes. All sleeping areas shall comply with Section 404.4.

404.5.2 Combined spaces. Combined living room and dining room spaces shall comply with the requirements of Table 404.5 if the total area is equal to that required for separate rooms and if the space is located so as to function as a combination living room/dining room.

CHAPTER 5

PLUMBING FACILITIES AND FIXTURE REQUIREMENTS

Add Section 505.5 to the IPMC to read:

505.5 Inspection and testing of backflow prevention assemblies. Inspection and testing shall comply with Sections 505.5.1 and 505.5.2.

Add Section 505.5.1 to the IPMC to read:

505.5.1 Inspections. Inspections shall be made of all backflow prevention assemblies and air gaps to determine whether they are operable.

Add Section 505.5.2 to the IPMC to read:

505.5.2 Testing. Reduced pressure principle backflow preventer assemblies, double check-valve assemblies, double-detector check valve assemblies and pressure vacuum breaker assemblies shall be tested at the time of installation, immediately after repairs or relocation and at least annually. The testing procedure shall be performed in accordance with one of the following standards: ASSE 5010-1013-1, Sections 1 and 2; ASSE 5010-1015-1, Sections 1 and 2; ASSE 5010-1015-2; ASSE 5010-1015-3, Sections 1 and 2; ASSE 5010-1015-4, Sections 1 and 2; ASSE 5010-1020-1, Sections 1 and 2; ASSE 5010-1047-1, Sections 1, 2, 3 and 4; ASSE 5010-1048-1, Sections 1, 2, 3 and 4; ASSE 5010-1048-2; ASSE 5010-1048-3, Sections 1, 2, 3 and 4; ASSE 5010-1048-4, Sections 1, 2, 3 and 4; or CAN/CSA B64.10.

Change Section 507.1 of the IPMC to read:

VIRGINIA DEPARTMENT OF HOUSING AND COMMUNITY DEVELOPMENT
DIVISION OF BUILDING AND FIRE REGULATION

Code Change Form for the 2009 Code Change Cycle

Code Change Number:

Proponent Information (Check one): ☐ Individual ☐ Government Entity ☒ Company

Name: J. Kenneth Payne, Jr., AIA Representing: VSAIA

Mailing Address: 3200 Norfolk Street, Richmond, Virginia 23230

Email Address: kpayne@moseleyarchitects.com Telephone Number: 804-794-7555

Proposal Information

Code(s) and Section(s): 2009 IBC, Section 408.6 – Smoke barrier; and 408.8 – Windowless buildings.

Proposed Change (including all relevant section numbers, if multiple sections):

408.6 Smoke barrier. Occupancies ~~in~~ classified as Group I-3 shall have *smoke barriers* complying with Sections 408.8 and 710 to divide every *story* occupied by residents for sleeping, or any other *story* having an *occupant load* of 50 or more persons, into at least two smoke compartments.

Exception 1: Spaces having a direct *exit* or exits to one of the following, provided that the locking arrangement of the doors involved complies with the requirements for doors at the *smoke barrier* for the use condition involved:

1. A *public way*.
2. A building separated from the resident housing area by a 2-hour fire-resistance-rated assembly or 50 feet (15 240 mm) of open space.
3. A secured *yard* or *court* having a holding space 50 feet (15 240 mm) from the housing area that provides 6 square feet (0.56 m2) or more of refuge area per occupant, including residents, staff and visitors.
4. An *exit passageway*.

Exception 2: *Smoke barriers* are not required where occupancies classified as Group I-3 have an *occupant load* less than 50 and where those occupancies are not contiguous to each other.

408.9 ~~Windowless buildings.~~ Smoke control. ~~For the purposes of this section, a windowless building or portion of a building is one with nonopenable windows, windows not readily breakable or without windows. Windowless buildings shall be provided with an engineered smoke control system to provide a tenable environment for exiting from the smoke compartment in the area of fire origin in accordance with Section 909 for each windowless smoke compartment.~~ Provide a smoke control system in accordance with this section and Section 909 for each smoke compartment. The smoke control system shall provide an environment capable of the timely evacuation and relocation of occupants from the smoke compartment where the fire originated.

Exception: Smoke compartments with openable windows or windows that are readily breakable.

Supporting Statement (including intent, need, and impact of the proposal):

The application and interpretation of smoke barriers, smoke compartments, windowless buildings, and smoke control systems, oftentimes varies among building officials because the "path" of determination can be confusing. Should small holding cells adjacent to courtrooms have the same smoke control system, smoke compartments, and smoke barriers as a jail or prison? Should an office area have a smoke control system because it is on the same "story" as an I-3? Should a kitchen have a smoke control system because it is a "portion of a building" that also has an I-3 occupancy?

408.6 Smoke barrier: The proposal makes it clear that smoke barriers apply *only* to those spaces classified as I-3. The current text implies that *any* occupancy in an I-3 requires smoke barriers (provided it meets the two conditions). This might include a kitchen that is on the other side of a separated corridor; or a dining room located down the corridor; or an office suite located 300 feet away...all because they are "occupancies in Group I-3" and/or are on the same "story" as a Group I-3. Since the proposed text clarifies that smoke barriers apply only to spaces that *are* Group I-3; the kitchen (B), dining room (A-2), and office suite (B) would not be required to have smoke barriers...thus, they would not be required to have smoke compartments...thus they would not be required to have a smoke control system.

> **Exception 1**: The addition of "exit passageway" provides greater flexibility and another option of exiting the occupants, while avoiding the need for smoke barriers, and since exit passageways are rated construction (not unlike what is allowed by Exception 1.2), this meets the spirit and functional intent of the code.
>
> **Exception 2**: The exception attempts to clarify conditions that might exist (e.g., courthouses) where you might have "islands" or "pockets" (not smoke compartments) of I-3 located throughout another occupancy (e.g., courtrooms) and where each "island" has less than 50 occupants. The need for smoke barriers would not be required; thus, smoke compartments would not be required; thus, a smoke control system would not be required. However, if you have three (3) such "islands" (each with 20 occupants), it might be interpreted (and has been interpreted on numerous occasions) that you exceed the 50 occupants "per story." To the extreme, you might have twenty (20) such "islands" of three occupants each on the same story. Is it the intent of the code to require a smoke control system in each of these "islands" and subsequently for the entire building?
>
> As long as these "islands" or "pockets" are not contiguous to each other (i.e., separated from each other with other spaces not classified as I-3 between them), and the occupant load of *each* is less than 50, then they are exempt from the need for smoke barriers.

408.9 ~~Windowless buildings.~~ Smoke control. This paragraph changes terms so often, it causes confusion among designers and LAHJ. The text begins with *windowless* buildings, and then jumps immediately to *any* building (i.e., "portions"). It then requires a smoke control system in a windowless *building*, but ends the paragraph requiring a smoke control system in each smoke *compartment*. So, is a smoke control system required in:

- Only windowless buildings
- In portions of buildings, regardless of whether it is windowless or not
- Only smoke compartments
- All of the above

The confusion has meant buildings with I-3 occupancies throughout the Commonwealth are not designed the same. Some LAHJ require <u>all</u> areas in a windowless building to have a smoke control system. Some LAHJ require a smoke control system only in each smoke compartment, and not throughout the entire building. Some LAHJ require other areas of a "regular" building (not a windowless building, but in a building that has smoke compartments) to have a smoke control system.

Also, is the issue "windowless buildings" or "smoke control?"

If one assumes the code wants a smoke control system only in a windowless smoke compartment (as the last sentence implies), then why confuse matters with windowless buildings and portions thereof? The proposed text attempts to clarify that a smoke control system is required in smoke compartments only, and deletes the confusion of adding windowless buildings or portion of buildings. An exception was added to omit the smoke control system if there are methods by which the products of combustion could be ventilated.

"Tenable" was deleted since it is not specifically defined by the building code, and can be interpreted to mean, "capable of being occupied" or "capable of being held or maintained", which is the opposite of what needs to occur – evacuate the occupants from the smoke compartment where the fire originated – not allow the occupants to remain in and occupy the smoke compartment.

It is believed the intent is to quantify when a smoke control system is required, and the term "windowless building" was introduced to help determine when it was required. However, based on the above, if we delete the terms "windowless building" from 408.9, then we need to re-title the section. The new title appears to get straight to the intent of the code without confusing and unnecessary language.

When the proposed *changes* to Section 408.6 are combined with the *existing* text in Section 408.6.1 and the proposed *changes* to Section 408.9, the need for smoke barriers, smoke compartments, and a smoke control system should be simplified and can be applied equally throughout the Commonwealth.

Submittal Information

Date Submitted: April 23, 2009

The proposal may be submitted by email as an attachment, by fax, by mail, or by hand delivery.

Please submit the proposal to:

DHCD DBFR TASO (Technical Assistance and Services Office)
The Jackson Center
501 N. 2nd Street
Richmond, VA 23219-1321

Email Address: taso@dhcd.virginia.gov
Fax Number: (804) 371-7092
Phone Numbers: (804) 371-7140 or (804) 371-7150

VIRGINIA DEPARTMENT OF HOUSING AND COMMUNITY DEVELOPMENT
DIVISION OF BUILDING AND FIRE REGULATION

Code Change Form for the 2009 Code Change Cycle

Code Change Number:_____

Proponent Information (Check one): ☒Individual ☒Government Entity ☐Company

Name: Ron Clements

Representing: Chesterfield County Building Inspection Dept.

Mailing Address: 9800 Government Center Parkway

Email Address: clementsro@chesterfield.gov

Telephone Number: (804) 751-4163

Proposal Information

Code(s) and Section(s): ***410.5.3, proposed 410.6 and sub-sections, 1015.6 and sub-sections***

Proposed Change (including all relevant section numbers, if multiple sections):

Delete and substitute as follows:

~~**Section 410.5.3 Stage Exits**. At least one approved means of egress shall be provided from each side of the stage and from each side of the space under the stage. At least one means of escape shall be provided from each fly gallery and from the gridiron. A steel ladder, alternating tread stairway or spiral stairway is permitted to be provided from the gridiron to a scuttle in the stage roof.~~

410.6 Means of egress. Except as modified or as provided for in this section, the provisions of Chapter 10 shall apply.

410.6.1 Arrangement. Where two or more exits or exit access doorways are required per section 1015.1 from the stage or area beneath the stage, at least one exit or exit access doorway shall be provided on each side of the stage or area beneath the stage.

410.6.2 Stairway and ramp enclosure. Stairways and ramps serving the stage are not required to be enclosed.

410.6.3 Fly Gallery. At least one exit or exit access shall be provided from fly galleries and the maximum length of exit access travel shall not exceed 300 feet for buildings without a sprinkler system and 400 feet for buildings equipped throughout with an automatic sprinkler system in accordance with Section 903.3.1.1. The following exit access components are permitted when serving only the fly gallery:

1. Unenclosed interior stairs.
2. Spiral stairs.
3. Stairways with a minimum width of 22 inches (559 mm).
4. Alternating tread devices.
5. Permanently installed Ladders.

Renumber as follows:
410.~~6~~ 7 Automatic Sprinkler System. (no change, renumber only)

410.~~7~~ 8 Standpipes. (no change, renumber only)

Delete without substitution as follows:

~~**1015. 6 Stage means of egress.** Where two means of egress are required, based on the stage size or occupant load, one means of egress shall be provided on each side of the stage.~~

~~**1015. 6.1 Gallery, gridiron and catwalk means of egress.** The means of egress from lighting and access catwalks, galleries and gridirons shall meet the requirements for occupancies in Group F-2.~~

~~**Exceptions:**~~
~~1. A minimum width of 22 inches (559 mm) is permitted for lighting and access catwalks.~~

~~2. Spiral stairs are permitted in the means of egress.~~
~~3. Stairways required by this subsection need not be enclosed.~~
~~4. Stairways with a minimum width of 22 inches (559 mm), ladders, or spiral stairs are permitted in the means of egress.~~
~~5. A second means of egress is not required from these areas where a means of escape to a floor or to a roof is provided. Ladders, alternating tread devices or spiral stairs are permitted in the means of escape.~~
~~6. Ladders are permitted in the means of egress.~~

Currently special means of egress provisions for stages are located in two separate sections and chapters, 410.5.3 and 1015.6. The separate sections are in conflict with one another. Section 410.5.3 requires two exit access routes, one from each side of the stage regardless of occupant load or travel distance. Section 1015.6, however, allows a singe exit or exit access route if common path of travel and occupant load limits per table 1015.1 are met. Section 410.5.3 allows a singe exit or exit access from the fly gallery or the gridiron without a travel distance restriction. Section 1015.6.1 requires the means of egress for the gallery and gridiron to meet means of egress provisions for F-2, which can require multiple exits or exit access routes and limits the travel distance per group F-2 requirements. Current section 1015.6.1 also refers to gallery instead of the currently defined term fly gallery that is referenced in section 410.5.3.

The proposed change also removes the reference to catwalks and gridirons from the means of egress provisions. Catwalks are not defined by the IBC but by common definition these are service walkways that are not normally occupied and therefore do not need a means of egress and are not addressed by chapter 10. Additionally gridirons are defined per 410.2, as structural framing used to support scenery, therefore a gridiron by definition is not an occupied space that requires a means of egress per chapter 10. References to means of escape were removed because they are not prohibited without the reference; they can still be used because they are not taking the place of a means of egress.

The travel distances of 300 and 400 feet (non-sprinklered/sprinklered) for the fly gallery were inserted because they are the travel distances for group F-2 referenced in current section 1015.6.1. This is a more straightforward method to prescribe the travel distance limitations then referencing group F-2. The allowance for the use of a ladder in the means of egress serving a fly gallery was changed to require the ladder be permanently installed so that a movable ladder cannot be used for egress.

Finally the code change puts the special requirements completely in chapter 4 where they belong. The reason that the two sections, one in chapter four and one in chapter 10, were in conflict is because having the provisions in two separate code text locations set up the scenario where changes were not made to each section to keep them synchronized. Special provisions of chapter 4 do not need to be repeated in the code sections that chapter 4 overrides.

Cost Impact: The code change will reduce the cost of construction by allowing for smaller stages to be constructed with one exit or exit access instead of two. Additional cost savings will be provided by the reduced confusion and misapplication of the code provisions for stage means of egress; inconsistent and confusion code provisions cost extra money to the code users.

Submittal Information

Date Submitted: _____

The proposal may be submitted by email as an attachment, by fax, by mail, or by hand delivery.

Please submit the proposal to:

DHCD DBFR TASO (Technical Assistance and Services Office)
The Jackson Center
501 N. 2nd Street
Richmond, VA 23219-1321

Email Address: taso@dhcd.virginia.gov
Fax Number: (804) 371-7092
Phone Numbers: (804) 371-7140 or (804) 371-7150

VIRGINIA DHCD

VIRGINIA DEPARTMENT OF HOUSING AND COMMUNITY DEVELOPMENT
DIVISION OF BUILDING AND FIRE REGULATION

Code Change Form for the 2009 Code Change Cycle

Code Change Number:_____

Proponent Information (Check one): ☒Individual ☒Government Entity ☐Company

Name: Ron Clements

Representing: Chesterfield County Building Inspection Dept.

Mailing Address: 9800 Government Center Parkway

Email Address: clementsro@chesterfield.gov

Telephone Number: (804) 751-4163

Proposal Information

Code(s) and Section(s): 1007.1

Proposed Change (including all relevant section numbers, if multiple sections):

Revise as follows:

1007.1 (IFC 1007.1) Accessible means of egress required. Accessible means of egress shall comply with this section. Accessible spaces shall be provided with not less than one accessible means of egress. Where more than one ~~means of egress~~ exit or exit access doorway is required by Section 1015.1 or 1021.1 from any accessible space, each accessible portion of the space shall be served by not less than two accessible exits or exit access doorways on accessible routes ~~accessible means of egress~~. Where two accessible exits or exit access doorways are required from a space by this section they shall be arranged in accordance with section 1015.2.1.

Exceptions:
1. Accessible means of egress are not required in alterations to existing buildings.
2. One accessible means of egress is required from an accessible mezzanine level in accordance with Section 1007.3, 1007.4 or 1007.5.
3. In assembly areas with sloped or stepped aisles, one accessible means of egress is permitted where the common path of travel is accessible and meets the requirements in Section 1028.8.

Supporting Statement (including intent, need, and impact of the proposal):

This purpose of this change is to require that when two accessible means of egress routes are required the exits or exit access doorways composing the required accessible means of egress system are arranged with the minimum separation required per section 1015.2.1. The current text requires that when two or more exits or exit access doorways are required that two must be accessible, however there is no clear requirement that the two accessible exits or exit access doorways are adequately separated from one another to provided the safety of the remoteness required per 1015.2.1.

As an example: A building required to have two exits can be designed with two doors in the front separated by 10 feet and a rear exit door at the back of the building separated by the depth of the building. The front and rear exit doors meet the two exits required and are separated by over one half the diagonal of the building therefore they are code compliant per sections 1015 and 1021. The rear exit door has exterior stairs and the designer does not want to design them as accessible so the designer designates the second front door as the second accessible exit. This is currently code compliant even though only 10 feet separate the two front exit doors. This code change will require the same separation for accessible exits as is required for all exits.

This code change also changes the use of the term "means of egress" to "exit or exit access doorway" in the second sentence to maintain consistent terminology with sections 1015 and 1021.

VIRGINIA DEPARTMENT OF HOUSING AND COMMUNITY DEVELOPMENT
DIVISION OF BUILDING AND FIRE REGULATION

Code Change Form for the 2009 Code Change Cycle

Code Change Number:_____

Proponent Information (Check one): ☒Individual ☒Government Entity ☐Company

Name: Ron Clements

Representing: Chesterfield County Building Inspection Dept.

Mailing Address: 9800 Government Center Parkway

Email Address: clementsro@chesterfield.gov

Telephone Number: (804) 751-4163

Proposal Information

Code(s) and Section(s): 1103.2.7

Proposed Change (including all relevant section numbers, if multiple sections):

Revise as follows:

1103.2.7 Raised areas, safety and security. Raised areas used primarily purposes of security, life safety or fire safety including, but not limited to, observation galleries, prison guard towers, fire towers or lifeguard stands, are not required to be accessible or be served by an accessible route.

Add new section as follows:

1103.2.8 Raised areas in places of religious worship. Raised areas used primarily for religious ceremonies in a place of religious worship are not required to be accessible or be served by an accessible route.

Renumber remaining sections

Supporting Statement (including intent, need, and impact of the proposal):

This change has been submitted to the ICC for the 2012 edition cycle. The current accessibility provisions of chapter 11 in the IBC and the ICC/ANSI A117.1 standard were developed from the Americans With Disabilities act and in large part by people involved in the ADA. The Americans with Disabilities act section 307 exempts religious organizations and religions buildings from compliance with the act. Do to this exemption accessibility to specific church architectural elements has never been developed and is not addressed in the code or A117.1standard. Providing access routes to elevated areas such as Altars, bimahs, baptisteries, pulpits, platforms and other elevated areas within churches used for the performance of church religious services is very difficult and costly. Furthermore even if an accessible route is provided to these areas there is no guidance to make a religious feature such as a baptistery accessible. Since there is already an accessibility exemption for raised areas used for safety and security this proposal adds "safety and security" to the existing raised area exemption and adds this new exemption directly following the existing raised area exemption.

Submittal Information

VIRGINIA DEPARTMENT OF HOUSING AND COMMUNITY DEVELOPMENT
DIVISION OF BUILDING AND FIRE REGULATION

Code Change Form for the 2009 Code Change Cycle

Code Change Number:_____

Proponent Information (Check one): ☐ Individual ☐ Government Entity ☒ Company

Name: J. Kenneth Payne, Jr., AIA Representing: VSAIA

Mailing Address: 3200 Norfolk Street, Richmond, Virginia 23230

Email Address: kpayne@moseleyarchitects.com Telephone Number: 804-794-7555

Proposal Information

Code(s) and Section(s): 2009 IBC Section 903.3.1.1.1 – Exempt locations [for automatic sprinklers]

Proposed Change (including all relevant section numbers, if multiple sections):

Add exemption #6, as follows:

[F] 903.3.1.1.1 Exempt locations. Automatic sprinklers shall not be required in the following rooms or areas where such rooms or areas are protected with an approved automatic fire detection system in accordance with Section 907.2 that will respond to visible or invisible particles of combustion. Sprinklers shall not be omitted from any room merely because it is damp, of fire-resistance-rated construction or contains electrical equipment.

1. Any room where the application of water, or flame and water, constitutes a serious life or fire hazard.

2. Any room or space where sprinklers are considered undesirable because of the nature of the contents, when approved by the fire code official.

3. Generator and transformer rooms separated from the remainder of the building by walls and floor/ceiling or roof/ceiling assemblies having a fire-resistance rating of not less than 2 hours.

4. Rooms or areas that are of noncombustible construction with wholly noncombustible contents.

5. Fire service access elevator machine rooms and machinery spaces.

6. Elevator machine rooms and elevator machine spaces for occupant evacuation elevators.

Supporting Statement (including intent, need, and impact of the proposal):

Comports with Section 3008.6.1, and locates all exempted locations for automatic sprinklers in one place within the code. Another option might combine the proposed text with exemption #5 or reword #5 to include all elevator machine rooms and machinery spaces, no matter whether it is for "fire service access" or serving "occupant evacuation elevators."

Submittal Information

Date Submitted: April 16, 2009

The proposal may be submitted by email as an attachment, by fax, by mail, or by hand delivery.

Please submit the proposal to:

DHCD DBFR TASO (Technical Assistance and Services Office)
The Jackson Center
501 N. 2nd Street
Richmond, VA 23219-1321

Email Address: taso@dhcd.virginia.gov
Fax Number: (804) 371-7092
Phone Numbers: (804) 371-7140 or (804) 371-7150

VIRGINIA DEPARTMENT OF HOUSING AND COMMUNITY DEVELOPMENT
DIVISION OF BUILDING AND FIRE REGULATION

Code Change Form for the 2009 Code Change Cycle

Code Change Number:_____

Proponent Information (Check one): ☐ Individual ☐ Government Entity ☒ Company

Name: J. Kenneth Payne, Jr., AIA Representing: VSAIA

Mailing Address: 3200 Norfolk Street, Richmond, Virginia 23230

Email Address: kpayne@moseleyarchitects.com Telephone Number: 804-794-7555

Proposal Information

Code(s) and Section(s): 2009 IBC Section 903.3.1.1.1 – Exempt locations [for automatic sprinklers]

Proposed Change (including all relevant section numbers, if multiple sections):

3006.4 Machine rooms and machinery spaces. Elevator machine rooms, rooms housing elevator controllers, and machinery spaces shall be enclosed with *fire barriers* constructed in accordance with Section 707 or *horizontal assemblies* constructed in accordance with Section 712, or both. The *fire-resistance rating* shall not be less than the required rating of the hoistway enclosure served by the machinery. Openings in the *fire barriers* shall be protected with assemblies having a *fire protection rating* not less than that required for the hoistway enclosure doors.

Exceptions:

1. Where machine rooms, rooms housing elevator controllers, and machinery spaces do not abut and have no openings to the hoistway enclosure they serve the *fire barriers* constructed in accordance with Section 707 or *horizontal assemblies* constructed in accordance with Section 712, or both, shall be permitted to be reduced to a 1-hour *fire-resistance rating*.

2. In buildings four *stories* or less above *grade plane* when machine rooms, rooms housing elevator controllers, and machinery spaces do not abut and have no openings to the hoistway enclosure they serve, the machine room and machinery spaces are not required to be fire-resistance rated.

Supporting Statement (including intent, need, and impact of the proposal):

Especially with Machine-room-less (MRL) elevators, the elevator controller is oftentimes remotely located, sometimes in a small "closet". There is confusion as to whether the controller constitutes "equipment" or if the room in which it is located is considered a "machine room." ASME A17.1-2004, Section 2.7.1.1.1, seems to imply that controllers ("control equipment") shall be separated by a fire-resistive enclosure, based on the text below:

2.7.1.1.1 Spaces containing machines, control equipment, sheaves, and other machinery shall be separated from the remainder of the building by a fire-resistive enclosure conforming to the requirements of the building code.

Some LAHJ have required rated enclosures and some have not. Since the referenced standard cannot dictate building construction requirements, by adding the proposed text, it clarifies that rooms housing elevator controllers are considered "machine rooms", and therefore, must be designed according to Section 3006.4.

However, if the consensus is that rooms housing elevator controllers do not need to be enclosed in rated construction, then that should be clearly stated. The following proposed text would clarify this position:

3006.4 Machine rooms and machinery spaces. Elevator machine rooms and machinery spaces shall be enclosed with *fire barriers* constructed in accordance with Section 707 or *horizontal assemblies* constructed in accordance with Section 712, or both. The *fire-resistance rating* shall not be less than the required rating of the hoistway enclosure served by the machinery. Openings in the *fire barriers* shall be protected with assemblies having a *fire protection rating* not less than that required for the hoistway enclosure doors.

Exceptions:

1. Where machine rooms and machinery spaces do not abut and have no openings to the hoistway enclosure they serve the *fire barriers* constructed in accordance with Section 707 or *horizontal assemblies* constructed in accordance with Section 712, or both, shall be permitted to be reduced to a 1-hour *fire-resistance rating*.

2. In buildings four *stories* or less above *grade plane* when machine rooms and machinery spaces do not abut and have no openings to the hoistway enclosure they serve, the machine room and machinery spaces are not required to be fire-resistance rated.

3. Rooms housing elevator controllers that do not abut and have no openings to the hoistway enclosure they serve are not required to be fire-resistance rated.

Submittal Information

Date Submitted: April 16, 2009

The proposal may be submitted by email as an attachment, by fax, by mail, or by hand delivery.

Please submit the proposal to:

DHCD DBFR TASO (Technical Assistance and Services Office)
The Jackson Center
501 N. 2nd Street
Richmond, VA 23219-1321

Email Address: taso@dhcd.virginia.gov
Fax Number: (804) 371-7092
Phone Numbers: (804) 371-7140 or (804) 371-7150