AGENDA

STATE BUILDING CODE TECHNICAL REVIEW BOARD

Friday, April 21, 2017 - 10:00 a.m.

Henrico County Manager's Conference Room
4301 E. Parham Road, Henrico, Virginia 23228

I. Call to Order and Roll Call **(Tab 1)**

II. Approval of February 17, 2017 Minutes **(Tab 2)**

III. Public Comment

IV. Approval of Final Order **(Tab 3)**

In Re: Appeal of Richard Criqui
Appeal No. 16-8

V. Appeal Hearing **(Tab 4)**

In Re: Appeal of Gregory & Leah Thorpe
Appeal No. 16-11
(Hearing continued from February 17, 2017 meeting)

VI. Interpretation Request **(Tab 5)**

City of Suffolk

VII. Secretary's Report **(Tab 6)**

STATE BUILDING CODE TECHNICAL REVIEW BOARD
Updated December 27, 2016)

J. Robert Allen, CBO
Chairman
(Representing the Virginia Building & Code Officials Association)

James R. Dawson
Vice Chairman
(Representing the Virginia Fire Chiefs Association)

Matthew Arnold
(Representing the American Institute of Architects)

W. Keith Brower, Jr.
(Representing the Commonwealth at large)

Vince Butler
(Representing the Virginia Homebuilders Association)

J. Daniel Crigler
(Representing the Virginia Plumbing-Heating-Cooling Contractors Association)

Alan Givens
(Representing the Virginia Plumbing-Heating-Cooling Contractors Association)

Joseph A. Kessler, III
(Representing the Associated General Contractors of Virginia)

Eric Mays, PE, CBO
(Representing the Virginia Building & Code Officials Association)

E. G. (Rudy) Middleton III
(Electrical Contractor)

Joanne D. Monday
(Representing the Virginia Building Owners and Managers Association)

Patricia S. O'Bannon
(Representing the Commonwealth at Large)

W. Shaun Pharr, Esq.
(Representing the Apartment and Office Building Association of Metropolitan Washington)

Aaron L. Zdinak, PE
(Representing the Virginia Society of Professional Engineers)

Justin I. Bell, Esq., Board counsel
Assistant Attorney General
Financial Law and Government Support Section
Office of the Attorney General

Alan McMahan, CBO
Secretary
Office: (804) 371-7175
Main Office: (804) 371-7150
Cell: (804) 627-3689
alan.mcmahan@dhcd.virginia.gov

DRAFT MINUTES

STATE BUILDING CODE TECHNICAL REVIEW BOARD
MEETING

Friday, February 17, 2017

RICHMOND, VIRGINIA

Members Present	Members Absent
Mr. J. Robert Allen, Chairman	Mr. Matthew Arnold
Mr. W. Keith Brower	Mr. Vince Butler
Mr. J. Daniel Crigler	Mr. James R. Dawson, Vice Chairman
Mr. Joseph A. Kessler, III	Mr. Alan D. Givens
Mr. Eric Mays, PE	Mr. W. Shaun Pharr, Esq.
Mr. E.G. Middleton, III	
Ms. Joanne D. Monday	
Ms. Patricia S. O'Bannon	
Mr. Aaron Zdinack, PE	

Call to Order	The meeting of the State Building Code Technical Review Board ("Review Board") was called to order by the Chairman at approximately 10:15 a.m.
Roll Call	The attendance was established by the Secretary, Alan W. McMahan, Secretary, and constituted a quorum. Mr. Justin I. Bell, Assistant Attorney General in the Office of the Attorney General, was present and serving as the Board's legal counsel.
Approval of Minutes	Mr. Mays moved to approve the minutes of the January 20, 2017 meeting as presented in the Review Board members' agenda package. The motion was seconded by Ms. Monday and passed unanimously with no abstentions.
Public Comment	The Chairman opened the floor for public comment. Three parties had pre-registered to offer comment, Ms. Cynthia M. Owens, and Ms. Cheri B. Hainer and Mr. Tobias Eisenlohr with the City of Virginia Beach. Ms. Owens addressed the Board relative to her appeal heard at the January 20, 2017 Review Board meeting (Appeal No. 16-6). Mr. Eisenlohr then addressed the Board concerning Ms. Owens' appeal.

Final Orders

Appeal of Cynthia M. Owens; Appeal No. 16-6:

After review and consideration, Mr. Mays moved to approve the final order as presented in the Review Board members' agenda package. The motion was seconded by Mr. Crigler and passed with no abstentions.

Appeal of Isle of Wight County; Appeal No. 16-9:

After review and consideration, Mr. Mays moved to approve the final order as presented in the Review Board members' agenda package. The motion was seconded by Mr. Kessler passed with no abstentions.

New Business

Appeal of Richard Criqui; Appeal No. 16-8:

An appeal hearing convened with the Chairman serving as the presiding officer. The appeal concerned the refusal of the County of Rockbridge County's building code office to cite a contractor for alleged code violations of the 2012 Virginia Construction Code (VCC) at the appellant's home at 135 Ponds Drive in Lexington.

The following persons were sworn in and given the opportunity to present testimony:

Richard Criqui, property owner
Larry Engle, homebuilder
Kenny Wilson, for Rockbridge County
Jason Snider, for Rockbridge County

Also present were:

Vicky Huffman, Esq., legal counsel for Rockbridge County

The following exhibits were submitted by Mr. Criqui, without objection, to supplement the Review Board members' agenda package:

Exhibit A - An outline of the documents in the Board members' agenda package

Appeal of Richard Criqui; Appeal No. 16-8 (cont'd.):

Exhibit B – Suggested Revisions to the Staff Document
Exhibit C – A summary of the appeal issues
Exhibit D – Color photographs

In addition, during his testimony, Criqui requested that the Chairman allow him to present several of the photos in the agenda package to the Board using audio-visual equipment to better illustrate the alleged violations. The Chairman consented.

After testimony concluded, the Chairman closed the hearing and stated a decision from the Review Board members would be forthcoming and the deliberations would be conducted in open session. It was further noted that a final order reflecting the decision would be considered at a subsequent meeting and, when approved, would be distributed to the parties and would contain a statement of further right of appeal.

Decision: Appeal of Richard Criqui; Appeal No. 16-8:

After deliberation, Mr. Mays moved to overturn the building official and local appeals board and require a notice of violation be issued to the builder on VCC Section R401.3 related to the last sentence of the exception which requires that impervious surfaces within 10 feet of the building foundation be sloped a minimum of 2.0 percent away from the building. The motion was seconded by Mr. Crigler and passed unanimously.

Mr. Mays then moved to uphold the decision of the building official and the local appeals board on VCC Section R405.1 concerning the drainage systems around the home's foundation. The motion was seconded by Ms. O'Bannon and passed unanimously.

Mr. Mays then moved to overturn the building official and the local appeals board and require a notice of violation be issued on VCC Section R408.6 with respect to the height of the crawl space grade relative to the finished exterior grade. The motion was seconded by Crigler and passed unanimously.

Decision: Appeal of Richard Criqui; Appeal No. 16-8 (cont'd.):

Mr. Mays then moved to uphold the decision of the building official and the local appeals board that VCC Section R401.4 does delegate responsibility to the building official for determining whether to require a soil test. The motion was seconded by Mr. Middleton and passed unanimously.

Mr. Mays then moved to overturn the building official and local appeals board and require a notice of violation be issued to the builder regarding Section R403.1.8.1 due to the evidenced presence of expansive soils on the subject property.

Appeal of Gregory & Leah Thorpe; Appeal No. 16-11:

A hearing convened with the Chairman serving as the presiding officer. The appeal concerned alleged violations of the 2012 VCC on in a new home constructed at 16300 Longlands Road in Chesterfield County, owned by Gregory and Leah Thorpe.

The following persons were sworn in and given the opportunity to present testimony:

Gregory & Leah Thorpe, property owner
Greg Holt, for Finer Homes
Ron Clements, for Chesterfield County
Richard Witt, for Chesterfield County

The following exhibits were submitted by the Thorpes to supplement the Review Board members' agenda package:

Exhibit A – Larger photographs and documents from the agenda package, and several new documents, listed as Sub 1 through Sub 8.

The County objected to Sub 5 and Sub 8 as they were not presented at the local appeals board. After the Thorpes agreed to not discuss Sub 5 and Sub 8 during their testimony, the

Appeal of Gregory & Leah Thorpe; Appeal No. 16-11 (cont'd):

Chairman accepted it into evidence.

After the appellant's testimony began, the Chairman informed the parties that due to the later hour the appeal would have to continued for additional testimony, final statements and questioning by the Board members at the next Review Board meeting.

Adjournment

The meeting was adjourned by motion of Mr. Allen at approximately 5:40 p.m.

Approved: _____

_____
Chairman, State Building Code Technical Review Board

_____
Secretary, State Building Code Technical Review Board

Virginia:

BEFORE THE

STATE BUILDING CODE TECHNICAL REVIEW BOARD (REVIEW BOARD)

IN RE: Appeal of Richard Criqui
Appeal No. 16-8

Hearing Date: February 17, 2017

DECISION OF THE REVIEW BOARD

I. PROCEDURAL BACKGROUND

The State Building Code Technical Review Board (Review Board) is a Governor-appointed board established to rule on disputes arising from application of regulations of the Department of Housing & Community Development. See §§ 36-108 and 36-114 of the Code of Virginia. The Review Board's proceedings are governed by the Virginia Administrative Process Act. See § 36-114 of the Code of Virginia.

II. CASE HISTORY

In August of 2014, the Rockbridge County Building Department (local code office) issued a building permit, under the 2012 VCC, to Larry and Eileen Engle (Engle), a licensed Class A contractor, for the construction of a single-family dwelling on property they owned at 135 Ponds Drive in Lexington.

In May of 2015, the local code office issued a Certificate of Occupancy for the dwelling to Engle who then sold it to Richard and Elizabeth Criqui (Criqui). Two months later, Criqui took occupancy of the dwelling.

In June of 2016, Criqui noticed standing water in the crawl space and attributed it to seasonal and chronic groundwater, and storm water-related issues. As a result, Criqui asked the local code office to cite Engle for potential VCC violations concerning the construction of the home's footing and foundation.

In July of 2016, the local code office notified Criqui it would not issue a Notice of Violation because Engle had met the requirements of the "2012 International Residential Code with Virginia amendments."[1]

Subsequently, Criqui appealed the local code office's decision to the Rockbridge County Board of Building Code Appeals (local appeals board) which heard the appeal in September of 2016 and ruled to uphold the local code office's decision.

Criqui then further appealed to the Review Board and a hearing was held before the Review Board with Criqui; the Engles; and the County's building official and legal counsel, present.

1 Excerpted from Rockbridge County letter dated July 19, 2016

Consequently, Review Board staff conducted an informal fact-finding conference for the appeal, prepared the record and scheduled a hearing before the Review Board. In February of 2017, a hearing before the Review Board was conducted with Criqui, the Engles and representatives of the local code office, in attendance.

III. FINDINGS OF THE REVIEW BOARD

Criqui appeals the local code office's July 19, 2016 decision to not issue a Notice of Violation to Engle on the design and construction of Criqui's footing and foundation, and the local appeals board upholding of that determination. Subsequent to the testimony on the appeal, the Review Board identified the following five items for consideration:

1. Whether a violation of VCC § R401.3 (*Drainage*) exists relative to the exterior grading adjacent to the dwelling

Section R401.3 requires, in part, that lots be graded to drain surface water away from foundation walls and fall a minimum of 6 inches within the first 10 feet from foundation walls. On this issue, Criqui testified that Engle did not slope the finished grade around the home or the asphalt driveway away from the foundation, which he asserted contributed to the standing water in the crawl space. The local

code office testified the slope of the exterior grading adjacent to the foundation passed final inspection. The office also testified that the asphalt driveway between the house and the detached garage sloped the required minimum of 2.0 percent away from the building, as allowed in the exception to VCC § R401.3 for impervious surfaces. Engle agreed with the facts on this issue as presented by the local code office.

On this matter, the Review Board finds that while there is disagreement between Criqui and Engle about subsequent grading around the foundation, the photographic evidence submitted by Criqui plainly shows that the impervious surface (i.e. the asphalt driveway) abutting the foundation, does not, in fact, slope away from the foundation a minimum of 2.0 percent within the first ten feet of the building, a clear violation of VCC § R401.3.

2. Whether a violation of VCC § 405.1 (*Concrete or masonry foundations*) exists relative to the dwelling's drainage system

During their testimony, all parties conceded that a perimeter drain was installed below grade around the dwelling's foundation; however, Criqui alleged a potential code violation of VCC § R405.1 exists concerning its installation. His assertion was derived from concern about the standing water in the crawl space of the dwelling. While photographs submitted by Criqui show areas of standing water in the crawl space, no evidence was provided proving it was caused by the improper

installation of the dwelling's drainage system. During testimony, both Engle and the County code office contended that the drains were installed in accordance with VCC § R405.1. Consequently, the Review Board finds that no violation of VCC § R405.1 exists in this situation.

3. Whether a violation of VCC § R408.6 (*Finished grade*) exists relative to the height of the under-floor space

This issue concerns the finished grade of the under-floor surface and its height relative to the outside finished grade. During testimony, all parties conceded that the finished grade of the under-floor surface was higher than the outside grade.

Section R408.6 requires that the finished grade of under-floor surfaces be as high as the outside finished grade, where surface water does not readily drain from the building site, unless an approved drainage system is provided. From the photos submitted, the Review Board finds that the standing water in the crawl space clearly shows that the surface water does not readily drain from the building site; and since there was no evidence provided which indicated that an approved drainage system was installed in the foundation walls to remedy the condition, the Review Board finds that a violation of VCC § 408.6 does exist.

4. Whether a violation of VCC § R401.4 (*Soil tests*) exists relative to soil testing methodologies.

During testimony, Criqui alleged that the County's Soil Policy was deficient and inconsistent with the spirit and intent of the VCC. Despite his contention, the Chairman explained to the parties that the Review Board does not have jurisdiction over local government policies, in this case, a local soil policy. In this matter, the Review Board finds that VCC § R401.4 explicitly assigns responsibility for determining whether to require a soil test for a given property to the local building official. As a result, the Review Board finds that no violation of VCC § R401.4 exists.

5. Whether a violation of VCC § R403.1.8 (*Foundations on expansive soils*) exists relative to the classification of soil below the dwelling.

During testimony, Criqui referenced a geotechnical soil report from ECS in the Review Board's agenda package proved that expansive soils do exist on the property.

In this matter, the Review Board finds that although the local code office did not have the benefit of a geotechnical soil report when determining whether Criqui's property had expansive soils during the permitting process, the December 14, 2016 ECS report in the Review Board's agenda package clearly establishes the presence of expansive soils on Criqui's property. In fact, the handauger borings in the report indicate expansive soil conditions directly beneath the dwelling. The applicable code section, VCC § R403.8.1, states in its entirety:

"Foundation and floor slab for buildings located on expansive soils shall be designed in accordance with Section 1808.6 of the International Building Code."

As a result, the Review Board finds that the local code office, upon learning of the existence of expansive soils below Criqui's home, should have cited Engle for a violation of VCC § R403.8.1 because the original design and construction of the home's footing and foundation did not take into consideration the soil characteristics of the property.

IV. FINAL ORDER

The appeal hearing has been given due regard, and for the reasons set out herein, the Review Board orders the decision of the County building department, and the City appeals board upholding of that decision to be, and hereby is, overturned, with respect to Items #1, #3, and #5, and requires the local code office to issue Notices of Violation to Engle relative to those items. The Review Board also orders the decision of the County building department, and the City appeals board to be, and hereby is, upheld with respect to Items #2, and #4.

_____

Chairman, State Technical Review Board

_____

Date Entered

As provided by Rule 2A:2 of the Supreme Court of Virginia, you have thirty (30) days from the date of service (the date you actually received this decision or the date it was mailed to you, whichever occurred first) within which to appeal this decision by filing a Notice of Appeal with Alan W.McMahan, Secretary of the Review Board. In the event that this decision is served on you by mail, three (3) days are added to that period.

VIRGINIA:

BEFORE THE
VIRGINIA STATE BUILDING CODE
TECHNICAL REVIEW BOARD

IN RE: Appeal of Gregory & Leah Thorpe
Appeal No. 16-11

CONTENTS

Section	Page No.
Review Board Staff Document	29
Basic Documents	35
Combined Documents	59
Documents Submitted by Thorpe at February 17, 2017 Review Board meeting	171
Additional Documents Submitted by Thorpe	181
Additional Documents Submitted by Chesterfield County	443

VIRGINIA:

BEFORE THE
STATE BUILDING CODE TECHNICAL REVIEW BOARD

IN RE: Appeal of Gregory & Leah Thorpe
Appeal No. 16-11

REVIEW BOARD STAFF DOCUMENT

Suggested Statement of Case History and Pertinent Facts

1. In June of 2015, Gregory and Leah Thorpe (Thorpe) purchased a single-family detached home at 16300 Longlands Road in Chesterfield County from Finer Homes, Inc. (Finer Homes), a licensed Class A contractor.

2. In June of 2016, the Chesterfield County Building Inspections Office (local code office), the agency responsible for the enforcement of Part I of the 2012 Virginia Uniform Statewide Building Code (Virginia Construction Code or VCC), conducted an inspection to address Thorpe's concerns about modifications made to the home's roof trusses.

3. As a result of the inspection, the local code office issued a Letter of Defect to Finer Homes to address violations of VCC Sections R303.3 (*Bathrooms)* concerning a hole in a bathroom vent; Section R401.3 (*Drainage)* on the lack of driveway slope; R802.10.4 (*Alteration to trusses)* on trusses altered for the installation of insulation, a window and an HVAC platform; and P2609.2 (*Installation of materials)* on the improper installation of the master bath tub. The letter required compliance within thirty days.

4. In September of 2016, the local code office issued a second Letter of Defect to Finer Homes to address violations of VCC Sections R502.8.2 (*Engineered wood products)*

concerning a notch in the top chord of an engineered floor joist; and N1102.4.1 (*Building thermal envelope)* regarding an unsealed portion of the building envelope. The letter required compliance within sixty days.

5. On the same day in September of 2016, the local code office issued a Notice of Violation to Finer Homes for VCC Sections R401.3 *(Drainage)* for the lack of slope at the home's concrete driveway; R502.6 (*Bearing)* for the lack of minimum bearing of floor joists at the foundation wall; R802.10.4 (*Alteration to trusses)* for roof trusses altered for the installation of a window and an HVAC platform. The notice required compliance within sixty days.

6. Later in September of 2016, the local code office emailed Thorpe to address several issues related to the Notice of Violation. Among other things, the office informed Thorpe: 1.) that the use of a swale beyond ten feet from the building to divert drainage was acceptable, 2.) that no code violation exist regarding an engineer's design on truss alternations, and 3.) that it extended Finer Homes' compliance time for the correction of violations to accommodate Thorpe's schedule.

7. In October of 2016, Thorpe filed an appeal with the Chesterfield County Local Board of Building Code Appeals (local appeals board) which heard the appeal in November of 2016 and ruled to uphold the local code office's decision.

8. Thorpe then filed an application for appeal with the Review Board.

Suggested Issues for Resolution

1. Whether to overturn the local code office's decision that the use of a swale or drain is not prohibited, per VCC Section R401.3 (*Drainage*), from diverting water towards the storm sewer beyond ten feet from the building, and the local appeals board's upholding of that decision.

2. Whether to overturn the local code office's decision that a violation of VCC Section R802.10.4 (*Alteration to trusses*) does not exist concerning the altered roof trusses, and the local appeal board's upholding of that decision.

3. Whether to overturn the local code office's decision that a violation of VCC Section 111.1 (*When required*) does not exist concerning its decision to accept a registered design professional's design on truss alteration, and the local appeals board's upholding of that decisions.

4. Whether to overturn the local code office's decision that a violation of VCC Section 113.6 (*Approval or notice of defective work*) and 115.2 (*Notice of Violation*) does not exist concerning compliance times for the correction of code violations.

Basic Documents

Chesterfield County, Virginia
Department of Building Inspection
9800 Government Center Parkway – P.O. Box 40 – Chesterfield, VA 23832
Phone: (804) 748-1057 – Fax: (804) 751-2249 – Internet: chesterfield.gov/bi

Richard C. Witt
Building Official

Letter of Defect

August 3, 2016

Finer Homes Inc.
P O Box 1090
Chesterfield, VA 23832

THORPE GREGORY H & LEAH B
16300 LONGLANDS RD
CHESTERFIELD, VA 23832

RE: **16300 Longlands Rd Chesterfield, VA 23832**
Code Edition: 2012 Virginia Uniform Statewide Building Code Part I
2012 International Residential Code

Dear Ladies/Gentlemen:

This Letter of Defect is being issued in accordance with the Virginia Uniform Statewide Building Code, Section 115.2 based upon a determination that a code violation exists. You are hereby directed to come into compliance within **thirty (30) days** of the date of this notice by making the necessary repairs and corrections.

Below is a listing of the applicable code section and the specific violations noted:

Code Section: R303.3 Bathrooms. Bathrooms, water closet compartments and other similar rooms shall be provided with aggregate glazing area in windows of not less than 3 square feet, one half of which must be openable.
Exception: The glazing are shall not be required where artificial light and a local exhaust system are provided. The minimum local exhaust rates shall be determined in accordance with Section M1507. Exhaust air from the space shall be exhausted directly to the outdoors.

Specifically: The exhaust duct for the master bath fan has a hole in it, thus not venting to the outdoors.

Code Section: R401.3 Drainage. Surface drainage shall be diverted to a storm sewer conveyance or other approved point of collection that does not create a hazard to the dwelling unit. Lots shall be graded to drain surface water away from foundation walls. The grade shall fall a minimum of 6 inches (152 mm) within the first 10 feet (3048 mm).

Exception: Where lot lines, walls, slopes or other physical barriers prohibit 6 inches (152 mm) of fall within 10 feet (3048 mm), drains or swales shall be constructed to ensure drainage away from the structure. Impervious surfaces within 10 feet (3048 mm) of the building foundation shall be sloped a minimum of 2.0 percent away from the building.

August 3, 2016

Finer Homes Inc.
P O Box 1090
Chesterfield, VA 23832

THORPE GREGORY H & LEAH B
16300 LONGLANDS RD
CHESTERFIELD, VA 23832

Specifically: The concrete driveway has less than 2.0 percent slope from the building foundation.

Code Section: R502.6 Bearing. The ends of each joist, beam or girder shall have not less than 1.5 inches (38 mm) of bearing on wood or metal and not less than 3 inches (76 mm) on masonry or concrete except where supported on a 1-inch by 4-inch (25.4 mm by 102 mm) ribbon strip and nailed to the adjacent stud or by the use of approved joist hangers. The bearing on masonry or concrete shall be direct, or a sill plate of 2-inch-minimum (51 mm) nominal thickness shall be provided under the joist, beam or girder. The sill plate shall provide a minimum nominal bearing area of 48 square inches (30 865 square mm).

Specifically: The foundation wall was removed for the HVAC supply and return lines resulting in improper bearing of the joist and sill plate on the foundation.

Code Section: R802.10.4 Alteration to trusses. Truss members shall not be cut, notched, drilled, spliced or otherwise altered in any way without the approval of a registered *design professional.* Alterations resulting in the addition of load (e.g., HVAC equipment, water heater) that exceeds the design load for the truss shall not be permitted without verification that the truss is capable of supporting such additional loading.

Specifically: The trusses were altered for building up the floor for insulation, installing a window, and building a platform for the HVAC equipment.

Code Section: P2609.2 Installation of materials. All materials used shall be installed in strict accordance with the standards under which the materials are accepted and *approved.* In the absence of such installation procedures, the manufacturer's instructions shall be followed. Where the requirements of referenced standards or manufacturer's instructions do not conform to the minimum provisions of this code, the provisions of this code shall apply.

Specifically: The master bath tub was not installed per the manufacturer's installation instructions. The tub was not properly bedded.

If I can be of any assistance you may contact me at (804) 380-8976 or by email at burcherk@chesterfield.gov to verify compliance.

Sincerely,

Kevin Burcher
Building Inspector

c: Building Official

Chesterfield County, Virginia
Department of Building Inspection
9800 Government Center Parkway – P.O. Box 40 – Chesterfield, VA 23832
Phone: (804) 748-1057 – Fax: (804) 751-2249 – Internet: chesterfield.gov/bi

Richard C. Witt
Building Official

Letter of Defect

September 16, 2016

Finer Homes Inc.
P O Box 1090
Chesterfield, VA 23832

THORPE GREGORY H & LEAH B
16300 LONGLANDS RD
CHESTERFIELD, VA 23832

RE: **16300 Longlands Rd Chesterfield, VA 23832**
Code Edition: 2012 Virginia Uniform Statewide Building Code Part I
2012 International Residential Code

Dear Ladies/Gentlemen:

This Letter of Defect is being issued in accordance with the Virginia Uniform Statewide Building Code, Section 115.2 based upon a determination that a code violation exists. You are hereby directed to come into compliance within **sixty (60) days** of the date of this notice by making the necessary repairs and corrections.

Below is a listing of the applicable code section and the specific violations noted:

Code Section: R502.8.2 Engineered wood products.
Cuts, notches and holes bored in trusses, structural composite lumber, structural glue-laminated members or I-joists are prohibited except where permitted by the manufacturer's recommendations or where the effects of such alterations are specifically considered in the design of the member by a *registered design professional.*

Specifically: The top chord of an engineered floor joist was notched to allow for the installation of the bathtub drain.

Code Section: N1102.4.1 (R402.4.1) Building thermal envelope.
The *building thermal envelope* shall comply with Sections N1102.4.1.1 and N1102.4.1.2. The sealing methods between dissimilar materials shall allow for differential expansion and contraction.

Specifically: The area cut out under the bathtub, for the drain installation needs to be sealed from the unconditioned crawlspace.

September 16, 2016

Finer Homes Inc.
P O Box 1090
Chesterfield, VA 23832

THORPE GREGORY H & LEAH B
16300 LONGLANDS RD
CHESTERFIELD, VA 23832

If I can be of any assistance you may contact me at (804) 814-6992 or by email at kindervaterw@chesterifeld.gov to verify compliance.

Sincerely,

Ed Kindervater
Building Inspector

c: Building Official

Chesterfield County, Virginia
Department of Building Inspection
9800 Government Center Parkway – P.O. Box 40 – Chesterfield, VA 23832
Phone: (804) 748-1057 – Fax: (804) 751-2249 – Internet: chesterfield.gov/bi

Richard C. Witt
Building Official

Notice of Violation

September 16, 2016

Finer Homes Inc.
P O Box 1090
Chesterfield, VA 23832

THORPE GREGORY H & LEAH B
16300 LONGLANDS RD
CHESTERFIELD, VA 23832

RE: **16300 Longlands Rd Chesterfield, VA 23832**
Code Edition: 2012 Virginia Uniform Statewide Building Code Part I
2012 International Residential Code

Dear Ladies/Gentlemen:

This Notice of Violation is being issued in accordance with the Virginia Uniform Statewide Building Code, Section 115.2 based upon a determination that a code violation exists. You are hereby directed to come into compliance within **sixty (60)** days of the date of this notice by making the necessary repairs and corrections.

Below is a listing of the applicable code section and the specific violation noted:

Code Section: R401.3 Drainage. Surface drainage shall be diverted to a storm sewer conveyance or other approved point of collection that does not create a hazard to the dwelling unit. Lots shall be graded to drain surface water away from foundation walls. The grade shall fall a minimum of 6 inches (152 mm) within the first 10 feet (3048 mm).

Exception: Where lot lines, walls, slopes or other physical barriers prohibit 6 inches (152 mm) of fall within 10 feet (3048 mm), drains or swales shall be constructed to ensure drainage away from the structure. Impervious surfaces within 10 feet (3048 mm) of the building foundation shall be sloped a minimum of 2.0 percent away from the building.

Specifically: The concrete driveway has less than 2.0 percent slope from the building foundation.

Code Section: R502.6 Bearing. The ends of each joist, beam or girder shall have not less than 1.5 inches (38 mm) of bearing on wood or metal and not less than 3 inches (76 mm) on masonry or concrete except where supported on a 1-inch by 4-inch (25.4 mm by 102 mm) ribbon strip and nailed to the adjacent stud or by the use of approved joist hangers. The bearing on masonry or concrete shall be direct, or a sill plate of 2-inch-minimum (51 mm) nominal thickness shall

September 15, 2016

Finer Homes Inc.
P O Box 1090
Chesterfield, VA 23832

THORPE GREGORY H & LEAH B
16300 LONGLANDS RD
CHESTERFIELD, VA 23832

be provided under the joist, beam or girder. The sill plate shall provide a minimum nominal bearing area of 48 square inches (30 865 square mm).

Specifically: The foundation wall was removed for the HVAC supply and return lines resulting in improper bearing of the joist and sill plate on the foundation.

Code Section: R802.10.4 Alteration to trusses. Truss members shall not be cut, notched, drilled, spliced or otherwise altered in any way without the approval of a registered *design professional.* Alterations resulting in the addition of load (e.g., HVAC equipment, water heater) that exceeds the design load for the truss shall not be permitted without verification that the truss is capable of supporting such additional loading.

Specifically: The trusses were altered for installing a window, and building a platform for the HVAC equipment.

After the corrections have been made, please contact me at (804) 380-8976 or by email at burcherk@chesterfield.gov to verify compliance.

This Notice of Violation may be appealed in accordance with the Virginia Uniform Statewide Building Code, Part I Section 119.5. The appeal must be submitted in writing within 30 calendar days of the receipt of this notice to the Department of Building Inspection.

Sincerely,

Kevin Burcher
Building Inspector

c: Building Official

DRIVEWAY DRAINAGE
SEE ATTACHMENT #1

Building Official Rick Witt's statement/decision regarding the driveway drainage (excerpt from the 9-30-16 email to the Thorpes):

> **Driveway drainage (outstanding):**
> Per the exception to USBC section R401.3, the driveway slope is required to be 2% away from the building within 10 feet of the building. The driveway is in violation of this provision. The violation is listed on the August 3, 2016 letter of defect and has not been corrected; therefore it is noted on the September 16, 2016 notice of violation. To comply with code the driveway must be sloped 2% away from the building within 10 feet of the building where the driveway abuts the building. The use of a swale beyond 10 feet from the building may be used to divert the drainage towards the street and storm water collection system for the sub-division. The first sentence of the exception allows the use of drains and swales as an alternative to providing the 6 inch in 10 foot (5%) slope if there are lot lines, barriers or slopes that would prevent achieving the slope. The second sentence stands on its own and permits a shallower 2% slope when the surface is impervious. This reduction in slope is allowed because the impervious surface provides less resistance to sheet flow. The 2% impervious allowance applies regardless of the qualifications that limit use of the first sentence. It is correct to state that if you do not have lot lines, barriers or slopes that would prevent achieving the 5% slope you cannot use a swale in place of the slope for the first 10 feet. Use of a swale or drain is not prohibited per R401.3 to divert the water towards the storm sewer system once you get beyond 10 feet from the building. This defect is still outstanding.

2012 Virginia Residential Code section R401.3:

R401.3 Drainage.
Surface drainage shall be diverted to a storm sewer conveyance or other approved point of collection that does not create a hazard to the dwelling unit. Lots shall be graded to drain surface water away from foundation walls. The grade shall fall a minimum of 6 inches (152 mm) within the first 10 feet (3048 mm).

> **Exception:** Where lot lines, walls, slopes or other physical barriers prohibit 6 inches (152 mm) of fall within 10 feet (3048 mm), drains or swales shall be constructed to ensure drainage away from the structure. Impervious surfaces within 10 feet (3048 mm) of the building foundation shall be sloped a minimum of 2.0 percent away from the building.

Chesterfield BI interpretation:

The base requirement in R401.3 is for 6 inch fall for 10 feet adjacent to the structure, or 5% slope.
The exception is two separate exceptions:

1. The first sentence is an exception to both the 6 inch fall and the required fall for 10 feet when there is not enough space adjacent to the structure to achieve either the slope or distance. That sentence allows for use of a drain or swale to provide the intended drainage.

2. The second sentence is a separate exception that applies when there is 10 feet of space adjacent to the structure but the space, or a portion of the space, is covered with an impervious surface. That sentence allows for a reduction from 5% slope to 2% slope for an impervious surface that is less resistive to sheet flow.

BATHTUB DRAIN FLOOR JOIST NOTCH
SEE ATTACHMENT #2

Building Official Rick Witt's statement/decision regarding the floor joist notch (excerpt from the 9-30-16 email to the Thorpes):

> **Bathtub drain floor joist notch (outstanding):**
> The top cord of a floor joist was notched to accommodate a bathtub drain. Per R502.8.2 this notch must be corrected per design documentation submitted from the joist manufacturer or a registered design professional. This defect was cited in September 16, 2016 letter of defect. This defect is still outstanding.

and

2012 Virginia Residential Code section R502.8.2:

R502.8.2 Engineered wood products.
Cuts, notches and holes bored in trusses, structural composite lumber, structural glue-laminated members or I-joists are prohibited except where permitted by the manufacturer's recommendations or where the effects of such *alterations* are specifically considered in the design of the member by a registered *design professional.*

Chesterfield BI interpretation:
The term "notched" is the correct term for use for application of R502.8.2 in this case.

Building Official Rick Witt's statement/decision regarding the truss alteration (excerpt from the 9-30-16 email to the Thorpes):

> **Truss alteration to build up the bottom cord depth (resolved):**
> This issue was cited in the August 3, 2016 letter of defect. This condition is where some trusses were modified "padded" to increase the depth of the truss bottom cords to accommodate insulation. The padding was not installed to repair damage to the truss or increase the truss members load capacity. The Truss was originally designed for limited storage per section R301.6 as detailed in the notes section of the truss design document. Such modifications of an engineered truss do not affect the load bearing capacity of the truss and approval by a registered design professional is not required. Based on your concern Mrs. Thorpe, we did include the condition in our letter of defect. Finer Homes had Virginia licensed engineer James H. Fletcher verify and document that the "padding" of the truss bottom cord was acceptable and we accepted Mr. Fletcher's detail, seal dated June 16, 2016, in accordance with USBC 112.3. I understand that you have received input from other engineers with differing recommendations and opinions. After review of the other opinions that you have provided I have determined that there is no compelling evidence that their opinions have established a code violation or sufficiently called into question the determination of Mr. Fletcher, P.E. We have determined that this issue is not a code violation and it is not referenced in the September 16, 2016 notice of violation.

2012 Virginia Residential Code sections R802.10.4, 111.1 and 112.3:

R802.10.4 Alterations to trusses.
Truss members shall not be cut, notched, drilled, spliced or otherwise altered in any way without the approval of a registered design professional. Alterations resulting in the addition of load (e.g., HVAC equipment, water heater) that exceeds the design load for the truss shall not be permitted without verification that the truss is capable of supporting such additional loading.

Chesterfield BI interpretation:
Nailing a 2x member to a truss that does not alter the load carrying capacity of the truss does not constitute a structural alteration that requires approval of an RDP.

112.3 Documentation and approval.
In determining whether any material, equipment, device, assembly or method of construction complies with this code, the building official shall approve items listed by nationally recognized testing laboratories, when such items are listed for the intended use and application, and in addition, may consider the recommendations of RDPs. Approval shall be issued when the building official finds that the proposed design is satisfactory and complies with the intent of the provisions of this code and that the material, equipment, device, assembly or method of construction offered is, for the purpose intended, at least the equivalent of that prescribed by the code. Such approval is subject to all applicable requirements of this code and the material, equipment, device, assembly or method of construction shall be installed in accordance with the conditions of the approval and their listings. In addition, the building official may revoke such approval whenever it is discovered that such approval was issued in error or on the basis of incorrect information, or where there are repeated violations of the USBC.

111.1 When required.
In accordance with Section 54.1-410 of the Code of Virginia and under the general authority of this code, the local building department shall establish a procedure to ensure that construction documents under Section 109 are prepared by an RDP in any case in which the exemptions contained in Section 54.1-401, 54.1-402 or 54.1-402.1 of the Code of Virginia are not applicable or in any case where the building official determines it necessary. When required under Section 54.1-402 of the Code of Virginia or when required by the building official, or both, construction documents shall bear the name and address of the author and his occupation.

Chesterfield BI interpretation:
Section 112.3 provides the code official authority to consider recommendations of RDPs and provides the code official authority to determine if a proposed design is satisfactory and complies with the intent of the provisions of the code. Section 111.1 only requires the code official ensure documents required to be prepared by an RDP are so prepared. If the plan is sealed by an RDP that is currently licensed by DPOR we have no authority to reject the design because the building element was initially designed by another RDP. We do not have authority to regulate the practice of engineering. The APELSCIDLA Board regulations for engineers are enforced by DPOR.

COMPLIANCE TIMES
SEE ATTACHMENT #4

Building Official Rick Witt's statement/decision regarding compliance times (excerpt from the 9-30-16 email to the Thorpes):

> **Compliance times:**
> The compliance times were increased due to our understanding that you required a several weeks of notice before Finer Homes can come onsite and correct the violations. We would be happy to facilitate a quicker response from Finer Homes based on your availability to allow them onsite.

2012 Virginia Residential Code section 115.1:

115.2 Notice of violation.
The building official shall issue a written notice of violation to the responsible party if any violations of this code or any directives or orders of the building official have not been corrected or complied with in a reasonable time. The notice shall reference the code section upon which the notice is based and direct the discontinuance and abatement of the violation or the compliance with such directive or order. The notice shall be issued by either delivering a copy to the responsible party by mail to the last known address or delivering the notice in person or by leaving it in the possession of any person in charge of the premises, or by posting the notice in a conspicuous place if the person in charge of the premises cannot be found. The notice of violation shall indicate the right of appeal by referencing the appeals section. When the owner of the building or structure, or the permit holder for the construction in question, or the tenants of such building or structure, are not the responsible party to whom the notice of violation is issued, then a copy of the notice shall also be delivered to such owner, permit holder or tenants.

Chesterfield BI interpretation:
The building official has the flexibility to set compliance times. Specific compliance times are not mandated in the code.

October 23, 2016

Chairman Jack R. Wilson
C/O Patricia Kindervater
Chesterfield County Local Board of Building Code Appeals
9800 Government City Parkway
Chesterfield, VA, 23838

To Whom It May Concern:

We are requesting an appeal of the following decisions made by the building official, Mr. Richard Witt, in the attached e-mail that was sent to us on September 30, 2016:

Driveway Drainage:
The code that is sited is USBC section R401.3. We are appealing his decision that according to section R401.3 "the use of a swale or drain is not prohibited per R401.3 to divert water towards the storm sewer system once you get beyond ten feet of the building".

Bathtub drain floor joist notch:
We would like to correct the record on the nature of this violation. The floor joist was not just notched. A 4.5 inch wide span of the joist flange is completely removed.

Truss Alteration to build up bottom chord depth:
We are appealing Mr. Witt's decision that the padding up of the trusses is not a code violation and that the drawing submitted by Finer Homes and stamped by Mr. James H. Fletcher, after the alteration had already been done, is acceptable and in accordance with USBC 112.3. We would also like to have the code violation stated correctly. The padding up of the trusses was not done to accommodate insulation. The trusses that were installed on our home were for a partial attic. In partial attics code allows the insulation to be blown in for the un-floored sections of the attic. We did not request for the entire attic to be floored. We specifically stated that we did not want the trusses to be modified in any way. We did not know the trusses that were installed on our home were for a partial attic until June of 2016. Finer Homes will have to answer the question as to why they padded up the trusses on our home and floored the entire space.

Compliance Times:
We would like to appeal the decision by Mr. Witt to extend the compliance times for Finer Homes "due to our understanding that you required several weeks notice before Finer Homes can come onsite and correct the violations". It is very troubling to us that Mr. Witt would make this determination with no proof from Finer Homes that this statement is accurate and without asking us if it was in fact true.

Sincerely,

Greg & Leah Thorpe

Chesterfield County, Virginia
Local Board of Building Code Appeals

9800 Government Center Parkway – P.O. Box 40 – Chesterfield, VA 23832
Phone: (804) 748-1057 – Fax: (804) 751-2249 – Internet: chesterfield.gov

Jack R. Wilson, III
Chairman

Pat Kindervater
Secretary to Board

DECISION RESOLUTION
November 30, 2016 Hearing
Thorpe Appeal

WHEREAS, the Chesterfield County Local Board of Building Code Appeals (LBBCA) is duly appointed by the Chesterfield County Board of Supervisors to resolve disputes arising from enforcement of the Uniform Statewide Building Code (USBC), Statewide Fire Prevention Code (SFPC) and the Virginia Amusement Device Regulations (VADR); and

WHEREAS, an appeal via letter dated October 23, 2016 was filed with the LBBCA by Greg and Leah Thorpe regarding decisions of the building official documented in an email from Building Official Richard C. Witt dated September 30, 2016 regarding the single family dwelling owned by Greg and Leah Thorpe located at 16300 Longlands Road Chesterfield, VA; and

WHEREAS, a hearing was held before the LBBCA on November 30, 2016 to consider the appeal; and,

WHEREAS, the LBBCA has fully deliberated this matter and rendered decisions by concurring vote of a majority of the LBBCA members present; now; therefore, be it

RESOLVED, by the LBBCA, that in the matter of the Thorpe appeals case, pursuant to USBC section 119.7, the decisions of the code official documented in the September 30, 2016 email from Mr. Witt to Mr. and Mrs. Thorpe have been adjudicated as follows:

> The building official's decision that the required slope of the driveway required per USBC section R401.3 can end 10 feet from the building and that the USBC does not prohibit a swale in the driveway that diverts the runoff towards the storm water collection system in the street is UPHELD;
>
> The building official's decision to describe the cut-out portion of the I-joist at the bathtub floor drain as a "notch" regulated per USBC section R502.8.2 is UPHELD;
>
> The building official's decision that the attachment of a 2"x6" segment of lumber to the top of the bottom chord of a number of roof trusses is not a code violation per R802.10.4 and his decision per USBC 111.1 to accept the engineered detail prepared and sealed by James H. Fletcher P.E. for the attachment of the 2"x6" segments of lumber to the top of the bottom truss chords are UPHELD;
>
> The building official's decisions establishing the compliance times in the August 3, 2016 letter of defect to Finer Homes, the September 16, 2016 letter of defect to Finer Homes, and the September 16, 2016 notice of violation to Finer Homes per USBC sections 113.6 and 115.2 are UPHELD;

AND, BE IT FURTHER RESOLVED that any person who was party to the appeal may appeal to the State Review Board by submitting an application to such board within 21 calendar days upon receipt by certified mail of this resolution. Application forms are available from the Office of the State Review Board, 600 East Main Street, Richmond, Virginia 23219, (804) 371-7150.

Jack R. Wilson, III
Chairman of Chesterfield Board of Appeals

December 7, 2016
Date

Chesterfield County, Virginia
Local Board of Building Code Appeals

9800 Government Center Parkway – P.O. Box 40 – Chesterfield, VA 23832
Phone: (804) 748-1057 – Fax: (804) 751-2249 – Internet: chesterfield.gov

Jack R. Wilson, III
Chairman

Pat Kindervater
Secretary to Board

HEARING MINUTES
November 30, 2016

A request for an appeal hearing was submitted by property owners Greg and Leah Thorpe in a letter dated October 23, 2016 (attached). The appeal case concerns decisions of the building official with regards to construction defects at the Thorpe's residence at 16300 Longlands Road, Chesterfield, VA 23832.

Mr. Jack Wilson, Chairman, called the hearing to order at 5:55 p.m. in the Multi-purpose room of the Community Development Building with the following board members present:

Michael Bricker
Stephen H. Conner
R. Christian Eudailey
James Ingle
James Kester
Jack R. Wilson, III

Secretary to the Board Pat Kindervater and her assistant Erin White were also present.

The following county representatives were present:

Richard C. Witt, Director of Building Inspection
Ronald W. Clements, Jr., Assistant Director of Building Inspection
Chris Davis, Chief of Residential Inspections
Tara McGee, Senior Assistant County Attorney

The appellants, Greg and Leah Thorpe, were present.

The home builder, Greg Holt with Finer Homes was also present.

Chairman Wilson instructed the appellant on the appeal process.

Mr. and Mrs. Thorpe presented their case and explained in detail their objection to decisions Building Official Rick Witt had rendered with regards to: driveway drainage, a floor joist cut-out to accommodate a bathtub drain pipe, alteration of roof trusses, compliance times granted to the builder. Mrs. Thorpe showed a slide on the truss issue and provided various exhibits to the board members.

Assistant Building Official Ron Clements presented the case for the Building Inspection department. He presented an exhibit supported by three slides and explained the county's position on each appealed decision. Additionally, Building Official Rick Witt spoke to the appeal of the compliance times provided, stating that we always work towards code compliance and try to give individuals time to make necessary repairs.

The appeal request letter and all exhibits are available in the LBBCA Thorpe appeal case record maintained by the secretary to the LBBCA.

The LBBCA discussed each of the four items addressed in the appeal (driveway drainage, a floor joist cut-out to accommodate a bathtub drain pipe, alteration of roof trusses, compliance times granted to the builder). During the LBBCA deliberations some questions were asked of the appellant and county representatives.

The LBBCA concluded deliberations.

Chairman Wilson called for an individual motion on each of the four items listed in the Thorpe's letter of appeal.

The motions were made, seconded and dispensed as follows:

- **Driveway Drainage-** Motion to deny appeal (uphold the building official's decision) Motion passed 5 yeas, 0 nays, chair did not vote
- **Floor joist cut-out for a bathtub drain pipe-** Motion to deny appeal (uphold the building official's decision) Motion passed 5 yeas, 0 nays, chair did not vote
- **Truss alteration to build up bottom chord depth-** Motion to deny appeal (uphold the building official's decision) Motion passed 4 yeas, 1 nay, chair did not vote, Eudailey dissenting vote.
- **Compliance times-** Motion to deny appeal (uphold the building official's decision) Motion passed 5 yeas, 0 nays, chair did not vote

The hearing was adjourned at 8:05 p.m.

COMMONWEALTH OF VIRGINIA
DEPARTMENT OF HOUSING AND COMMUNITY DEVELOPMENT
State Building Codes Office and Office of the State Technical Review Board
Main Street Centre, 600 E. Main Street, Suite 300, Richmond, Virginia 23219
Tel: (804) 371-7150, Fax: (804) 371-7092, Email: alan.mcmahan@dhcd.virginia.gov

APPLICATION FOR ADMINISTRATATIVE APPEAL

Regulation Serving as Basis of Appeal (check one):

☒ Uniform Statewide Building Code

☐ Statewide Fire Prevention Code

☐ Industrialized Building Safety Regulations

☐ Amusement Device Regulations

Appealing Party Information (name, address, telephone number and email address):

Gregory & Leah Thorpe
16300 Longlands Road
Chesterfield, VA 23832
804-218-8493
leahbthorpe@gmail.com

Opposing Party Information (name, address, telephone number and email address of all other parties):

Richard C. Witt, Chesterfield County Building Official
9800 Government Center Parkway
P.O. Box 40
Chesterfield, VA 23832
804-748-1057
wittr@chesterfield.gov

Finer Homes - Greg Holt
10301 Memory Lane
P.O. Box 1090
Chesterfield, VA 23832
804-748-7771
gholt@finerhomesinc.net

Additional Information (to be submitted with this application)

- Copy of enforcement decision being appealed
- Copy of record and decision of local government appeals board (if applicable and available)
- Statement of specific relief sought

CERTIFICATE OF SERVICE

I hereby certify that on the2nd day of January , 2017, a completed copy of this application, including the additional information required above, was either mailed, hand delivered, emailed or sent by facsimile to the Office of the State Technical Review Board and to all opposing parties listed.

Note: This application must be received by the Office of the State Technical Review Board within five (5) working days of the date on the above certificate of service for that date to be considered as the filing date of the appeal. If not received within five (5) working days, the date this application is actually received by the Office of the Review Board will be considered to be the filing date.

Signature of Applicant: Gregory H Thorpe Leah J Thorpe

Name of Applicant: Gregory Thorpe , Leah Thorpe
(please print or type)

STATEMENT OF RELIEF SOUGHT

Driveway Drainage:
The builder has replaced one section of the driveway to try to alleviate the problem of water getting into the garage. The slope does not meet the code standard but we agreed that if it alleviated the problem we would be satisfied. The builder has also agreed that if it does not alleviate the problem then he will replace the entire driveway if he has to. We would like to have the State's interpretation of this code as we feel that the County is wrong when they say "the builder can do whatever he/she wants beyond 10 feet from the building." It is not reasonable to interpret the code in this way when we do not have any lot lines, walls, slopes, or other physical barriers that inhibited the slope of our driveway to have a consistent slope away from the house towards the street. We would like the State to rule on this so that in the event that the builder does not honor the informal agreement that we have we will have the states ruling on the proper interpretation of the code.

Truss Alteration to build up bottom chord:
We are appealing the Building Officials interpretation that "nailing a 2 x 6 member to a truss that does not alter the load carrying capacity of the truss does not constitute a structural alteration that requires approval of an RDP." That statement directly contradicts the first sentence of the code; *Truss members shall not be cut, notched, drilled, spliced* ***or altered in any way*** *without the approval of a registered design professional*. We agree that the code official has the authority to determine if a proposed design is satisfactory and complies with the intent of the provisions of the code. We disagree that all the building official has to do to determine if the proposed design is satisfactory and complies with the intent of the provisions of the code is have a drawing stamped by any RDP in his possession. When I e-mailed the state office concerning this issue in June of 2016 I was told that the method of construction in this case was not prescriptive but must meet a performance standard. In our case the building official was presented opinions from the engineer who designed and stamped the original truss drawings and an engineer that we hired to inspect the padded up trusses. Both of these engineers said that the padded up trusses did not meet the performance standard. The stamped drawing that the builder gave the building official is from an engineer who cannot be contacted, shows no calculations as to how he determined that the alteration would meet the performance standard. This engineer is also currently under investigation by DPOR for violating DPOR regulations. From these three engineers, the building official chose to accept the drawing stamped by James Fletcher that was given to him by the builder. Upon further investigation we have found that according to Virginia Residential Code Section R802.10.2 Wood trusses shall be designed in accordance with accepted engineering practice. The design and manufacture of metal-plate-connected wood trusses shall comply with ANSI/TPI 1. The truss design drawings shall be prepared by a registered professional. The attached documents from MiTek and ITWBCG would indicate that the trusses that were padded up and floored by the builder should not have been because they have a different web configuration than the trusses with the 2 x 12 bottom chord. We would like the State to look at the truss drawings and determine if the section of the attic with the floored, padded up trusses and used for

storage passes code based on the ANSI/TPI standards and the determine if the drawing stamped by James Flectcher is acceptable according to code.

Compliance Times:

We would like the State to rule as to whether or not the building official has the flexibility to set compliance times. Based on the 1995 Circuit Court decision in Chesterfield County v. Karnos (attached) it seems that allowing the building official to change compliance times at will would be allowing them to pursue building code violations in its own informal way.

We would also like to add that we found 24 code violations on our home that both the county and the builder missed. Five of these violations were structural and required drawings from a Structural Engineer.

Chesterfield County, Virginia
Department of Building Inspection
9800 Government Center Parkway – P.O. Box 40 – Chesterfield, VA 23832
Phone: (804) 748-1057 – Fax: (804) 751-2249 – Internet: chesterfield.gov

Richard C. Witt
Building Official

Appeal No. 16-11
Chesterfield County Responses to Relief Sought issues:

17 January 2017

DRIVEWAY DRAINAGE:

Relief Sought:

As we understand the relief sought statement from the Thorpes they contend that USBC section R401.3 provides a requirement for providing a "consistent slope" away from a house beyond the 10' distance from the house prescribed in section R401.3.

Chesterfield BI Position:

The relief sought is not supported by the code text of R401.3. There is no requirement in the USBC to provide a driveway, or to maintain a consistent slope of a driveway if one is provided. Once the slope of the surface grade, including driveways, adjacent to the house is provided with the prescribed fall for a distance 10' from the structure, a swale or other surface feature can be installed to divert water to an approved point of collection not creating a hazard to the foundation.

TRUSS ALTERATION TO BUILD UP BOTTOM CORD DEPTH

Relief Sought:

As we understand the relief sought statement from the Thorpes they contend that USBC section R802.10.4 requires any alteration of the truss to be designed by an engineer; additionally, they question if the engineer stamped design from James Fletcher, P.E. (DPOR license Number 0402026629, expiration 1-31-2018) is acceptable.

Chesterfield BI Position:
The use of the term "altered" in USBC section R802.10.4 is intended to address alterations of a truss that adversely affect the structural capacity of the truss. The padding was not installed to repair damage to the truss or increase the truss load capacity. The Truss was originally designed for limited storage per section R301.6 as detailed in the notes section of the truss design document. Nailing a 2x member to a truss that does not alter the load carrying capacity of the truss does not constitute a structural alteration that requires approval of an RDP. It could be further argued that R802.10.4 is not a valid provision of code. Per USBC 101.6, provisions of code are superseded by provisions of chapter 1 that address the same subject matter. Determination of when an RDP must design a structural member is prescribed by USBC sections 109, 111, 112.3 and COV title 54.1.

We do not require an engineered design for truss padding installed for the purpose of raising the attic floor level; however, based on the concerns raised by the Thorpes, we did request and receive a design for this case. That is the design from James Fletcher, P.E. dated June 16, 2016.

Section 111.1 requires the code official ensure documents required to be prepared by an RDP are so prepared. James Fletcher, P.E is currently licensed by DPOR as verified by the DPOR license lookup service. There is no basis in the USBC to reject the design prepared by Mr. Fletcher.

COMPLIANCE TIMES

Relief Sought:

Rule that the building official does not have authority to set compliance times.

Chesterfield BI Position:
The building official has the flexibility to set compliance times. Specific compliance times for correcting code violations are not mandated in the code. USBC Section 115.2 *Notice of violation* does not address compliance times. USBC Section 115.3 *Further action when violation not corrected* does not stipulate the timeframe required before the building official must seek legal action from the legal counsel of the locality. The timeframes are at the discretion of the building official.

Combined Documents

Leah Thorpe <leah_thorpe@ccpsnet.net>

Thorpe Trusses

1 message

Leah Thorpe <leah_thorpe@ccpsnet.net> Wed, Jun 1, 2016 at 11:52 AM
To: flassiter@mii.com

Mr. Lassiter:

Thank you for taking the time to talk to me. Attached is the paperwork given to us by the customer service rep. and pictures of the modifications to the trusses. My home email is leahbthorpe@gmail.com and my cell phone number is 804-218-8493. I can be reached at 804-378-2480 ext 227 until 3:00 p.m. on weekdays. Thank you again!

Leah Thorpe
Bookkeeper
Monacan High School
11501 Smoketree Drive
N. Chesterfield, VA 23236
804-378-2480 ext. 227

2 attachments

TRUSS MODIFICATION 4-23-15 1.jpg
1756K

THORPE TRUSSES.pdf
2371K

CCPS POWERED BY Google

Leah Thorpe <leah_thorpe@ccpsnet.net>

Truss Configuration

1 message

Leah Thorpe <leah_thorpe@ccpsnet.net> Wed, Jun 1, 2016 at 11:57 AM
To: flassiter@mii.com

Mr. Lassiter:

I have attached 2 more documents showing how the trusses are configured on our house. Thank you.

Leah Thorpe
Bookkeeper
Monacan High School
11501 Smoketree Drive
N. Chesterfield, VA 23236
804-378-2480

2 attachments

our attic 4-18-15.jpg
1869K

truss configuration.pdf
44K

Leah Thorpe <leah_thorpe@ccpsnet.net>

RE: Thorpe Trusses

1 message

Frank Lassiter <flassiter@mii.com>
To: Leah Thorpe <leah_thorpe@ccpsnet.net>

Thu, Jun 2, 2016 at 11:24 AM

I am getting ready to head out of town for the week.

Go ahead and tell Structural Technologies you need a repair drawing for the padding and for the HVAC.

If you don't get any thing back from them let me know next week.

Gmail

Leah Thorpe <leahbthorpe@gmail.com>

Trusses

5 messages

Leah Thorpe <leahbthorpe@gmail.com> Fri, Jun 3, 2016 at 11:05 AM
To: asimmons@struc-tech.com
Cc: Greg Thorpe <ghthorpe@yahoo.com>

Mr. Simmons:

I spoke with Frank Lassiter on Wednesday morning about the padding of the bottom chord and the HVAC platform and he was nice enough to take the time to look at the paperwork that Nick had given us (with his seal on it), and pictures of the modifications.

He e-mailed me back on Thursday and said "Go ahead and tell Structural Technologies that you need a repair drawing for the padding and the HVAC". He was very nice and helpful and even said that I could contact him next week when he was back in town if I needed to. We will look forward to hearing from you.

Greg and Leah Thorpe

Allan Simmons <ASimmons@struc-tech.com> Fri, Jun 3, 2016 at 3:27 PM
To: Leah Thorpe <leahbthorpe@gmail.com>
Cc: Greg Thorpe <ghthorpe@yahoo.com>

Please send me your pictures of the pad up condition.

Thanks,

Allan Simmons

V.P. Sales and Marketing

Structural Technologies

17320 Washington Hwy

Doswell, VA 23047

Cell: (804) 640-3814

Fax: (804) 876-3016

E-Mail: ASimmons@struc-tech.com

www.struc-tech.com

E-Mail: ASimmons@struc-tech.com

www.struc-tech.com

From: Leah Thorpe [mailto:leahbthorpe@gmail.com]
Sent: Friday, June 03, 2016 11:06 AM
To: Allan Simmons <ASimmons@Struc-tech.com>
Cc: Greg Thorpe <ghthorpe@yahoo.com>
Subject: Trusses

[Quoted text hidden]

Leah Thorpe <leahbthorpe@gmail.com> Fri, Jun 3, 2016 at 4:54 PM
To: Allan Simmons <ASimmons@struc-tech.com>

I have attached the pictures you requested. Thanks and have a good weekend.

Leah Thorpe
[Quoted text hidden]

3 attachments

TRUSS MODIFICATION.jpg
1701K

TRUSS MODIFICATIONS.jpg
1756K

truss over kitchen.jpg
1779K

Gmail

Leah Thorpe <leahbthorpe@gmail.com>

Repair Drawings

9 messages

Leah Thorpe <leahbthorpe@gmail.com> Tue, Jun 7, 2016 at 11:48 AM
To: asimmons@struc-tech.com
Cc: Greg Thorpe <ghthorpe@yahoo.com>

Mr. Simmons:

Could you please e-mail me a copy of the repair drawings for the padding up of the bottom chord and the HVAC platform when they are complete. We have hired a structural engineer to do a home inspection and we would like him to look at the drawings. Thank you.

Leah Thorpe

Allan Simmons <ASimmons@struc-tech.com> Tue, Jun 7, 2016 at 11:47 AM
To: Leah Thorpe <leahbthorpe@gmail.com>
Cc: Greg Thorpe <ghthorpe@yahoo.com>

I can, I have not received anything yet.

Allan Simmons

V.P. Sales and Marketing

Structural Technologies

17320 Washington Hwy

Doswell, VA 23047

Cell: (804) 640-3814

Fax: (804) 876-3016

E-Mail: ASimmons@struc-tech.com

www.struc-tech.com

From: Leah Thorpe [mailto:leahbthorpe@gmail.com]
Sent: Tuesday, June 07, 2016 11:48 AM
To: Allan Simmons <ASimmons@Struc-tech.com>

Cc: Greg Thorpe <ghthorpe@yahoo.com>
Subject: Repair Drawings

Mr. Simmons:

Could you please e-mail me a copy of the repair drawings for the padding up of the bottom chord and the HVAC platform when they are complete. We have hired a structural engineer to do a home inspection and we would like him to look at the drawings. Thank you.

Leah Thorpe

Leah Thorpe <leahbthorpe@gmail.com> Tue, Jun 7, 2016 at 3:41 PM
To: Allan Simmons <ASimmons@struc-tech.com>

Thank you. Who is preparing the drawings?

[Quoted text hidden]

Allan Simmons <ASimmons@struc-tech.com> Tue, Jun 7, 2016 at 3:47 PM
To: Leah Thorpe <leahbthorpe@gmail.com>

mitek

Allan Simmons

V.P. Sales and Marketing

Structural Technologies

17320 Washington Hwy

Doswell, VA 23047

Cell: (804) 640-3814

Fax: (804) 876-3016

E-Mail: ASimmons@struc-tech.com

www.struc-tech.com

From: Leah Thorpe [mailto:leahbthorpe@gmail.com]
Sent: Tuesday, June 07, 2016 3:41 PM
To: Allan Simmons <ASimmons@Struc-tech.com>
Subject: RE: Repair Drawings

Plan stamping

Dear Valued MiTek Customer,

There have been numerous discussions recently about how to accurately describe the process through which a component manufacturer ("CM") receives truss designs sealed by professional engineers at MiTek.

This topic is extremely important because an innocent but inaccurate description of the process might lead to an unfounded charge against your company that it is engaged in the unlawful practice of engineering, or against one of MiTek's engineers that he/she is engaged in the illegal practice of "plan stamping," i.e., the sealing by a professional engineer of design work which has neither been prepared by the engineer nor by a person working under the engineer's responsible charge.

Here is my attempt at an accurate description of the process:

As you know, most ***MiTek*** plate customers have licensed ***MiTek*** software installed on their business computers into which they can input design parameters and internally generate preliminary truss designs. These preliminary designs are important for preparing meaningful truss quotes, for inventory analysis and other purposes.

In some states, for certain types of structures, a preliminary design prepared by the CM without professional engineer involvement may be all that is required for the building/approval process. This is a question of applicable law, building regulation and inspector discretion.

In other cases, however, a truss design bearing the professional seal of a professional engineer licensed in the applicable jurisdiction may be required. Unless the CM employs an engineer, the CM will often request such a sealed design from MiTek. It is at this step in the process where the need for accurate description becomes particularly critical.

In making a request to MiTek for a sealed truss design, the CM could simply call, fax or mail a request containing the appropriate design parameters to be used. More typically, however, the CM will first retrieve from storage on his computer an electronic date file constituting a preliminary design the CM has previously run as well as all design parameters input by the CM to generate such design. The CM will then use a "Send" program to electronically transmit over the internet a detailed request for a sealed truss design to MiTek. **Understanding how this Send program works is critical to a proper understanding and description of the process.**

HVAC REPAIR DRAWING.pdf
133K

MITEK BOTTOM CHORD REPAIR DRAWING.pdf
43K

Leah Thorpe <leahbthorpe@gmail.com> Tue, Jun 21, 2016 at 3:54 PM
To: Nick Woodard <nwoodard@finerhomesinc.net>

[Quoted text hidden]

---

3 attachments

ORIGINAL TRUSS DRAWINGS.pdf
2362K

HVAC REPAIR DRAWING.pdf
133K

MITEK BOTTOM CHORD REPAIR DRAWING.pdf
43K

Nick Woodard <nwoodard@finerhomesinc.net> Tue, Jun 21, 2016 at 4:34 PM
To: Leah Thorpe <leahbthorpe@gmail.com>

Mr fletcher is a professional engineer for fletcher associates. The issue you have with the way the trusses are padded is not a truss issue it is an attachment issue. Miatek deals with trusses, not how they are installed. The document you've attached is a recommendation on how to pad up trusses. There are more than one way of doing this. As illustrated in the in the stamped drawing provided by mr fletcher (structural engineer) as requested.

Nick Woodard
Customer Service Supervisor
804-920-1966
Finer Homes Inc.

> On Jun 21, 2016, at 3:54 PM, "Leah Thorpe" <leahbthorpe@gmail.com> wrote:
>
>
> ——— Forwarded message ———
> From: Leah Thorpe <leahbthorpe@gmail.com<mailto:leahbthorpe@gmail.com>>
> Date: Tue, Jun 21, 2016 at 3:52 PM
> Subject: Re: Drawings
> To: Leah Thorpe <Leah_Thorpe@ccpsnet.net<mailto:Leah_Thorpe@ccpsnet.net>>
> Cc: Allan Simmons <asimmons@struc-tech.com<mailto:asimmons@struc-tech.com>>, gholt@finerhomesinc.net<mailto:gholt@finerhomesinc.net>, "Kindervater, William" <kindervaterw@chesterfield.gov<mailto:kindervaterw@chesterfield.gov>>, flassiter@mii.com<mailto:flassiter@mii.com>
>
>
> Nick:
>
> What company does this engineer work for? Why would this repair drawing be done by a different engineer and company than the original truss drawings (attached) that you gave us, and the repair drawing for the HVAC unit (attached)? Also, Mr. Simmons said in his e-mail to me that Mitek was doing the repair drawings. I have attached a Mitek bottom chord repair drawing that is online. The drawing that Mr. Fletcher did does not look anything like this.

Compliance Times

Subject: Concrete

From: Nick Woodard (nwoodard@finerhomesinc.net)

To: leahbthorpe@gmail.com; ghthorpe@yahoo.com;

Date: Friday, August 26, 2016 2:17 PM

We have spoken to mr kindervater and Garlitz and both are available to meet Monday at 11am at your house to inspect the driveway. Just want to make sure you guys are okay with us taking a look Monday.

Nick Woodard
Customer Service Supervisor
804-920-1966
Finer Homes Inc.

Subject: Re: Concrete

From: Leah Thorpe (leahbthorpe@gmail.com)

To: nwoodard@finerhomesinc.net;

Cc: ghthorpe@yahoo.com;

Date: Saturday, August 27, 2016 11:58 AM

Nick

Monday will not work for Greg and I. Please try to schedule any sub contractors coming in either first thing in the morning or on a Friday.

What exactly do Bob Garlitz and Mr Kindervater want to look at? Both of them have been to our house at least 2 times and seen the problem. Mr. Kindervater also has several pictures of the drainage problem on the driveway and told me himself that the driveway did not meet code because it did not have a 2% slope away from the house.

Also, just as a reminder, Greg and I do not give our permission for Finer Homes or anyone working for Finer Homes or any building inspectors to be on our property without our permission and making an appointment.

Leah Thorpe

Gmail

Leah Thorpe <leahbthorpe@gmail.com>

Concrete

Nick Woodard <nwoodard@finerhomesinc.net> Sat, Aug 27, 2016 at 12:04 PM
To: Leah Thorpe <leahbthorpe@gmail.com>

Mr kindervater wants to look at it with Garlitz and finer to discuss the issues and resolve.

Monday at 11 is when he and Garlitz are available. So you do not want us to look at this Monday?

Nick Woodard
Customer Service Supervisor
304-920-1966
Finer Homes Inc.
[Quoted text hidden]

Gmail

Leah Thorpe <leahbthorpe@gmail.com>

Concrete

Leah Thorpe <leahbthorpe@gmail.com>
To: Nick Woodard <nwoodard@finerhomesinc.net>

Sat, Aug 27, 2016 at 4:19 PM

We do want you to look at it but we can not be home Monday at 11:00. Can Mr Garlitz and Mr Kindervater meet on Friday or early in the morning on any other day. We did not get your email until Friday afternoon which did not give us enough time to rearrange our schedule.

Leah Thorpe

[Quoted text hidden]

Gmail

Leah Thorpe <leahbthorpe@gmail.com>

Concrete

Leah Thorpe <leahbthorpe@gmail.com> Sun, Aug 28, 2016 at 12:19 PM
To: Nick Woodard <nwoodard@finerhomesinc.net>
Cc: gholt@finerhomesinc.net, "Kindervater, William" <kindervaterw@chesterfield.gov>

Nick:

Greg has gone in to work today so that he can be here tomorrow at 11:00. Please be on time to minimize the hours that Greg will be away from the office.

I would also like to clarify why we do not want Finer Homes or anyone that is working for or with Finer Homes on our property without us being present.

1. When the plumber came last week to fix the gas leak and we were not at home it did not give us the opportunity to see exactly what he did. He told Greg that there was no gas leak, but on August 19th Columbia Gas was here and showed Greg that there was a gas leak. We have documentation Commonwealth Plumbing did not make an appointment, have Greg accompany him to the gas hook up, and test for a leak in front of him. So now all we know is what Commonwealth Plumbing told Greg, and what Columbia Gas showed him. When a sub contractor is working on anything on our house we want to see exactly what they are doing and how they are doing it.

2. When the sub floor was being replaced and one on the workman went through Greg's tools without asking permission you had a very nonchalant attitude about it. In fact you told Greg "he was just looking for a knife" as if to say that it was perfectly okay for him to go through our personal possessions. As you know, after everyone left Greg did discover that his utility knife was missing. We don't feel comfortable having someone who obviously has no regard for our home or personal possessions on our property without us being present.

Gmail

Leah Thorpe <leahbthorpe@gmail.com>

Concrete

Leah Thorpe <leahbthorpe@gmail.com> Sun, Aug 28, 2016 at 12:32 PM
To: Nick Woodard <nwoodard@finerhomesinc.net>
Cc: gholt@finerhomesinc.net, "Kindervater, William" <kindervaterw@chesterfield.gov>, Greg Thorpe <ghthorpe@yahoo.com>

Nick:

I accidentally sent the email you just received before I was finished.

3. In our contract with Finer Homes we are required to give any sub contractor that we call to come to our home a two week time span to fit us in to their schedule and if we have to cancel that appointment we have to give them 24 hours notice. It seems only fair that Finer Homes should have to abide by the requirements that they impose on the homeowner.

We do not feel that expecting Finer Homes to give us sufficient notice of appointment times unreasonable. We have been more than accommodating during this past year in the scheduling process. We are bending over backwards to accommodate Finer Homes when it should be the other way around.

We will be expecting to see you, Mr. Kindervator and Mr. Garlitz at our house tomorrow at 11:00 a.m. Please e-mail Greg and I if you can not keep this appointment.

Leah Thorpe
[Quoted text hidden]

Gmail

Leah Thorpe <leahbthorpe@gmail.com>

Concrete

Nick Woodard <nwoodard@finerhomesinc.net> Sun, Aug 28, 2016 at 2:28 PM
To: Leah Thorpe <leahbthorpe@gmail.com>

I left a message with everyone canceling tomorrow's appointment after your last email. I left a message again today to try and get it back on the schedule. Hopefully everyone is enjoying there weekend and didn't get yesterday's message and will get both messages at the same time.

I gave the plumbers all your contact info to schedule as I do everyone else. The heard it was a gas leak and came right over as the consider something like that an emergency that needs fixed pronto. That's why they just showed up. You have a contact list for the contractors. Certainly things like a gas leak you should call them directly to get resolve as soon as possible.

You will probably want to get Columbia gas to meet them out there and show them the leak, the plumbers could not find anything leaking anywhere. I'm shocked that someone from the gas company would find a leak and not turn the gas off at the meter and put a lock on it. I've never seen them find a leak and tell a homeowner just to get it fixed. Definitely will want to have them show the plumber where there is a leak.

Nick Woodard
Customer Service Supervisor
804-920-1966
Finer Homes Inc.

On Aug 28, 2016, at 12:19 PM, "Leah Thorpe" <leahbthorpe@gmail.com> wrote:

Gmail

Leah Thorpe <leahbthorpe@gmail.com>

Concrete

Leah Thorpe <leahbthorpe@gmail.com> Sun, Aug 28, 2016 at 3:15 PM
To: Nick Woodard <nwoodard@finerhomesinc.net>
Cc: Greg Thorpe <ghthorpe@yahoo.com>, gholt@finerhomesinc.net, "Kindervater, William" <kindervaterw@chesterfield.gov>

Nick:

I just spoke to Bob Garlitz and he is on vacation next week and had no idea what I was talking about when I asked him if tomorrow at 11:00 a.m. was still convenient for him. He said that maybe Jeff Coates was the one who was coming out. The number I have for Jeff Coates - 804-640-8056 is not working so if you could provide me with a working number I will call him to verify that he can be here. I left a message with Mr. Kindervator and will also call him first thing in the morning to verify the 11:00 a.m. appointment.

Greg will be here at 11:00 a.m. tomorrow morning.

Leah Thorpe
[Quoted text hidden]

Gmail

Leah Thorpe <leahbthorpe@gmail.com>

Concrete

Nick Woodard <nwoodard@finerhomesinc.net> Sun, Aug 28, 2016 at 3:51 PM
To: Leah Thorpe <leahbthorpe@gmail.com>

Yes Jeff is the one meeting.
(804) 640-8055 is what I have for Jeff.

Nick Woodard
Customer Service Supervisor
804-920-1966
Finer Homes Inc.
[Quoted text hidden]

Gmail

Leah Thorpe <leahbthorpe@gmail.com>

Concrete

Leah Thorpe <leahbthorpe@gmail.com> Sun, Aug 28, 2016 at 3:56 PM
To: Nick Woodard <nwoodard@finerhomesinc.net>
Cc: Greg Thorpe <ghthorpe@yahoo.com>, gholt@finerhomesinc.net, "Kindervater, William" <kindervaterw@chesterfield.gov>

Nick:

I just called and left a message on his cell phone that Greg would be here at 11:00 tomorrow morning and if he could not make it to please call Greg.

Leah Thorpe
[Quoted text hidden]

Subject: Front door

From: Greg Thorpe (ghthorpe@yahoo.com)

To: gholt@finerhomesinc.net;

Date: Tuesday, November 22, 2016 1:54 PM As of 11-29-16- no reply

Greg:

I wanted to touch base with you about replacing the front door. In one e-mail that we received from Nick he said that Finer was going to replace the door slab and on the next e-mail he said that Finer was not going to replace it. You indicated at our meeting on 11/14/16 that you were going to take care of it. If that is accurate could you please let us know where we need to go to select the door we want.

I know we were talking about just replacing the slab earlier, but I feel since it was originally installed incorrectly and I would be the one having to rip it out to re plumb, it would be best to just replace the whole unit as a unit. The existing slab is pulled away from the frame at the top corner and you can see light coming through. I thinking it is more of a frame issue than a slab issue.

We should have looked at it together yesterday, but it completely slipped my mind.

I would like to stain the door myself so all Finer would have to do is install it.

Thank you.

Greg Thorpe

SYSTEMATIC
ENGINEERING LLC

16300 Longlands Road

Visual Inspection

Jesse Wastler, P.E.

6/22/2016

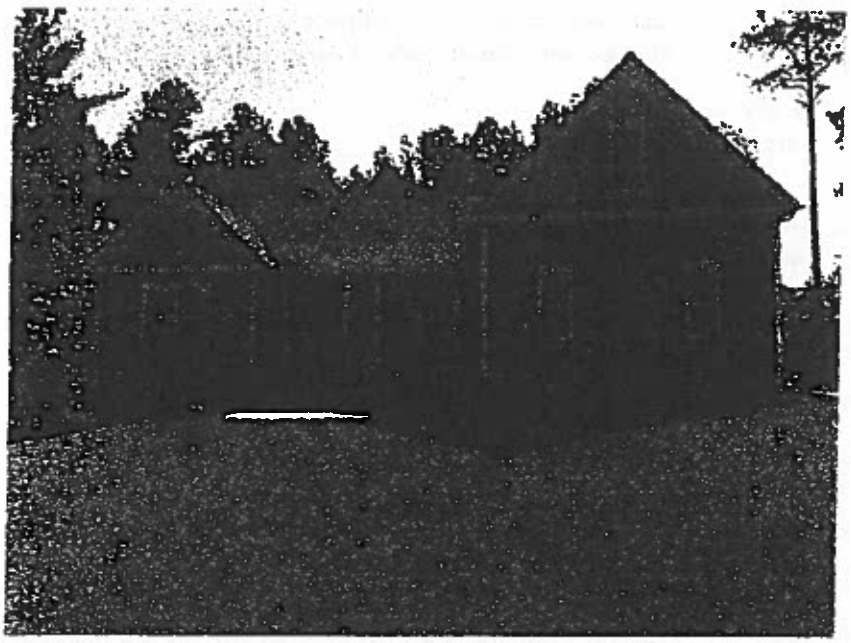

This report represents the results of a visual structural inspection performed at 16300 Longlands Road, Chesterfield, VA 23832 on Friday, June 10th, 2016.

Systematic Engineering LLC

Leah Thorpe

Mrs. Thorpe:

Systematic Engineering (SE) performed a visual inspection at 16300 Longlands Road, Chesterfield, VA 23832 of the home's attic to determine if the physical deficiencies of concern affect the structural integrity of the structure. As a result, a brief letter report has been prepared summarizing the Background, Type of Inspection, Inspection Findings, Analysis of Inspection Findings and Repair Recommendations.

BACKGROUND

Prior to the visual inspection performed by SE, it was mentioned that there were observable physical deficiencies that might require a structural inspection. The observable physical deficiencies were:

- Exterior attic wall with lack of lateral support
- Attic floor bottom chords inadequately padded

Furthermore, at the time of inspection, the attic floor bottom chords were not visible due to a plywood covering. However, due to a structural concern, photographs were provided of the existing conditions to verify the inadequately padded bottom chords.

As a result, SE was contracted to perform a visual structural inspection to assess the physical deficiencies and determine their impact on the structural integrity of the structure.

TYPE OF INSPECTION

SE performed a visual inspection of the home's attic to document any observable structural deficiencies. Photographs were taken of observable structural deficiencies to further document existing conditions and have been provided in Appendix A.

In addition, one photograph of the inadequately padded bottom chords has been provided in Appendix A and was provided at the time of inspection as the chords were unobservable.

INSPECTION FINDINGS

Overall, the attic was observed to be in good physical condition with the following observable structural deficiencies:

- Exterior attic wall with lack of lateral support (See Photograph No. 1 in Appendix A)

Also, although not observable at the time of inspection, the attic bottom chords appear to be inadequately padded as a result of comparison of the existing conditions to the truss manufacturer's bottom chord padding detail. See Photograph No. 2 in Appendix A.

ANALYSIS OF INSPECTION FINDINGS

Exterior Attic Wall

During the inspection the wall was able to be moved laterally by placing two hands on the wall and performing a light series of pushing and pulling motions with the hands and arms. In addition, the wall was observed with some random dimensional lumber members spanning the wall horizontally and supported by diagonal dimensional lumber members connected at its ends.

However, it is the professional opinion of SE based upon previous inspections with similar findings that the attic wall has not been provided with an adequate amount of lateral support due to the ease of pushing and pulling of the wall with hands and arms. Furthermore, it is the opinion of SE that the wall would not perform as required during a significant wind event crossing the structure and pulling on the wall.

Therefore, it is recommended that the wall be provided with additional lateral support to prevent any possible failure of the wall during a significant wind event.

Padded Bottom Chords

Based upon the photographs provided of the existing conditions the bottom chords have not been padded as recommended by the truss manufacturer to provide the chords with their required structural capacity. In addition, the existing padding does not provide lateral stability of the either of the two members now comprising the bottom chord. As a result, the existing conditions do not provide the required structural capacity and could lead to a buckling of one of the two members comprising the bottom chord.

Therefore, it is recommended that the plywood coverings be removed and the bottom chords be padded as recommended by the truss manufacturer MiTek in detail MII-PADBC, PAD BOTTOM CHORD, OCT 23, 2015.

RECOMMENDATIONS

Based upon the analysis of inspection findings it is recommended that the exterior attic wall be provided with additional framing and connections to strengthen the lateral capacity of the wall. In accordance with the International Residential Code, Section R502.11 Wood Trusses, the following is stated:

> R502.11.2 Bracing. Trusses shall be braced to prevent rotation and provide lateral stability in accordance with the requirements in the construction documents for the building and on the individual truss design drawings. In the absence of specific bracing requirements, trusses shall be bracing in accordance with accepted industry practices, such as, the SBCA Building Component Safety Information (BCSI) Guide to Good Practice for Handling, Installing & Bracing of Metal Plate Connected Wood Trusses.

Therefore, it is recommended that the trusses be provided with lateral support as shown Section BSI-B3, Permanent Restraint/Bracing of Chords & Web Members from the above referenced manual.

In addition, it is recommended that the existing bottom chord padding be removed and the bottom chords be padded as recommended by truss manufacturer MiTek in detail MII- MII-PADBC, PAD BOTTOM CHORD, OCT 23, 2015 to provide the chords with their required structural capacity.

Professionally:

Jesse Wastler

Jesse Wastler, P.E.
Professional Engineer (VA)
June 22, 2016

COMMONWEALTH OF VIRGINIA
JESSE WASTLER
Lic. No. 52168
PROFESSIONAL ENGINEER

APPENDIX A
INSPECTION PHOTOGRAPHS

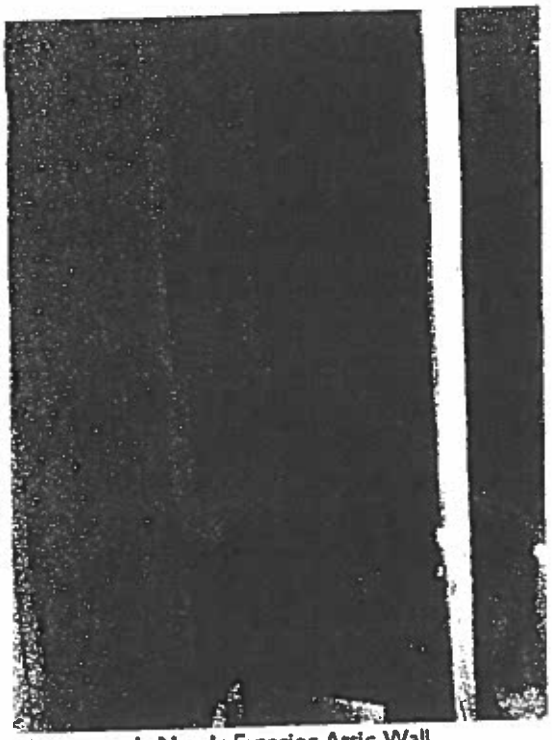

Photograph No. 1: Exterior Attic Wall

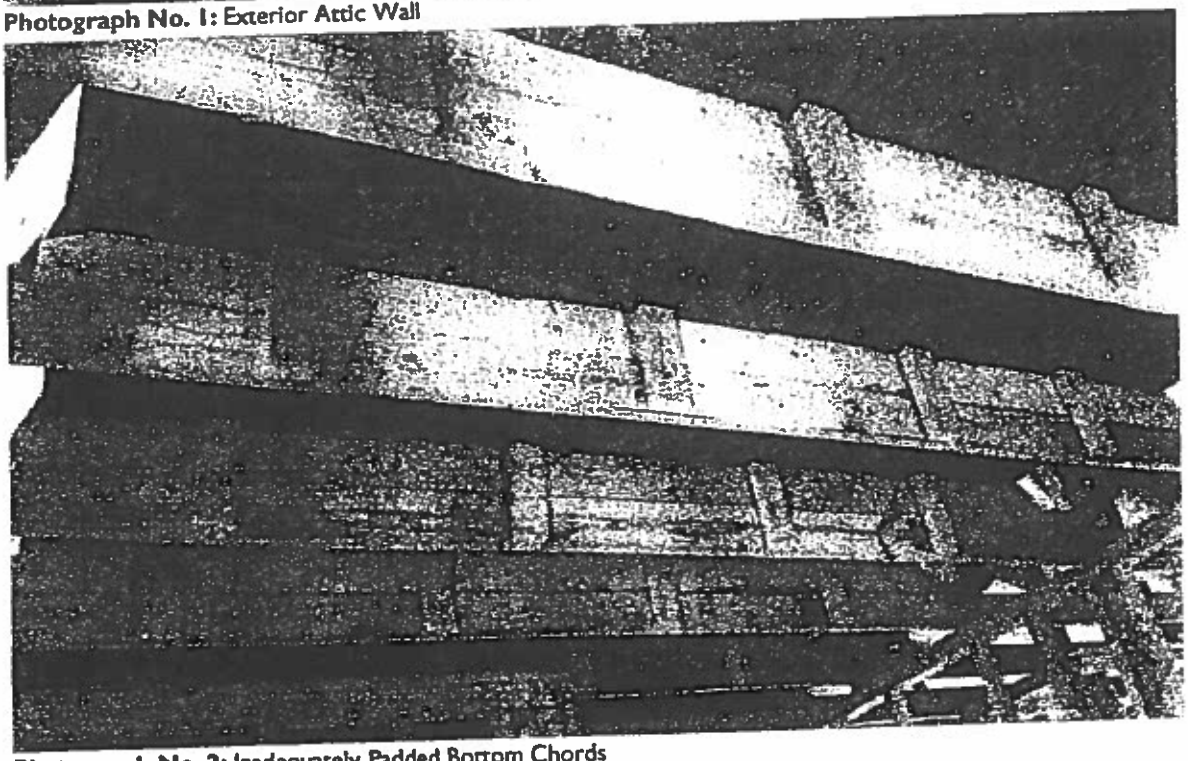

Photograph No. 2: Inadequately Padded Bottom Chords

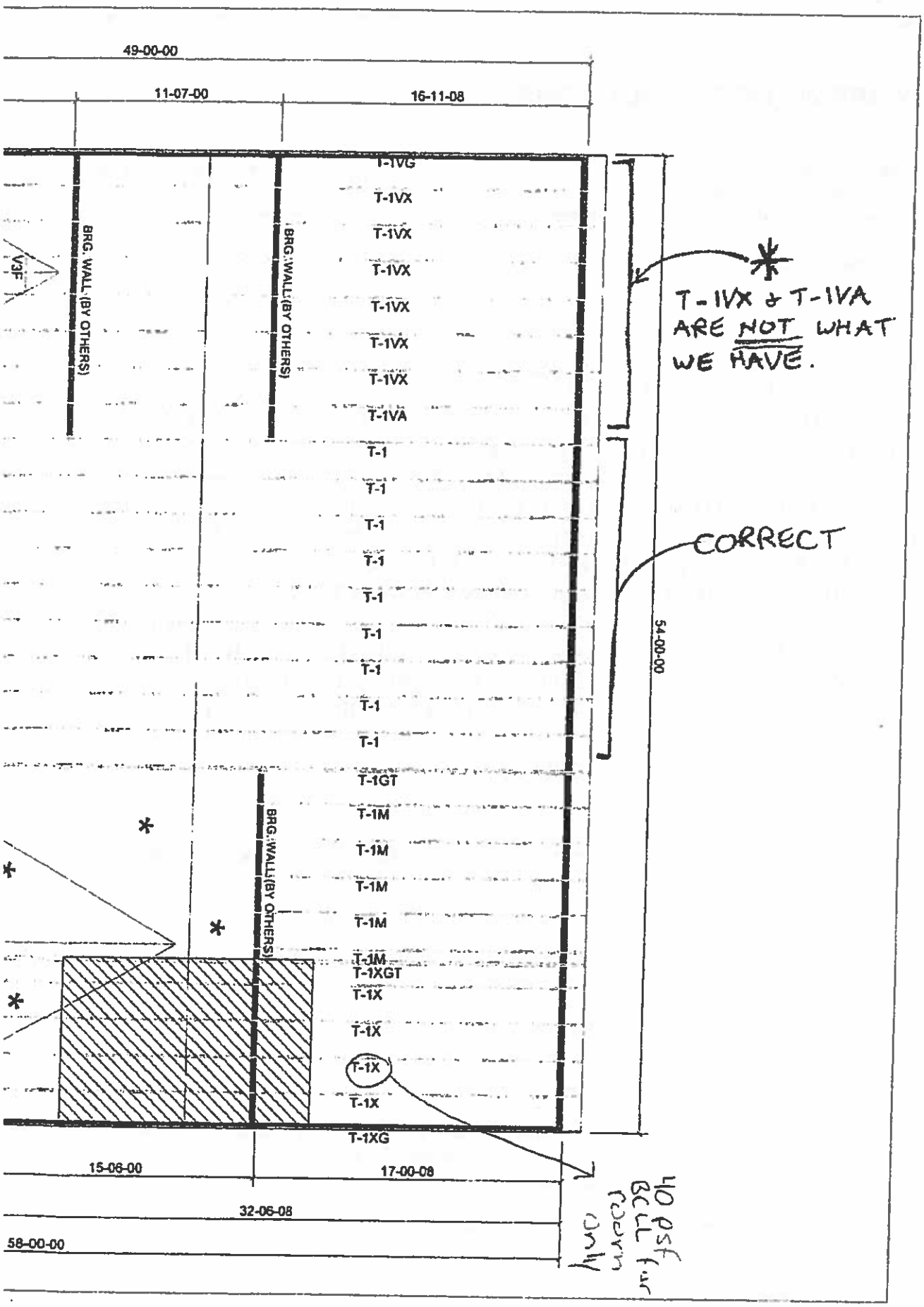
49-00-00
11-07-00
16-11-08
BRG. WALL (BY OTHERS)
BRG. WALL (BY OTHERS)
BRG. WALL (BY OTHERS)
V3F
T-1VG
T-1VX
T-1VX
T-1VX
T-1VX
T-1VX
T-1VX
T-1VA
T-1
T-1
T-1
T-1
T-1
T-1
T-1
T-1
T-1GT
T-1M
T-1M
T-1M
T-1M
T-1M
T-1XGT
T-1X
T-1X
T-1X
T-1X
T-1XG
54-00-00
15-06-00
17-00-08
32-06-08
58-00-00
*
T-1VX & T-1VA ARE NOT WHAT WE HAVE.
CORRECT
40 psf BCLL for room only

Gmail

Leah Thorpe <leahbthorpe@gmail.com>

YEAR END WARRANTY/CONTRACT ITEMS

5 messages

Leah Thorpe <leahbthorpe@gmail.com> Tue, Sep 6, 2016 at 10:11 PM
To: Nick Woodard <nwoodard@finerhomesinc.net>
Cc: gholt@finerhomesinc.net, "Kindervater, William" <kindervaterw@chesterfield.gov>, Greg Thorpe <ghthorpe@yahoo.com>
Bcc: Leah Thorpe <leahbthorpe@gmail.com>

NICK:

WE DROPPED OFF OUR YEAR END PUNCH LIST AT FINER HOMES OFFICE ON *6/30/16.* YOU REPLIED TO THE ITEMS ON THAT LIST ON *7/29/16* (IN RED BELOW). WE SENT YOU OUR REPLY ON *8/6/16* (IN BLUE BELOW). WE DID NOT GET A REPLY FROM YOU UNTIL *8/26/16* (IN GREEN BELOW) AND OUR REPLY TO YOUR E-MAIL ON 8/26/16 IS IN BROWN BELOW. HOPEFULLY THIS WILL BE THE LAST E-MAIL THAT WE WILL HAVE TO SEND. YOU ASKED SEVERAL TIMES IN YOUR LAST TWO E-MAILS TO PROVIDE YOU WITH TIMES TO SCHEDULE PEOPLE. *GREG IS OFF ON FRIDAYS .....THAT IS A GOOD TIME!* IF THEY CAN'T COME ON FRIDAY THEN JUST LET US KNOW WHEN THEY CAN COME.....WE WOULD LIKE TO GET THESE ITEMS RESOLVED ASAP. IT HAS TAKEN OVER TWO MONTHS TO GET THREE OF THE THIRTEEN ITEMS RESOLVED AND IN THE PROCESS OF GETTING THOSE THREE ITEMS DONE, THREE ADDITIONAL ITEMS HAVE BEEN CREATED (CUT FLOOR JOIST, HOLE IN SUB FLOOR, AND RIPS IN VINYL FLOOR IN MASTER BATH).

This email is being sent in response to your year-end punch list request, outlining Finer Homes response to each request. (7/29/16)

1. Provide gas heat hvac upstairs.

Harpers mill contract is to supply gas heat to the house, which has been done on the first floor. The house does not have to have gas heat to both floors and is very common practice to have gas heat on the first floor only *(7/29/16)*

The Harpers Mill contract says that our home will have "energy efficient gas heat and hot water with central air conditioning" it does not specify that it is only on the first floor. The contract does specify that we will have 9' ceilings on the first floor, textured ceilings on the first floor but it does not specify gas heat only on the first floor therefore Finer is legally obligated by the contract to provide gas heat for the entire house. What other builders do and what is commonly done makes no difference. *(8/6/16)*

1. We are not altering the the heating of the second floor. *(8/26/16)*

1. This is a contractual obligation. *(9/6/16)*

2. Repair trusses, padding up of bottom chord, hvac platform, and add support to left gable wall.

We have supplied engineer approved drawings for the current padding up of the trusses. No repair will be made to the padding. We will preform repairs to hvac platform per supplied drawings. We will also add support to left gable wall to enforce it.

Finer Homes received a letter from the Chesterfield County Department of Building Inspection stating that the truss alterations violated the Virginia Statewide Building Code.

The engineer approved drawing for the padding up of the trusses that Finer Homes provided does not have the information on it that is required by the DPOR in the *REGULATIONS Governing Architects, Professional Engineers, Land Surveyors, Certified Interior Designers and Landscape Architects*. It is also against DPOR regulations for an engineer to a stamp a drawing unless the engineer and Finer Homes can prove the engineer has a working knowledge of the project for which the drawing was made. All of the truss drawings that were submitted to the county to obtain the building permit are stamped by Frank Lassiter. According to DPOR if the engineer that designed the trusses (Frank Lassiter) is available then he/she would be the proper person to do the repair drawing. Our expectation for this issue is for Finer Homes to provide repair drawings for the padding up of the trusses, and the bracing of the exterior wall prepared by and stamped by Frank Lassiter (as was done with the HVAC repair) and using those drawings have a Class A contractor make the repairs.

2. Greg is still working on the dispute of the padding of the trusses. We can certainly come make repairs to the gable wall and hvac platform if you have a day available for us to do wo.

2. Greg and I want to see the repair drawings stamped by Frank Lassister for each one of these repairs and we want to know what company is doing the repairs before any work is scheduled. Also, what do you mean the "dispute" about the padding of the trusses. The county sent Finer Homes a letter of defect listing the padding of the trusses as one of the defective items. I sent a picture of how Finer Homes padded up the trusses to the engineer that designed them and he said to tell Structural Technologies to issue a repair drawing. If he thought that the trusses would still perform as they were intended (which is what the building code requires) he would not have said to issue a repair drawing. The drawing that Finer Homes submitted to us was not a repair drawing.....it was a drawing of how the trusses were padded up.

3. Replace spigots with frost free spigots and install as shown with attached request picture.

Hose bibs will be switched out for frost free bibs, spigots will be mounted with standard mounting procedure to the side of the house.

Acceptable

3. Done

3. Plumbers said the swapped the spigots when they did the tub swap.

3. This item has been resolved.

4. Fix loose hardwood in kitchen and hall by garage.

We have replace the subfloor in these areas as suggested by rich dec. If there are still areas loose we will need to have rich dec inspect the areas.

The floors are loose in front of sink, refrigerator and hallway where there was a significant difference in the height of the old sub-floor and the new sub floor. We called and e-mailed Wendy when Thiago came to do the install. She should have all of the information and pictures.

4. Wendy at Rich Dec will be handling the hardwood squeaks. I left her a message again today to go ahead and schedule that with you.

4. As of September 6, 2016 we have not heard from Wendy.

5. Replace bathtub and install new kohler tub with setting compound.

New tub is being installed August 5th, any damaged tile repair will follow installation of new tub.

Acceptable

5. Tub has been replaced. We would like to have an engineer look at the notched joist as well as number 7 for proper repair. Please advise when this can be set up.

5. Please provide us with the name and company name of the engineer that will be inspecting the defects. As you well know, Friday is the most convenient day for appointments. We would also like stamped repair drawings from the engineer for these items.

6. Fix concrete in driveway next to garage door, slope away from garage.

Garlitz concrete has inspected the driveway and stated is is poured to code and no repair is warranted. We have had Apple Door install an upgraded weather stripping giving the garage door a better seal from the elements.

Refer to Letter of Defect sent to Finer Homes by The Chesterfield County Department of Building Inspection.

6. Will be meeting with county inspector and garlitz rep to inspect driveway. Just waiting to hear when we can set that up from the inspector.

6. Gregs e-mail to you regarding this is copied below:

> **Nick,**
>
> **We see two options to repair the driveway:**
>
> **1. Replace the single slab that is pooling and draining to the garage. This option would require careful planning and installation as to match elevations of neighboring slab pieces and still drain away from house. We realize it will not meet the 2%, but if it drains like the others, we will be fine with it.**
>
> **2. Replace ALL slabs necessary to allow proper drainage off the driveway. This would include repairing any lawn and sprinkler damage. We feel the elevation change near property line would not be greatly affected since the water does not drain off driveway there anyway.**
>
> **We did a hose test and every slab piece properly drains to the end pieces along property line (except slab piece in question) and runs towards the back. None of the water actually drains into grass along property line which is fine as long as water continuously flows toward back and then into**

grass.

Neither of these two options allow you to put a harsh or dramatic channel in the driveway.

7. Fix hole in garage block wall where hvac penetrates crawlspace.

Will need speeks to inspect for proper installation.

Refer to Letter of Defect sent to Finer Homes by The Chesterfield County Department of Building Inspection.

7. Would like to have engineer inspect for repair. Please advise when this can be set up.

7. Please provide us with the name and company name of the engineer that will be inspecting the defects. As you well know, Friday is the most convenient day for appointments. We would also like stamped repair drawings from the engineer for these items.

8. Repair chipped concrete on front sidewalk and crack in concrete in driveway.

Garlitz Concrete will patch the chipped section of concrete on the front sidewalk. While cracks and chips are not covered under any warranties we can also fill the crack in the driveway with a surface epoxy at the homeowners request.

Acceptable

8. Garlitz will address after inspection of driveway with inspector.

8. This was not addressed when Jeff Coates came and inspected the driveway for the third time.

9. Replace Freon line insulation. It is torn and the Freon line is sweating causing water to puddle in crawl.

Speeks will insulate all damaged areas on this line.

Acceptable

9. Speeks has been instructed to contact you for scheduling.

9. As of September 6th, Speeks has not contacted us.

10. Replace duct work from master bath vent fan, has a hole.

Crp will repair damaged vent line.

Refer to Letter of Defect sent to Finer Homes by The Chesterfield County Department of Building Inspection. The repair needs to be done by a Class A contractor (who is Crp?)

10. Crp has been instructed to contact you for scheduling.

10. This issue has been resolved.

11. Remove flooring on floors where sub floors have not been screwed down and screw down the subfloor, install new flooring.

We will pull up carpet and padding to screw the subfloor in all carpeted areas. Richmond decorating will re install the same padding and carpet after the subfloor has been screwed down. We will have people available to move furniture as needed.

If padding or carpet is damaged when it is pulled up we would expect it to be replaced. What about vinyl floors?

11. Lydia at Rich Dec will contact you to schedule the pulling of carpet and padding, she will let us know when that will happen and we will have be there to screw the subfloor as they pull the carpet and padding. They will then re install. We will have people available to help with moving furniture. We do not deem it necessary to remove vinyl floor coverings to screw the subfloors. We have discussed the master bath vinyl overspray issue and offered to lay new vinyl over the current. With the new damage from tub swap we will offer the same option. We can overlay that old vinyl with new vinyl in the master bathroom, or we can patch the damaged section next to the tub.

11. Acceptable for the carpet. Finer Homes said that they screw and glue all sub floors. This would include the vinyl floors. It is a contractual obligation.

12. Replace tree in front yard.

Will have to inspect tree for possible warranty coverage.

Acceptable

12. We are no longer using stockners for our landscaping needs, they are neglecting to warranty previous work. I will have our new contractor S&D services inspect the tree. Which tree are we looking at? It may be obvious when seen on sight but I want to make sure they know what they are looking for.

12. It is the tree on the left as you are looking at the house. When we moved in 14 months ago a large branch was broken and we were told it would be replaced.

13. Replace front door with wood composite door.

We will replace the front door slab for a wood composite door per the homeowners request.

Where do we go to pick out the door slab?

13. The replacement door can be selected from N.B Goodwyns on jeff davis. Contact Shelby and she can probably send you what options are available. 804-228-4057

13. Our contract with Finer Homes say's that the exterior features include "insulated wood composite doors". It does not say door slabs and it includes all exterior doors. We will contact Shelby this week to determine if selections are acceptable.

14. This e-mail does not address the question of the discrepancy of the design loads on the contract plans and load limits on the trusses that were installed

14. We are not certain what your question on the discrepancy of trusses is. When constructing the house we go by the truss plans that come from the designer and install them accordingly.

14. On the house plans we received there is a box that says DESIGN LOADS. For the roof it says "30 PSF LIVE LOAD". If you look at the truss drawings, each truss only has a TCLL of 20.0 PSF. Why is there a discrepancy of 10 PSF? Also, in the DESIGN LOADS box on our house plans it says that the design load for all floors, attics, or limited storage is 40 PSF. According to the truss drawings the only two trusses that provide a 40

PSF BCLL are T-1X and T2 which are the finished rooms upstairs. Why don't we have 40 PSF BCLL in the attic/limited storage as is indicated on the house plans?

Please review and supply possible dates to have work preformed. Please allow 2-3 weeks for scheduling so we can get as many things scheduled on one day as possible to minimize the amount of time needed for repairs. (7/29/16)

As you know, Fridays and Saturdays are the best time for us to be available. We will not be available to have repairs done on August 13th, August 19th and August 20th. (8/6/16)

Nick Woodard

Customer Service Supervisor

804-920-1966

Finer Homes Inc. (8/26/16)

Nick Woodard <nwoodard@finerhomesinc.net> [redacted]
To: Leah Thorpe <leahbthorpe@gmail.com>
Cc: "kindervaterw@chesterfield.gov" <kindervaterw@chesterfield.gov>, Greg Holt <gholt@finerhomesinc.net>

1. No repairs

2. Structural Technologies is the company that designs the trusses. Lassiter is just an engineer that stamps them. We have supplied an engineer stamped drawing for the padding as it currently is. I have spoken to Mr Kindervater on this issue as well, they did not have a copy of that stamped drawing when they sent their letter. He now has a copy of that stamped drawing, no repair will be made on the padding of the trusses. We have supplied a drawing for the hvac platform and I will have allen from structural technologies supply a drawing for how we can add support to the gable wall truss as requested as well.

3. Done

4. Wendy and Lydia at Rich Dec said Mr Thorpe refused to setup an appointment for the carpet or hardwood repairs as he was still disputing the vinyl. I will have Rich dec reach out again for scheduling repairs on hardwood squeaks, pulling carpet and padding to screw subfloor and re install, as well as pulling the vinyl sections to screw the subfloor and then replace.

5. Charley Tony with Pro Inspections. He can do this Friday morning between 830-9am.

6 The two options we discussed with Mr Kindervater at your home was to remove 3 slabs butting the garage and get 2% fall. 1 was getting that fall in a short distance and installing a drain at the bottom of the 2%fall. 2 was to create a swale through the 3 slabs moving water to the back. If you would like us to cut out the one slab with the low spot and re pour just that slab we can do this but we will draft a legal document stating the code is that the drive needs 2% fall from the garage and the repair you are requesting does not accomplish this. Finer homes nor Chesterfield county will be responsible after completion as you do not want us to perform the repair as we have suggested. All parties will need to sign.

7 Charley Tony with Pro Inspections. He can do this Friday morning between 830-9am.

8 All concrete repairs will be made at one time

9 Speeks can also come Friday morning to insulate damaged areas of line set.

10 Done

11 I will have Rich dec reach out again for scheduling repairs on hardwood squeaks, pulling carpet and padding to screw subfloor and re install, as well as pulling the vinyl sections to screw the subfloor and then replace.

12 Will look at this Friday.

13 The door as a whole is a wood composite door. The slab is the only thing that is not. We were willing to swap the slab for you to try and make you happy. I spoke with David Beck the owner over a goodwyns. They do not have any slabs that are a wood composite slab. No one uses them, wood composite is the material used for the interior doors. Years back someone came up with a Masonite material door like a wood composite that people used for a bit because they were cheap. Once they started falling apart they started running away from those doors. Technically the doors are considered insulated wood composite, we are not going to change the doors.

14 On the plans we draw, the 30 and 40 psf numbers are the standard loads for a stick built truss. Those numbers are printed on every set of plans because on some models we do we have sections of roof that the trusses are stick built and those are the loads. A savannah does not have any stick built trusses. So those numbers are don't mean anything on your home, they are just standard print on our plans. The truss package supplied by structural technologies have they loads for the trusses that are being used. Both the truss package numbers and the standard print loads on our plans for stick built trusses are supplied for every homes plans, as other models different from the savannah have both stick built and engineered trusses being used.

Nick Woodard

Customer Service Supervisor

804-920-1966

Finer Homes Inc.

From: Leah Thorpe [mailto:leahbthorpe@gmail.com]
Sent: Tuesday, September 06, 2016 10:12 PM
To: Nick Woodard <nwoodard@finerhomesinc.net>
Cc: Greg Holt <gholt@finerhomesinc.net>; Kindervater, William <kindervaterw@chesterfield.gov>; Greg Thorpe <ghthorpe@yahoo.com>
Subject: YEAR END WARRANTY/CONTRACT ITEMS

[Quoted text hidden]

[Quoted text hidden]

[Quoted text hidden]

Leah Thorpe <leahbthorpe@gmail.com> Wed, Sep 7, 2016 at 1:34 PM
To: leah_thorpe@ccpsnet.net

[Quoted text hidden]

Leah Thorpe <leahbthorpe@gmail.com> Wed, Sep 7, 2016 at 1:35 PM
To: Greg Thorpe <ghthorpe@yahoo.com>

——— Forwarded message ———
From: "Nick Woodard" <nwoodard@finerhomesinc.net>
Date: Sep 7, 2016 12:16 PM
Subject: RE: YEAR END WARRANTY/CONTRACT ITEMS
To: "Leah Thorpe" <leahbthorpe@gmail.com>
Cc: "kindervaterw@chesterfield.gov" <kindervaterw@chesterfield.gov>, "Greg Holt" <gholt@finerhomesinc.net>

[Quoted text hidden]

Leah Thorpe <leahbthorpe@gmail.com> Wed, Sep 7, 2016 at 8:15 PM
To: Nick Woodard <nwoodard@finerhomesinc.net>
Cc: gholt@finerhomesinc.net, "Kindervater, William" <kindervaterw@chesterfield.gov>, Greg Thorpe <ghthorpe@yahoo.com>
Bcc: Leah Thorpe <leahbthorpe@gmail.com>

Nick:

Friday at 8:30 is fine for Mr. Toney from Pro Inspections to come look at the cut floor joist and the hole in the block wall in the garage where the HVAC penetrates the crawl space. It is also fine for Speeks to come and replace the freon line insulation.

1. Not acceptable.

2. Not acceptable for the padding up of the trusses. The drawing for the padding up of the trusses that was provided is not valid and Mr. Kindervater had seen it before he wrote the letter.

   We will have to see the repair drawing for the gable wall before we sign off on it.

4.. Lydia called Greg and he did not refuse to schedule. He said that he wanted to get it all done at the same time and you had still not agreed to pull up the vinyl and screw down the sub floor and replace the vinyl. We were waiting to resolve that conflict so that they would not have to come here twice. Wendy never called Greg.

5. Acceptable

6. Not acceptable. We feel that we should not have to accept anything less than what we would have had if it had been done correctly in the first place. We should not have to settle because the driveway was not poured to code and the building inspector missed it.

7. Acceptable

8. Acceptable

9. Acceptable

11. Acceptable

12. Acceptable

13. Not acceptable. Does not make sense to list it as an exterior "feature" of a home built in Harpers Mill if wood composite is only used as an interior door.

14. Not acceptable. The house plans were part of the legal contract. It makes no sense at all that random specifications can be listed that don't apply.

We will see you Friday.

Greg and Leah Thorpe
[Quoted text hidden]

Leah Thorpe <leah_thorpe@ccpsnet.net>

Your residence

1 message

Witt, Rick <WittR@chesterfield.gov> Fri, Sep 30, 2016 at 4:03 PM
To: "Leah Thorpe (leah_thorpe@ccpsnet.net)" <leah_thorpe@ccpsnet.net>, "ghthorpe@yahoo.com" <ghthorpe@yahoo.com>
Cc: "Clements, Ron" <ClementsRo@chesterfield.gov>, "Kindervater, William" <KindervaterW@chesterfield.gov>, "Davis, Chris" <DavisCh@chesterfield.gov>, "gholt@finerhomesinc.net" <gholt@finerhomesinc.net>

Mr. and Mrs. Thorpe,

This week I met with my staff members that have been involved at some point with the issues at your residence in order to understand the entire picture and to be able to answer questions you have raised. This response will also document the applicable code violations based on our observations and the status of those violations. Also I have copied Finer Homes with this response so that all parties involved have an understanding of what needs to be addressed moving forward. The following is an itemized list of each issue, the status and our determinations concerning code compliance:

Bathtub Installation (resolved):

The master bath tub was not properly bedded per the manufacturer's instructions as required per P2609.2. This defect was cited in August 3, 2016 letter of defect. That defect has been corrected.

Bathroom Ventilation (resolved):

The bathroom exhaust duct hole was cited in the August 3, 2016 letter of defect. That defect has been corrected.

Bathtub cut out sealing (outstanding):

The code reference in the letter of defect dated September 16, 2016 regarding sealing the

thermal envelope where the sub-floor is cut for the bathtub is correct. I understand your confusion in that it references two code sections. The N1102.4.1 code section is the air leakage code provisions section in the USBC Virginia Residential Code. The R402.4.1 reference is the companion code provision that is in the Virginia Energy Conservation code. It is the same provisions in two separate code books. This opening in the thermal envelope must be sealed. This defect is still outstanding.

Bathtub drain floor joist notch (outstanding):

The top cord of a floor joist was notched to accommodate a bathtub drain. Per R502.8.2 this notch must be corrected per design documentation submitted from the joist manufacturer or a registered design professional. This defect was cited in September 16, 2016 letter of defect. This defect is still outstanding.

Driveway drainage (outstanding):

Per the exception to USBC section R401.3, the driveway slope is required to be 2% away from the building within 10 feet of the building. The driveway is in violation of this provision. The violation is listed on the August 3, 2016 letter of defect and has not been corrected; therefore it is noted on the September 16, 2016 notice of violation. To comply with code the driveway must be sloped 2% away from the building within 10 feet of the building where the driveway abuts the building. The use of a swale beyond 10 feet from the building may be used to divert the drainage towards the street and storm water collection system for the sub-division. The first sentence of the exception allows the use of drains and swales as an alternative to providing the 6 inch in 10 foot (5%) slope if there are lot lines, barriers or slopes that would prevent achieving the slope. The second sentence stands on its own and permits a shallower 2% slope when the surface is impervious. This reduction in slope is allowed because the impervious surface provides less resistance to sheet flow. The 2% impervious allowance applies regardless of the qualifications that limit use of the first sentence. It is correct to state that if you do not have lot lines, barriers or slopes that would prevent achieving the 5% slope you cannot use a swale in place of the slope for the first 10 feet. Use of a swale or drain is not prohibited per R401.3 to divert the water towards the storm sewer system once you get beyond 10 feet from the building. This defect is still outstanding.

Foundation wall bearing (outstanding):

A portion of the foundation wall was removed when HVAC ductwork was installed. This removed the bearing for the joist and sill plate required per R502.6. This defect was cited in

August 3, 2016 letter of defect. This defect is still outstanding beyond the 30 days granted to make repairs; therefore the defect has been cited in the September 16, 2016 notice of violation. This defect is still outstanding.

Alteration of trusses:

Truss alteration for window installation (outstanding)::

This defect was cited in the August 3, 2016 letter of defect. This condition is where the gable end truss cords were cut to accommodate a window. Though the gable end truss does not support a significant load it is an engineered element and modifications of the element must be approved by a registered design professional. This defect is still outstanding beyond the 30 days granted to make repairs; therefore the defect has been cited in the September 16, 2016 notice of violation. This defect is still outstanding.

Truss alteration for support of an HVAC platform above (outstanding):

This defect was cited in the August 3, 2016 letter of defect. This condition is where some trusses were modified to support an elevated HVAC equipment platform. Such modifications of an engineered truss must be approved by a registered design professional. This defect is still outstanding beyond the 30 days granted to make repairs; therefore the defect has been cited in the September 16, 2016 notice of violation. This defect is still outstanding.

Truss alteration to build up the bottom cord depth (resolved):

This issue was cited in the August 3, 2016 letter of defect. This condition is where some trusses were modified "padded" to increase the depth of the truss bottom cords to accommodate insulation. The padding was not installed to repair damage to the truss or increase the truss members load capacity. The Truss was originally designed for limited storage per section R301.6 as detailed in the notes section of the truss design document. Such modifications of an engineered truss do not affect the load bearing capacity of the truss and approval by a registered design professional is not required. Based on your concern Mrs. Thorpe, we did include the condition in our letter of defect. Finer Homes had Virginia licensed engineer James H. Fletcher verify and document that the "padding" of the truss bottom cord was acceptable and we accepted Mr. Fletcher's detail, seal dated June 16, 2016, in accordance with USBC 112.3. I understand that you have received input from other engineers with differing recommendations and opinions. After review of the other opinions that you have provided I have determined that there is no compelling evidence that their opinions have established a code violation or sufficiently called into question the determination of Mr. Fletcher, P.E. We have determined that this issue is not a code violation and it is not referenced in the

September 16, 2016 notice of violation.

Compliance times:

The compliance times were increased due to our understanding that you required a several weeks of notice before Finer Homes can come onsite and correct the violations. We would be happy to facilitate a quicker response from Finer Homes based on your availability to allow them onsite.

It is our goal to have all code violations corrected at your home and to facilitate these corrections in an expedited manner. My staff has received a commitment from Finer Homes that they will correct all violations noted. To correct these violations Finer Homes will need access to those areas requiring correction. It is my departments desire that a mutually agreeable date and time can be arranged for resolution to all the issues.

As email correspondence is not often the best method of communication, my staff and I are willing to meet with you at your home after normal working hours at a mutually agreeable time to answer any further questions you may have. I also can reached at 804 751-4161

Rick Witt

Gmail

Leah Thorpe <leahbthorpe@gmail.com>

Complaint

2 messages

Leah Thorpe <leahbthorpe@gmail.com> Mon, Oct 3, 2016 at 8:58 AM
To: complaintanalysis@dpor.virginia.gov
Cc: Greg Thorpe <ghthorpe@yahoo.com>
Bcc: Leah Thorpe <leahbthorpe@gmail.com>

To Whom It May Concern:

I have attached my complaint form and documentation for my complaint against James H. Fletcher. Please let me know if there is additional information that you need. Thank you.

Sincerely,

Leah Thorpe

8 attachments

TRUSS MODIFICATION 5-23 1.jpg
1756K

platform for HVAC 5-2-15.jpg
1889K

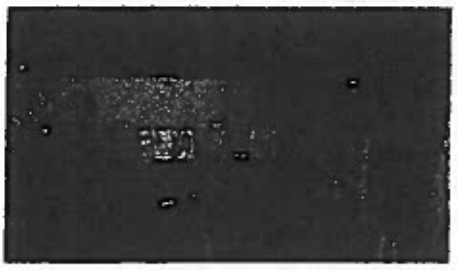

HVAC in attic 5-7-15.jpg
1546K

Department of Professional and Occupational Regulation

FOR OFFICE USE ONLY
LICENSE NUMBER:
EXPIRATION DATE:
FILE NUMBER:

NOTE: The Department cannot guarantee anonymity. By law, all complaints received by the Department are subject to public disclosure once a case is closed. Therefore, if you wish to file a complaint anonymously, please do not submit the complaint electronically. In addition, do not include any personal information on the complaint form or any supplemental documents that reveal your identity. While the Department may accept an anonymous complaint, it will not proceed if it lacks sufficient information to support a regulatory or criminal violation.

COMPLAINT FILED BY

Name: Leah Thorpe

Company (Your company name if filing on behalf of a company):

Mailing Address: 16300 Longlands Road

City, State, and Zip: Chesterfield, VA 23832

Phone Numbers: 804-378-2480 ext. 227 (BUSINESS) (804) 218-8493 (CELL) (HOME/OTHER)

Email Address: leahbthorpe@gmail.com

Address where problem occurred: 16300 Longlands Road

City/County: Chesterfield, VA 23832

How did you hear about DPOR?
- [ ] Newspaper
- [ ] TV
- [ ] Radio
- [x] Internet
- [ ] DPOR publication, speaker, or contact
- [ ] Referred by
- [ ] Other

COMPLAINT AGAINST

Individual Name: James Herman Fletcher

Company: Not known

Address: Not known

City, State, and Zip: Not known

Phone Numbers: Not known (BUSINESS) Notknown (CELL) Not known (HOME/OTHER)

Email Address: Not known

Type of License and/or License Number: Professional Engineer 0402026629

To process a Complaint Form, supporting documents are needed, which may include the following:

ALL BOARDS	Copies of all relevant documentation, including, but not limited to: contracts, agreements, invoices, receipts, correspondence, and photographs (all pages - front and back)
CONTRACTOR	Copy of contract, Proof of Payment, Building Official Documentation, Notice of Violation
REAL ESTATE	Purchase Contracts, Listing Agreements, Settlement Statements, Cancelled Checks, Disclosure Statements, Management Agreements, Leases
APPRAISER	Copy of Appraisal
LAND SURVEYOR	Copy of Survey
BARBERS & COSMETOLOGY	Copy of Medical Records/Photos (re: injuries)

SECTION III: COMPLAINT DESCRIPTION

Describe the complaint. If more room is needed, include an additional document with submittal.

On June 1, 2016 we sent pictures (attached) of an HVAC platform that was installed in our attic and 'padded up' trusses to Frank Lassister, who is the PE that stamped our original truss drawings. He emailed us back on June 2, 2016 telling us to have Structural Technologies, the company that Finer Homes (our builder) purchased the trusses from, to issue repair drawings for both items. On June 20, 2016 we received from Finer Homes the drawing for the HVAC platform repair which was prepared and stamped by Frank Lassiter (attached). On June 21, 2016 we received a 'repair' drawing from Finer Homes for the padded up trusses which was prepared and stamped by James H. Fletcher (attached). As you can see the 'repair'drawing by James H Fletcher for the padded up trusses is nothing more than a PDF 'as built' drawing of exactly what Finer Homes did. When we emailed Finer Homes and asked what company Mr. Fletcher worked for we were told Fletcher and Associates. We looked the number up on the Internet and called and the phone was not longer in service. We are filing this complaint against Mr. Fletcher on the grounds that he has violated Section 18VAC10-20-740 PROFESSIONAL RESPONSIBILITY, item B, and 18VAC10-20-760, USE OF SEAL, items A, B, and E, of The Commonwealth of Virginia REGULATIONS Governing Architects, Professional Engineers, Land Surveyors, Certified Interior Designers and Landscape Architects.

We believe that Finer Homes should have obtained both repair drawings from Mr. Lassiter as he was the engineer that prepared and stamped the original truss drawings. We also believe that Finer Homes sought out a different engineer because Mr. Lassiter did not agree with the method of construction that Finer Homes used to pad up our trusses and would not have stamped the drawing that Mr. Fletcher stamped. We were very suspicious of the repair drawing done by Mr. Fletcher so we hired Jesse Wastler of Systematic Engineering to inspect our attic and he agreed with Mr. Lassiter that the method of construction was not adequate. We have also attached his report. We have all of the emails from the parties involved if needed

I wish to complain about the individual/business named above. I understand that a regulatory board does not have the authority to require a licensee to return money, correct deficiencies, or provide other personal remedies. I further understand that decisions regarding criminal prosecutions are at the discretion of the Department and the Commonwealth's Attorney. I am submitting this information so that the Department may determine whether disciplinary or criminal action against this individual or business should be considered. I verify under penalty of law that the information provided is true to the best of my knowledge.

Full Name Leah Thorpe Leah Thorpe Date 10-3-16

SECTION IV: HOW TO SUBMIT THIS FORM

Please return this form one of the following ways:

EMAIL * complaintanalysis@dpor.virginia.gov
* BEFORE SUBMITTING VIA EMAIL, PLEASE SEE INSTRUCTIONS BELOW

FAX (866) 282-3932

MAIL

Department of Professional and Occupational Regulation
Regulatory Programs & Compliance
Complaint Analysis & Resolution
9960 Mayland Drive, Suite 400
Richmond, Virginia 23233-1485

Contact Information:

Dept. of Professional and Occupational Regulation
Complaint Analysis & Resolution

COMPLAINTS - (804) 367-8504
VA RELAY* - 7-1-1
HOTLINE FOR OLDER VIRGINIANS - (804) 367-2178
EMAIL - complaintanalysis@dpor.virginia.gov
WEBSITE - www.dpor.virginia.gov

* Virginia Relay enables people who are deaf, hard of hearing, Deaf Blind, or speech disabled to communicate by TTY (text telephone) or another assistive telephone device with anyone who uses a standard phone.

*** There is a size limit for documents submitted via email. If your attachments exceed 18 MB, a non-delivery receipt will be sent to you. If you exceed the limit, please submit the complaint form and supporting documents to the mailing address above.**

DPOR COMPLAINT-JAMES FLETCHER.pdf
404K

EMAIL-JAMES FLETCHER COMPLAINT.pdf
2696K

FLETCHER REPAIR.pdf
588K

REPAIR FOR HVAC-LASSITER.pdf
985K

SYSTEMATIC ENGINEERING REPORT.pdf
400K

DPOR: Complaint Analysis (DPOR) <complaintanalysis@dpor.virginia.gov> Mon, Oct 3, 2016 at 9:57 AM
To: Leah Thorpe <leahbthorpe@gmail.com>

The complaint you filed was received by the Department on October 3, 2016, however no file number has been assigned at this time. Please allow five to seven business days for the complaint to be docketed. Thereafter, the complaint will be prepared for an initial review. Licensing information will be verified and a complaint history, if any, will be compiled for the individual and the firm you named on the complaint form. Sometimes during an initial review, analysts may find it necessary to contact you in writing for clarification of specific points in your summary or to request additional information.

Once the initial review is complete, you will receive written notification. This process takes at least three weeks depending upon the nature of the complaint issues and whether we need to request additional information from you.

Thank you,

Complaint Analysis and Resolution

Governmental email is generally subject to disclosure pursuant to the Virginia Freedom of Information Act. However, if you have received this message in error, please notify the Sender and delete the message as well as all attachments.

From: Leah Thorpe [mailto:leahbthorpe@gmail.com]

COMMONWEALTH of VIRGINIA

Department of Professional and Occupational Regulation

Terence R. McAuliffe
Governor

Todd Haymore
Secretary of
Commerce and Trade

Jay W. DeBoer
Director

October 7, 2016

Leah Thorpe
16300 Longlands Road
Chesterfield VA 23832

RE: File No. 2017-00867

Dear Leah Thorpe:

Thank you for sending the Virginia Department of Professional and Occupational Regulation ("the Department") information regarding your situation. The complaint has been assigned the above-referenced file number. Please provide this number if you contact our office about the complaint.

In order to process the complaint, please send the following additional information no later than **Monday, October 24, 2016**. **Please provide as much information as possible. If you are unable to provide all of the documentation requested, please explain the reason in writing.** If the information is not received by the above date, the Department may not be able to proceed in this matter and the file may be closed with no further action.

- **The complaint alleges that Mr. Fletcher's June 8, 2016 drawing is "nothing more than a PDF 'as built' drawing of exactly what Finer Homes did." Please provide a copy of the original truss drawings referenced in the second paragraph of the complaint prepared by Mr. Lassiter and a copy of the drawings of the trusses as actually installed by Finer Homes, showing that the work performed by Finer Homes deviated from the truss drawings originally prepared by Lassiter; and**
- **Provide a copy of any documentation from the local building official's office stating that Fletcher's June 8, 2016 drawing would be insufficient to ensure compliance with applicable building codes. Also, if required building permits were obtained pursuant to the original truss drawings prepared by Lassiter, and if Finer Homes deviated from said drawings, please also provide a copy of any documentation from the building official regarding any actions taken**

by the building official against Finer Homes in response to deviations from the Lassiter's plans.

If the requested information is received by the above date, the Department will conduct an initial analysis of the complaint. The initial analysis includes giving the respondent, who is the subject of the complaint, a copy of the complaint and an opportunity to submit a written response. Staff may close the file or further process the file.

Staff may collect additional evidence, interview witness(es), and/or perform site visits. Upon review of the evidence, staff will determine if probable cause exists to support a violation of the Board's regulations and/or laws. If no probable cause of a violation is established, the file will be closed with no further action.

If the evidence supports possible violation(s) of the Board's regulations and/or laws, the Department will further process the file for disciplinary action. The purpose of the disciplinary process is to determine if the evidence supports a finding that a violation has occurred. This may be accomplished through the use of a Consent Order or an Informal Fact-Finding Conference ("IFF"). The respondent may agree to violations of the Board's regulations and/or laws by accepting a Citation or agreeing to a Consent Order. Otherwise, if an IFF is held, it will be open to the public and you may be contacted, if it is determined your participation is necessary.

The Board may take disciplinary action against the licensee to suspend, revoke, fine, or fail to renew a license when probable cause exists. A regulatory board cannot require any individual or business to refund money, correct deficiencies, or provide other personal remedies. Ethical, civil, and legal issues will not be addressed by the Board. In some cases, a civil law suit may be your only recourse to resolve a matter. The Department cannot provide legal advice. Should you feel that you have cause for a civil law suit, you may wish to consult an attorney.

The Department considers all complaints important. The processing of the complaint will be conducted in as timely a manner as possible. Many complaints, however, present an immediate threat to public safety and must be given priority. Thank you for your patience during the complaint process.

You will be notified regarding actions taken by the Department and/or Board regarding the file. Please keep us informed of any changes in your address or phone numbers.

The Department thanks you for reporting suspected violations of the Board's regulations and/or laws. It is through your cooperation and assistance that all citizens of the Commonwealth of Virginia enjoy the protections of well-regulated professions and occupations.

You may respond by regular mail, fax at (866) 282-3932 or email at complaintanalysis@dpor.virginia.gov. If you have any questions, please call (804) 367-0878.

Sincerely,

Paula Muniec

Paula Muniec
Investigative Analyst
Complaint Analysis and Resolution

Gmail

Leah Thorpe <leahbthorpe@gmail.com>

File No. 2017-00867

5 messages

Leah Thorpe <leahbthorpe@gmail.com> Fri, Oct 21, 2016 at 4:51 PM
To: complaintanalysis@dpor.virginia.gov

Dear Ms. Muniec:

As requested, I have attached a copy of the original truss drawings. The trusses that were installed by Finer Homes are the same trusses that are in the drawings except that they modified the trusses labeled T-1VA and T-1VX by adding a 2 x 6 to the bottom chord. They did this without consulting the engineer that stamped the original truss package. They also did not modify the truss information given to the county to obtain a building permit and they did not tell us that they were altering the trusses. I have attached our Roof Truss Layout diagram so that you can see what trusses were modified.

We contracted with Finer Homes to build a Savannah with a habitable attic. They told us that if we did not choose the habitable attic option before construction started that we would never be able to make our attic habitable. The option cost $4,000.00 and we chose to add that option to our contract. On April 18, 2015 we noticed that the trusses they had installed were not correct. We emailed them and they seemed shocked that this could happen but not to worry.....they could fix it. This was quite a different story than they told when we were signing the contract. We did our homework and found that modifying manufactured trusses was very difficult and we were not comfortable with having them modify the trusses in any way so we just told them to leave it as it was. WE DID NOT KNOW AT THAT TIME THAT THEY HAD ALREADY MODIFIED THE TRUSSES. The builder, Greg Holt admitted to us that he had caught the error in the paperwork and told the person that orders their trusses to make sure he called the truss company and made the correction and unfortunately that was never done. I am not sure why the trusses sat on our lot for 6 days and it never occurred to Mr. Holt to have someone check them and make sure they were right.

We closed on our home on June 30, 2015. During the final walk-through we asked their supervisor for the load limits on the attic. He promised he would get them for us. We did not get a copy of our truss drawings until May of 2016. The first thing we noticed was the drawing were for a Savannah with a partial attic. We then noticed the discrepancy in the bottom chord height and went back through pictures we had taken during construction and saw what they had done. When we expressed our concern about the modification they said they would have the engineer that designed the trusses come talk to us to assure us that it was okay. They had Allan Simmons, the VP of Sales and Marketing for Structural Technologies come and talk to us.....not the engineer that designed our trusses. He assured us that this method of construction was done all of the time and that some builders even bought the trusses with the smaller bottom chord and padded them up themselves because it was cheaper. He also assured us that Frank Lassister just made a lot of money putting his stamp on our drawings because the metal plate connector company has to stamp the drawings and their were not very many companies that did this. Mr. Simmons assured us that Frank Lassiter "didn't care about our trusses". I called Mr. Lassister the next day and he was very nice and asked me to email him the picture of the padded up trusses and the truss drawings. He emailed me back the next day and said to tell Structural Technologies to issue repair drawings.. I did this and Mr. Simmons asked for pictures which I sent and through a series of emails he told me that the repair drawing were being done by Mitek and I would get copies when they were complete. Finer Homes had also added an HVAC platform in the trusses without consulting an engineer and a repair drawing was being done for that also.

During the month of June I also contacted the Building Inspection office about the truss modifications and other items we were concerned about. Mr. Kindervator assured me that the padding up of the trusses met code but when asked to put it in writing he would not. When I met with Mr. Kindervator on June 22, 2016, I showed him the repair drawing that Finer had given us that was stamped by James Fletcher and expressed my concerns about it being a valid drawing. He said as long as it was stamped by an engineer it could be written on a scrap of paper and it would be valid. I emailed the picture of the padded up trusses to the state building inspection office and I was told that there was not a prescriptive practice for this method of construction but a performance standard that had to be met using an analysis of loads and stresses. When I emailed this to Mr. Kindervater he then included the padding up of the trusses in the Letter

of Defect that the Department of Building Inspections sent Finer Homes on August 3rd. I assumed that since he had seen the drawing and still included the item as a defect that he also did not think it was valid.

Finer Homes did not seem to take the Letter of Defect very seriously as they did not fix but two items listed in the Letter of Defect in the thirty day period. Also, while fixing, replacing the bathtub, they created two more violations by cutting completely through an I joist and cutting a 6 x 14 hole under our tub. I emailed Mr. Kindervator and asked if a Letter of Violation had been sent to Finer Homes since they had not complied within the 30 days. I also reminded him that by law, building inspections had to issue the letter and not take "an informal approach". He said that the Letter of Violation would be issued and also a Letter of Defect for the new code violations. In the Letter of Violation the padding up of the trusses was listed as resolved because the department of building inspections now had the "repair" drawing by Mr. Fletcher and the Building Official, Mr. Witt had said it was acceptable. I met with Chesterfield County's assistant county administrator two weeks ago regarding this issue and I am appealing the Building Officials decision.

I have attached the truss design drawings, the truss layout, the repair drawing for the HVAC platform done by Frank Lassiter, and e-mails between myself and the building inspectors and county administrators.

A building permit was obtained by Finer Homes using the attached truss drawings. Finer Homes did not submit amended truss drawings stamped by an engineer or Registered Design Professional when they deviated from the original truss drawings. The first Letter of Defect does include the padding up of the trusses as a defect and I firmly believe that I will win the appeal regarding the decision of the Building Official to accept Mr. Fletcher's drawing.

It is my understanding from reading the documentation from DPOR regarding the ethical standards of PE's that at the very least Mr. Fletcher has not complied with the format in which a drawing should have, which would include a cover page with contact information. His drawing is not verifiable. Also, the documentation on the DPOR website says that when the original engineer that created the drawings is available then he/she would be the correct person to issue the repair.

Thank you for your time and consideration. I am sending some attachments in a second e-mail since my first email was not deliverable because it was too big.

Respectfully,

Leah Thorpe

2 attachments

ORIGINAL TRUSS DRAWINGS-THORPE.pdf
11508K

LETTERS OF DEFECT AND NOTICE OF VIOLATION.pdf
2000K

Leah Thorpe <leahbthorpe@gmail.com> Fri, Oct 21, 2016 at 4:53 PM
To: complaintanalysis@dpor.virginia.gov

Dear Ms. Muniec:

I have attached more documents for your review. Thank you.

Leah Thorpe

4 attachments

E-MAIL WITH COUNTY DEPUTY COUNTY ADMINISTRATOR.pdf
2160K

TRUSS LAYOUT-THORPE.pdf
293K

EMAILS TO BUILDING INSPECTORS.pdf
5096K

HVAC PLATFORM REPAIR BY LASSITER.pdf
925K

Leah Thorpe <leahbthorpe@gmail.com> Fri, Oct 21, 2016 at 4:57 PM
To: Leah Thorpe <leahbthorpe@gmail.com>

[Quoted text hidden]

2 attachments

ORIGINAL TRUSS DRAWINGS-THORPE.pdf
11508K

LETTERS OF DEFECT AND NOTICE OF VIOLATION.pdf
2000K

DPOR: Complaint Analysis (DPOR) <complaintanalysis@dpor.virginia.gov> Mon, Oct 24, 2016 at 9:08 AM
To: Leah Thorpe <leahbthorpe@gmail.com>

Your email and attachments have been given to Ms. Muniec for processing.

Thank you,

Complaint Analysis and Resolution

Governmental email is generally subject to disclosure pursuant to the Virginia Freedom of Information Act. However, if you have received this message in error, please notify the Sender and delete the message as well as all attachments.

From: Leah Thorpe [mailto:leahbthorpe@gmail.com]
Sent: Friday, October 21, 2016 4:51 PM
To: DPOR: Complaint Analysis (DPOR)
Subject: File No. 2017-00867

[Quoted text hidden]

DPOR: Complaint Analysis (DPOR) <complaintanalysis@dpor.virginia.gov> Mon, Oct 24, 2016 at 9:08 AM
To: Leah Thorpe <leahbthorpe@gmail.com>

Your email and attachments have been given to Ms. Muniec for processing.

Thank you,

Gmail

Leah Thorpe <leahbthorpe@gmail.com>

File No. 2017-00867

1 message

Leah Thorpe <leahbthorpe@gmail.com> Fri, Oct 21, 2016 at 4:00 PM
To: complaintanalysis@dpor.virginia.gov
Bcc: Leah Thorpe <leahbthorpe@gmail.com>, Greg Thorpe <ghthorpe@yahoo.com>

Dear Ms. Muniec:

As requested, I have attached a copy of the original truss drawings. The trusses that were installed by Finer Homes are the same trusses that are in the drawings except that they modified the trusses labeled T-1VA and T-1VX by adding a 2 x 6 to the bottom chord. They did this without consulting the engineer that stamped the original truss package. They also did not modify the truss information given to the county to obtain a building permit and they did not tell us that they were altering the trusses. I have attached our Roof Truss Layout diagram so that you can see what trusses were modified.

We contracted with Finer Homes to build a Savannah with a habitable attic. They told us that if we did not choose the habitable attic option before construction started that we would never be able to make our attic habitable. The option cost $4,000.00 and we chose to add that option to our contract. On April 18, 2015 we noticed that the trusses they had installed were not correct. We emailed them and they seemed shocked that this could happen but not to worry.....they could fix it. This was quite a different story than they told when we were signing the contract. We did our homework and found that modifying manufactured trusses was very difficult and we were not comfortable with having them modify the trusses in any way so we just told them to leave it as it was. WE DID NOT KNOW AT THAT TIME THAT THEY HAD ALREADY MODIFIED THE TRUSSES. The builder, Greg Holt admitted to us that he had caught the error in the paperwork and told the person that orders their trusses to make sure he called the truss company and made the correction and unfortunately that was never done. I am not sure why the trusses sat on our lot for 6 days and it never occurred to Mr. Holt to have someone check them and make sure they were right.

We closed on our home on June 30, 2015. During the final walk-through we asked their supervisor for the load limits on the attic. He promised he would get them for us. We did not get a copy of our truss drawings until May of 2016. The first thing we noticed was the drawing were for a Savannah with a partial attic. We then noticed the discrepancy in the bottom chord height and went back through pictures we had taken during construction and saw what they had done. When we expressed our concern about the modification they said they would have the engineer that designed the trusses come talk to us to assure us that it was okay. They had Allan Simmons, the VP of Sales and Marketing for Structural Technologies come and talk to us.....not the engineer that designed our trusses. He assured us that this method of construction was done all of the time and that some builders even bought the trusses with the smaller bottom chord and padded them up themselves because it was cheaper. He also assured us that Frank Lassister just made a lot of money putting his stamp on our drawings because the metal plate connector company has to stamp the drawings and their were not very many companies that did this. Mr. Simmons assured us that Frank Lassiter "didn't care about our trusses". I called Mr. Lassister the next day and he was very nice and asked me to email him the picture of the padded up trusses and the truss drawings. He emailed me back the next day and said to tell Structural Technologies to issue repair drawings.. I did this and Mr. Simmons asked for pictures which I sent and through a series of emails he told me that the repair drawing were being done by Mitek and I would get copies when they were complete. Finer Homes had also added an HVAC platform in the trusses without consulting an engineer and a repair drawing was being done for that also.

During the month of June I also contacted the Building Inspection office about the truss modifications and other items we were concerned about. Mr. Kindervator assured me that the padding up of the trusses met code but when asked to put it in writing he would not. When I met with Mr. Kindervator on June 22, 2016, I showed him the repair drawing that Finer had given us that was stamped by James Fletcher and expressed my concerns about it being a valid drawing. He said as long as it was stamped by an engineer it could be written on a scrap of paper and it would be valid. I emailed the picture of the padded up trusses to the state building inspection office and I was told that there was not a prescriptive practice for this method of construction but a performance standard that had to be met using an analysis of loads and stresses. When I emailed this to Mr. Kindervater he then included the padding up of the trusses in the Letter of Defect that the Department of Building Inspections sent Finer Homes on August 3rd. I assumed that since he had seen the drawing and still included the item as a defect that he also did not think it was valid.

Finer Homes did not seem to take the Letter of Defect very seriously as they did not fix but two items listed in the Letter of Defect in the thirty day period. Also, while fixing, replacing the bathtub, they created two more violations by cutting completely through an I joist and cutting a 6 x 14 hole under our tub. I emailed Mr. Kindervator and asked if a Letter of Violation had been sent to Finer Homes since they had not complied within the 30 days. I also reminded him that by law, building inspections had to issue the letter and not take "an informal approach". He said that the Letter of Violation would be issued and also a Letter of Defect for the new code violations. In the Letter of Violation the padding up of the trusses was listed as resolved because the department of building inspections now had the "repair" drawing by Mr. Fletcher and the Building Official, Mr. Witt had said it was acceptable. I met with Chesterfield County's assistant county administrator two weeks ago regarding this issue and I am appealing the Building Officials decision.

I have attached the truss design drawings, the truss layout, the repair drawing for the HVAC platform done by Frank Lassiter, and e-mails between myself and the building inspectors and county administrators.

A building permit was obtained by Finer Homes using the attached truss drawings. Finer Homes did not submit amended truss drawings stamped by an engineer or Registered Design Professional when they deviated from the original truss drawings. The first Letter of Defect does include the padding up of the trusses as a defect and I firmly believe that I will win the appeal regarding the decision of the Building Official to accept Mr. Fletcher's drawing.

It is my understanding from reading the documentation from DPOR regarding the ethical standards of PE's that at the very least Mr. Fletcher has not complied with the format in which a drawing should have, which would include a cover page with contact information. His drawing is not verifiable. Also, the documentation on the DPOR website says that when the original engineer that created the drawings is available then he/she would be the correct person to issue the repair.

Thank you for your time and consideration.

Respectfully,

Leah Thorpe

---

6 attachments

ORIGINAL TRUSS DRAWINGS-THORPE.pdf
11508K

LETTERS OF DEFECT AND NOTICE OF VIOLATION.pdf
2000K

EMAILS TO BUILDING INSPECTORS.pdf
5096K

TRUSS LAYOUT-THORPE.pdf
293K

E-MAIL WITH COUNTY DEPUTY COUNTY ADMINISTRATOR.pdf
2160K

HVAC PLATFORM REPAIR BY LASSITER.pdf
925K

Governmental email is generally subject to disclosure pursuant to the Virginia Freedom of Information Act. However, if you have received this message in error, please notify the Sender and delete the message as well as all attachments.

From: Leah Thorpe [mailto:leahbthorpe@gmail.com]
Sent: Friday, October 21, 2016 4:53 PM
To: DPOR: Complaint Analysis (DPOR)
Subject: File No. 2017-00867

Dear Ms. Muniec:

I have attached more documents for your review. Thank you.

Leah Thorpe

Truss Packet on site

Job	Truss	Truss Type	Qty	Ply	SAVANNAH W/ ROG & PART ATTIC
RT13826	T-1VX	COMMON	6	1	

Job Reference (optional)

Structural Technologies, Doswell, VA 23047

Run: 7.600 s Oct 3 2014 Print: 7.600 s Oct 3 2014 MiTek Industries, Inc. Tue Mar 24 19:22:04 2015 Page 1
ID:hNjBGyXDZHd0w6QHrgvER7yOsfP-dS47c9E7xHTJOS3gcG08wojf4cfsqsfTBrc3u6zXeTX

-1-0-0	8-7-12	14-5-10	21-0-0	28-4-12	34-11-9	42-0-0
1-0-0	8-7-12	5-9-14	6-6-6	7-4-12	6-6-13	7-0-7

Scale = 1:78.3

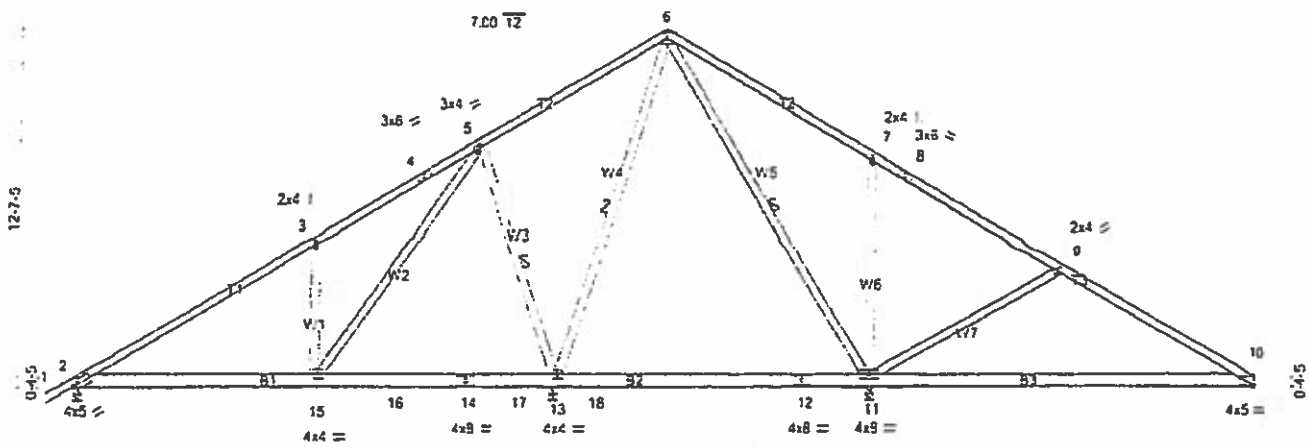

8-7-12	17-1-4	28-4-12	42-0-0
8-7-12	8-5-8	11-3-8	13-7-4

Plate Offsets (X,Y)-- [2:0-3-3,0-1-14], [10:0-1-4,0-0-3]

LOADING (psf)		SPACING-	2-0-0	CSI.		DEFL.	in	(loc)	l/defl	L/d	PLATES	GRIP
TCLL	20.0	Plate Grip DOL	1.15	TC	0.76	Vert(LL)	-0.36	10-11	>448	240	MT20	244/190
TCDL	10.0	Lumber DOL	1.15	BC	0.69	Vert(TL)	-0.67	10-11	>242	180		
BCLL	0.0 *	Rep Stress Incr	YES	WB	0.54	Horz(TL)	0.01	10	n/a	n/a		
BCDL	10.0	Code IRC2009/TPI2007		(Matrix)							Weight: 268 lb	FT = 5%

LUMBER-
TOP CHORD 2x4 SP No.2
BOT CHORD 2x6 SP No.2 *Except*
B3: 2x6 SP No.1D
WEBS 2x4 SP No.3

BRACING-
TOP CHORD Structural wood sheathing directly applied or 5-2-7 oc purlins
BOT CHORD Rigid ceiling directly applied or 6-0-0 oc bracing. Except:
10-0-0 oc bracing: 2-15.
WEBS 1 Row at midpt 5-13, 6-13, 6-11

MiTek recommends that Stabilizers and required cross bracing be installed during truss erection, in accordance with Stabilizer Installation guide.

REACTIONS. All bearings 0-3-8 except (jt=length) 2=0-4-0, 10=Mechanical.
(lb) - Max Horz 2=293(LC 5)
Max Uplift All uplift 100 lb or less at joint(s) 2, 10 except 13=-215(LC 6), 11=-235(LC 7)
Max Grav All reactions 250 lb or less at joint(s) except 2=620(LC 10), 13=1657(LC 1), 11=1250(LC 11), 10=397(LC 11)

FORCES. (lb) - Max. Comp./Max. Ten. - All forces 250 (lb) or less except when shown.
TOP CHORD 2-3=-653/68, 3-4=-613/165, 4-5=-455/197, 5-6=-42/402, 6-7=-1/324, 7-8=-36/327, 9-10=-343/58
BOT CHORD 2-15=-137/448
WEBS 3-15=-435/211, 5-15=-219/877, 5-13=-703/256, 6-13=-539/34, 7-11=-458/225, 9-11=-412/189

NOTES-
1) Unbalanced roof live loads have been considered for this design.
2) Wind: ASCE 7-05; 90mph; TCDL=6.0psf; BCDL=3.0psf; h=25ft; Cat. II; Exp B; enclosed; MWFRS (low-rise) gable end zone and C-C Exterior(2) zone; cantilever left and right exposed ; end vertical left and right exposed;C-C for members and forces & MWFRS for reactions shown; Lumber DOL=1.15 plate grip DOL=1.15
3) This truss has been designed for a 20.0 psf bottom chord live load nonconcurrent with any other live loads.
4) * This truss has been designed for a live load of 20.0psf on the bottom chord in all areas where a rectangle 3-6-0 tall by 2-0-0 wide will fit between the bottom chord and any other members, with BCDL = 10.0psf.
5) Refer to girder(s) for truss to truss connections.
6) Provide mechanical connection (by others) of truss to bearing plate capable of withstanding 100 lb uplift at joint(s) 2, 10 except (jt=lb) 13=215, 11=235.
7) This truss is designed in accordance with the 2009 International Residential Code sections R502.11.1 and R802.10.2 and referenced standard ANSI/TPI 1.
8) "Semi-rigid pitchbreaks with fixed heels" Member end fixity model was used in the analysis and design of this truss.

LOAD CASE(S) Standard

Truss packet filed with county

Job	Truss	Truss Type	Qty	Ply	SAVANNAH W ROG & PART ATTIC
25917	T-IVX	COMMON	5	1	Job Reference (optional)

Structural Technologies, Dotwell, VA 23047

7.610 s Jan 16 2015 MiTek Industries, Inc. Fri Mar 20 15:15:08 2015 Page 1

ID:hNjBGyXDZHdOw60HrgvER7yOsfP-sVYNLWZ95P7FuZVMFXJS3wtmBXXVRGXuw_5pzZDTO

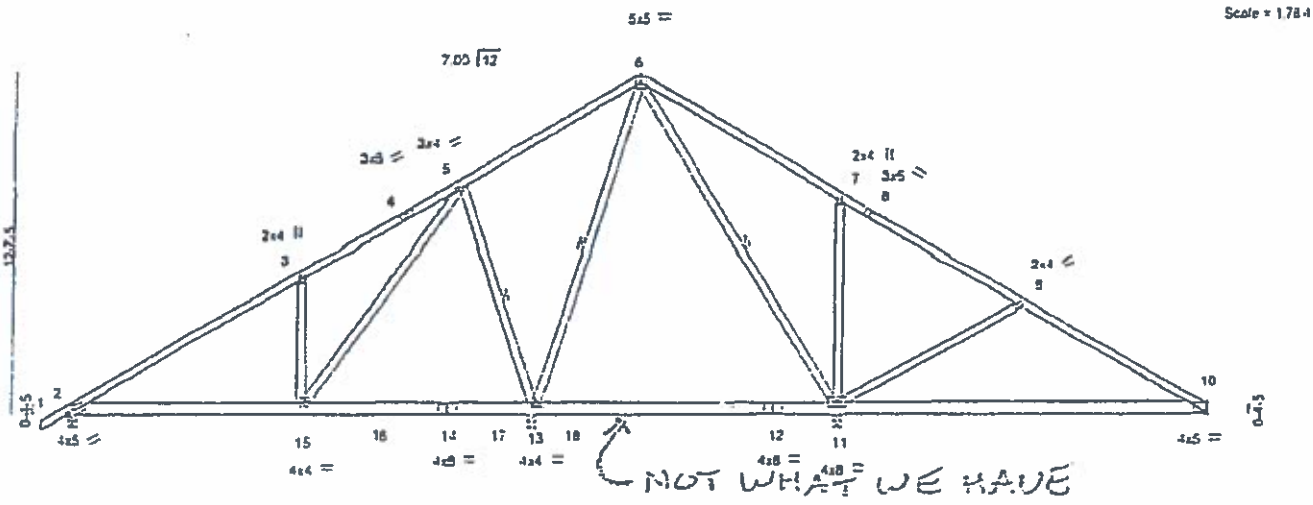

Plate Offsets (X,Y)-- [2:0-3-3,0-1-14], [10:0-1-4,0-0-3]

LOADING (psf)		SPACING- 2-0-0		CSI.		DEFL.	in	(loc)	l/defl	L/d	PLATES	GRIP
TCLL	20.0	Plate Grip DOL	1.15	TC	0.76	Vert(LL)	-0.36	10-11	>448	240	MT20	244/190
TCDL	10.0	Lumber DOL	1.15	BC	0.69	Vert(TL)	-0.67	10-11	>242	180		
BCLL	0.0 *	Rep Stress Incr	YES	WB	0.54	Horz(TL)	0.01	10	n/a	n/a		
BCDL	10.0	Code IRC2009/TPI2007		(Matrix)							Weight: 268 lb	FT = 5%

LUMBER-
TOP CHORD 2x4 SP No.2
BOT CHORD 2x6 SP No.2 *Except*
10-12: 2x6 SP No.10
WEBS 2x4 SP No.3

BRACING-
TOP CHORD Structural wood sheathing directly applied or 5-2-7 oc purlins.
BOT CHORD Rigid ceiling directly applied or 6-0-0 oc bracing. Except:
10-0-0 oc bracing: 2-15.
WEBS 1 Row at midpt 5-13, 6-13, 6-11

MiTek recommends that Stabilizers and required cross bracing be installed during truss erection, in accordance with Stabilizer Installation guide.

REACTIONS (lb/size) 2=615/0-4-0 (min. 0-1-8), 13=1657/0-3-8 (min. 0-1-15), 11=1248/0-3-8 (min. 0-1-8), 10=366/Mechanical
Max Horz 2=293(LC 5)
Max Uplift 2=-81(LC 6), 13=-215(LC 6), 11=-235(LC 7), 10=-21(LC 7)
Max Grav 2=620(LC 10), 13=1657(LC 1), 11=1250(LC 11), 10=397(LC 11)

FORCES. (lb) - Maximum Compression/Maximum Tension
TOP CHORD ~~1-2=-633, 2-3=-653/68, 3-5=-613/197, 5-6=-424/402, 6-7=-1/324, 7-9=-73/327, 9-10=-343/58~~
BOT CHORD 2-15=-137/448, 13-15=-94/191, 11-13=-137/233, 10-11=-14/214
WEBS 3-15=-435/211, 5-15=-219/877, 5-13=-703/256, 6-13=-539/34, 6-11=-170/0, 7-11=-458/225, 9-11=-412/189

NOTES-
1) Unbalanced roof live loads have been considered for this design.
2) Wind: ASCE 7-05; 90mph; TCDL=6.0psf; BCDL=3.0psf; h=25ft; Cat. II; Exp B; enclosed; MWFRS (low-rise) gable end zone and C-C Exterior(2) zone; cantilever left and right exposed ; end vertical left and right exposed;C-C for members and forces & MWFRS for reactions shown; Lumber DOL=1.15 plate grip DOL=1.15
3) This truss has been designed for a 20.0 psf bottom chord live load nonconcurrent with any other live loads.
4) * This truss has been designed for a live load of 20.0psf on the bottom chord in all areas where a rectangle 3-6-0 tall by 2-0-0 wide will fit between the bottom chord and any other members, with BCDL = 10.0psf.
5) Refer to girder(s) for truss to truss connections.
6) Provide mechanical connection (by others) of truss to bearing plate capable of withstanding 81 lb uplift at joint 2, 215 lb uplift at joint 13, 235 lb uplift at joint 11 and 21 lb uplift at joint 10.
7) "Semi-rigid pitchbreaks with fixed heels" Member end fixity model was used in the analysis and design of this truss.

COMMONWEALTH OF VIRGINIA
FRANK R. LASSITER
Lic. No. 034728
PROFESSIONAL ENGINEER

March 20,2015

WARNING - Verify design parameters and READ NOTES ON THIS AND INCLUDED MiTEK REFERENCE PAGE MII-7473 rev. 3/29/2012 BEFORE USE
Design valid for use only with MiTek connectors. This design is based only upon parameters shown, and is for an individual building component. Applicability of design parameters and proper incorporation of component is responsibility of building designer - not truss designer. Bracing shown is for lateral support of individual web members only. Additional temporary bracing to insure stability during construction is the responsibility of the erector. Additional permanent bracing of the overall structure is the responsibility of the building designer. For general guidance regarding fabrication, quality control, storage, delivery, erection and bracing, consult ANSI/TPI1 Quality Criteria, DSB-89 and BCSI Building Component Safety Information, available from Truss Plate Institute, 281 N. Lee Street, Suite 312, Alexandria, VA 22314.
If Southern Pine (SP) lumber is specified, the design values are those effective 06/01/2013 by ALSC

ENGINEERED BY
TRENCO
818 Soundside Road
Edenton, NC 27932

PDF before James Hetcher produced drawing

Job	Truss	Truss Type	Qty	Ply	SAVANNAH W/ ROG & PART ATTIC
25917	T-1VX	COMMON	6	1	Job Reference (optional)

Structural Technologies, Doswell, VA 23047

Run: 7.600 s Oct 3 2014 Print: 7.600 s Oct 3 2014 MiTek Industries, Inc. Fri Mar 20 14:56:55 2015 Page 1
ID:hNjBGyXDZHd0w6QHrgvER7yQsIP-F7B1R4QBnclPWOfiq6UA0McLs89bAfRVKgu63OzZ0k6

-1-0-0	8-7-12	14-5-10	21-0-0	28-4-12	34-11-9	42-0-0
1-0-0	8-7-12	5-9-14	6-6-6	7-4-12	6-6-13	7-0-7

Scale = 1:77.3

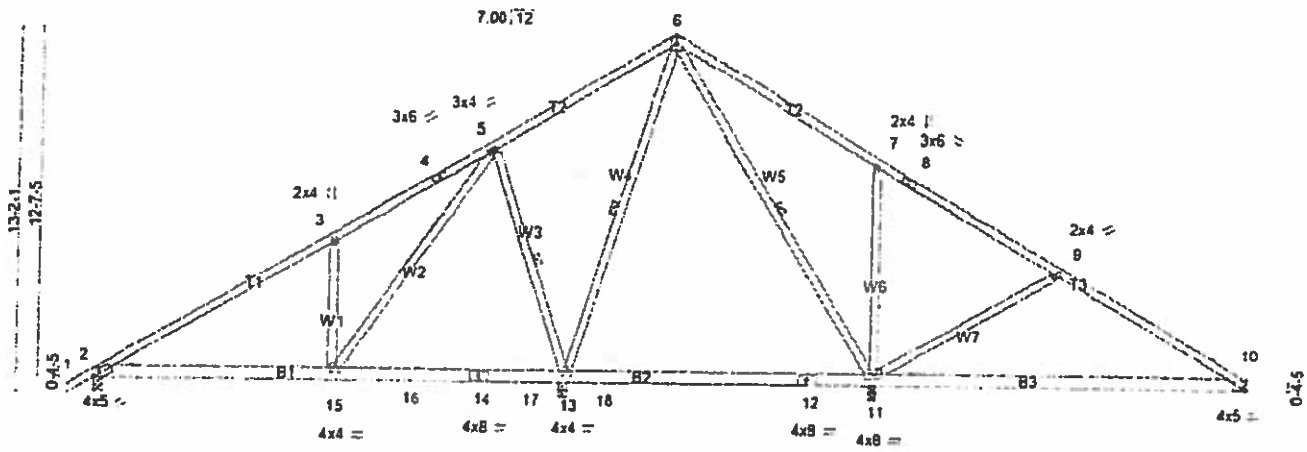

8-7-12	17-1-4	28-4-12	42-0-0
8-7-12	8-5-8	11-3-8	13-7-4

Plate Offsets (X,Y)-- [2:0-3-3,0-1-14], [10:0-1-4,0-0-3]

LOADING (psf)		SPACING-	2-0-0	CSI.		DEFL.	in	(loc)	l/defl	L/d	PLATES	GRIP
TCLL	20.0	Plate Grip DOL	1.15	TC	0.76	Vert(LL)	-0.36	10-11	>448	240	MT20	244/190
TCDL	10.0	Lumber DOL	1.15	BC	0.69	Vert(TL)	-0.67	10-11	>242	180		
BCLL	0.0 *	Rep Stress Incr	YES	WB	0.54	Horz(TL)	0.01	10	n/a	n/a		
BCDL	10.0	Code IRC2009/TPI2007		(Matrix)							Weight: 268 lb	FT = 5%

LUMBER-
TOP CHORD 2x4 SP No.2
BOT CHORD 2x6 SP No.2 *Except* B3: 2x6 SP No.1D
WEBS 2x4 SP No.3

STACH (1) 2X6 ATOP BOTTOM CHORD AS SHOWN. ATTACH W/ 2X4 X 11" BLOCKS SET 36" OC ONE FACE. USE (4) 16D BOX NAILS EACH MEMBER EACH CONNECTION.

BRACING-
TOP CHORD Structural wood sheathing directly applied or 5-2-7 oc purlins.
BOT CHORD Rigid ceiling directly applied or 6-0-0 oc bracing. Except: 10-0-0 oc bracing: 2-15.
WEBS 1 Row at midpt 5-13, 6-13, 6-11

MiTek recommends that Stabilizers and required cross bracing be installed during truss erection, in accordance with Stabilizer Installation guide.

REACTIONS. (lb/size) 2=615/0-4-0, 13=1657/0-3-8, 11=1248/0-3-8, 10=366/Mechanical
Max Horz 2=293(LC 5)
Max Uplift2=-81(LC 6), 13=-215(LC 6), 11=-235(LC 7), 10=-21(LC 7)
Max Grav 2=620(LC 10), 13=1657(LC 1), 11=1250(LC 11), 10=397(LC 11)

REPAIR

FORCES. (lb) - Maximum Compression/Maximum Tension
TOP CHORD 1-2=0/33, 2-3=-653/68, 3-4=-613/165, 4-5=-455/197, 5-6=-42/402, 6-7=-1/324, 7-8=-36/327, 8-9=-73/144, 9-10=-343/58
BOT CHORD 2-15=-137/448, 15-16=-94/191, 14-16=-94/191, 14-17=-94/191, 13-17=-94/191, 13-18=-137/233, 12-18=-137/233, 11-12=-137/233, 10-11=-14/214
WEBS 3-15=-435/211, 5-15=-219/877, 5-13=-703/256, 6-13=-539/34, 6-11=-170/0, 7-11=-458/225, 9-11=-412/189

June 16, 2016

NOTES-
1) Unbalanced roof live loads have been considered for this design.
2) Wind: ASCE 7-05; 90mph; TCDL=6.0psf; BCDL=3.0psf; h=25ft; Cat. II; Exp B; enclosed; MWFRS (low-rise) gable end zone and C-C Exterior(2) zone; cantilever left and right exposed ; end vertical left and right exposed;C-C for members and forces & MWFRS for reactions shown; Lumber DOL=1.15 plate grip DOL=1.15
3) This truss has been designed for a 20.0 psf bottom chord live load nonconcurrent with any other live loads.
4) * This truss has been designed for a live load of 20.0psf on the bottom chord in all areas where a rectangle 3-6-0 tall by 2-0-0 wide will fit between the bottom chord and any other members, with BCDL = 10.0psf.
5) Refer to girder(s) for truss to truss connections.
6) Provide mechanical connection (by others) of truss to bearing plate capable of withstanding 81 lb uplift at joint 2, 215 lb uplift at joint 13, 235 lb uplift at joint 11 and 21 lb uplift at joint 10.
7) This truss is designed in accordance with the 2009 International Residential Code sections R502.11.1 and R802.10.2 and referenced standard ANSI/TPI 1.
8) "Semi-rigid pitchbreaks with fixed heels" Member end fixity model was used in the analysis and design of this truss.

LOAD CASE(S) Standard

PDF from James Fletcher

Job	Truss	Truss Type	Qty	Ply	SAVANNAH W/ ROG & PART ATTIC
25917	T-1VX	COMMON	6	1	

Structural Technologies, Doswell, VA 23047

Job Reference (optional)

Run: 7.600 s Oct 3 2014 Print: 7.600 s Oct 3 2014 MiTek Industries, Inc. Fri Mar 20 14:56:55 2015 Page 1
ID:hNBGyXDZHd0w6OHrgvER7yOsfP-F7B1R4QBncPWOfiq6UADMcLs89bAfRVKgu63DzZ0k6

1-0-0	8-7-12	14-5-10	21-0-0	28-4-12	34-11-9	42-0-0
1-0-0	8-7-12	5-9-14	6-6-6	7-4-12	6-6-13	7-0-7

Scale = 1:77.3

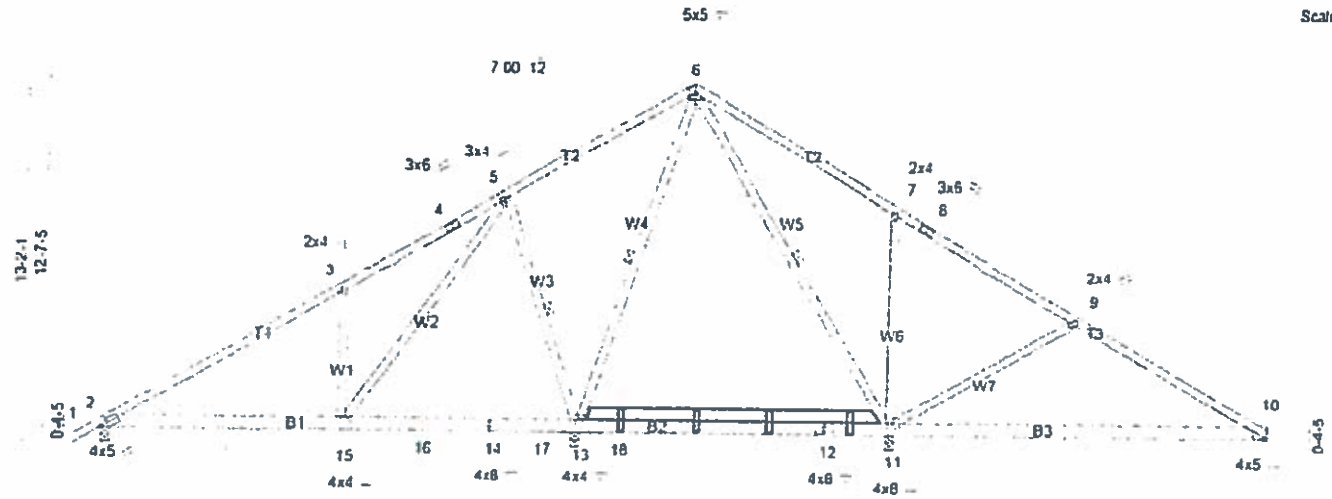

8-7-12	17-1-4	28-4-12	42-0-0
8-7-12	8-5-8	11-3-8	13-7-4

Plate Offsets (X,Y)-- [2:0-3-3,0-1-14], [10:0-1-4,0-0-3]

LOADING (psf)		SPACING-	2-0-0	CSI.		DEFL.	in	(loc)	l/defl	L/d	PLATES	GRIP
TCLL	20.0	Plate Grip DOL	1.15	TC	0.76	Vert(LL)	-0.36	10-11	>448	240	MT20	244/190
TCDL	10.0	Lumber DOL	1.15	BC	0.69	Vert(TL)	-0.67	10-11	>242	180		
BCLL	0.0 *	Rep Stress Incr	YES	WB	0.54	Horz(TL)	0.01	10	n/a	n/a		
BCDL	10.0	Code IRC2009/TPI2007		(Matrix)							Weight: 268 lb	FT = 5%

LUMBER-
TOP CHORD 2x4 SP No.2
BOT CHORD 2x6 SP No.2 *Except* B3: 2x6 SP No.1D
WEBS 2x4 SP No.3

STACH (1) 2X6 ATOP BOTTOM CHORD AS SHOWN. ATTACH W/ 2X4 X 11" BLOCKS SET 36" OC ONE FACE. USE (4) 16D BOX NAILS EACH MEMBER EACH CONNECTION.

BRACING-
TOP CHORD Structural wood sheathing directly applied or 5-2-7 oc purlins
BOT CHORD Rigid ceiling directly applied or 6-0-0 oc bracing. Except:
10-0-0 oc bracing: 2-15
WEBS 1 Row at midpt 5-13, 6-13, 6-11

MiTek recommends that Stabilizers and required cross bracing be installed during truss erection, in accordance with Stabilizer Installation guide.

REACTIONS. (lb/size) 2=615/0-4-0, 13=1657/0-3-8, 11=1248/0-3-8, 10=366/Mechanical
Max Horz 2=293(LC 5)
Max Uplift 2=-81(LC 6), 13=-215(LC 6), 11=-235(LC 7), 10=-21(LC 7)
Max Grav 2=620(LC 10), 13=1657(LC 1), 11=1250(LC 11), 10=397(LC 11)

FORCES. (lb) - Maximum Compression/Maximum Tension
TOP CHORD 1-2=0/33, 2-3=-653/68, 3-4=-813/165, 4-5=-455/197, 5-6=-42/402, 6-7=-1/324, 7-8=-36/327, 8-9=-73/144, 9-10=-343/58
BOT CHORD 2-15=-137/448, 15-16=-94/191, 14-16=-94/191, 14-17=-94/191, 13-17=-94/191, 13-18=-137/233, 12-18=-137/233, 11-12=-137/233, 10-11=-14/214
WEBS 3-15=-435/211, 5-15=-219/877, 5-13=-703/256, 6-13=-539/34, 6-11=-170/0, 7-11=-458/225, 9-11=-412/189

NOTES-
1) Unbalanced roof live loads have been considered for this design.
2) Wind: ASCE 7-05; 90mph; TCDL=6.0psf; BCDL=3.0psf; h=25ft; Cat. II; Exp B; enclosed; MWFRS (low-rise) gable end zone and C-C Exterior(2) zone; cantilever left and right exposed ; end vertical left and right exposed;C-C for members and forces & MWFRS for reactions shown; Lumber DOL=1.15 plate grip DOL=1.15
3) This truss has been designed for a 20.0 psf bottom chord live load nonconcurrent with any other live loads.
4) * This truss has been designed for a live load of 20.0psf on the bottom chord in all areas where a rectangle 3-6-0 tall by 2-0-0 wide will fit between the bottom chord and any other members, with BCDL = 10.0psf.
5) Refer to girder(s) for truss to truss connections.
6) Provide mechanical connection (by others) of truss to bearing plate capable of withstanding 81 lb uplift at joint 2, 215 lb uplift at joint 13, 235 lb uplift at joint 11 and 21 lb uplift at joint 10.
7) This truss is designed in accordance with the 2009 International Residential Code sections R502.11.1 and R802.10.2 and referenced standard ANSI/TPI 1.
8) "Semi-rigid pitchbreaks with fixed heels" Member end fixity model was used in the analysis and design of this truss.

LOAD CASE(S) Standard

COMMONWEALTH OF VIRGINIA
REPAIR
JAMES H. FLETCHER
June 16, 2016
No. 26629
PROFESSIONAL ENGINEER

Job	Truss	Truss Type	Qty	Ply	SAVANNAH W/ ROG & PART ATTIC
25917	T-1VX	COMMON	6	1	Job Reference (optional)

Structural Technologies, Dunwoody, GA 30338

Run: 7.630 s Oct 3 2014 Print: 7.600 s Oct 3 2014 MiTek Industries, Inc. Fri Mar 18 14:25:25 2016 Page 1

ID:NBGwKDZHdDv4Q3HpERJyCdP-F7B1R1OBmdPWOTcSUAONdJaObARVKzJ8OCZnA8

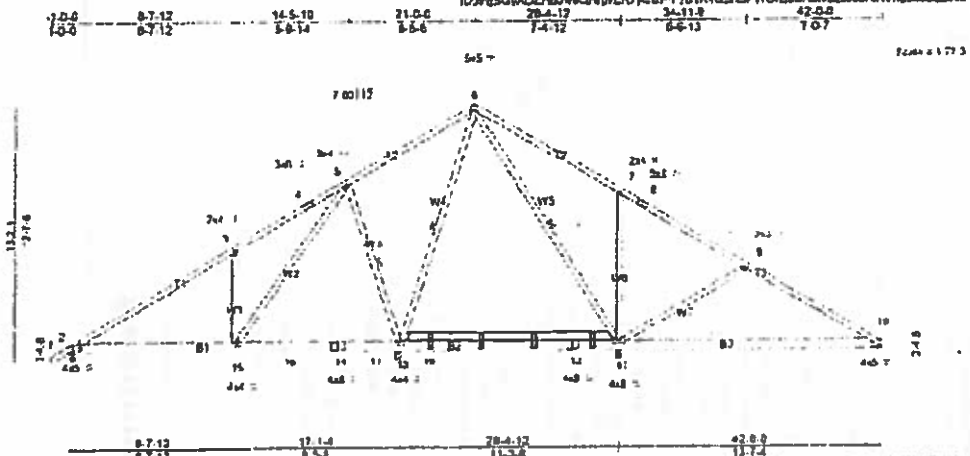

LOADING (psf)		SPACING-	2-0-0	CSI.		DEFL.	in	(loc)	l/def	L/d	PLATES	GRIP
TCLL	20.0	Plate Grip DOL	1.15	TC	0.76	Vert(LL)	-0.36	10-11	>448	240	MT20	244/190
TCDL	10.0	Lumber DOL	1.15	BC	0.69	Vert(TL)	0.67	10-11	>242	180		
BCLL	0.0 *	Rep Stress Incr	YES	WB	0.54	Horz(TL)	0.01	10	n/a	n/a		
BCDL	10.0	Code IRC2009/TPI2007		(Matrix)							Weight: 258 lb	FT = 5%

LUMBER-
TOP CHORD 2x4 SP No.2
BOT CHORD 2x6 SP No.2 *Except* B2: 2x6 SP No.1D
WEBS 2x4 SP No.3

STACK (1) 2X4 ATOP BOTTOM CHORD AS SHOWN. ATTACH W/ 2X4 X 11" BLOCKS SET 24" OC ONE FACE. USE (4) 16D BOX NAILS EACH MEMBER EACH CONNECTION.

BRACING-
TOP CHORD Structural wood sheathing directly applied or 5-2-7 oc purlins.
BOT CHORD Rigid ceiling directly applied or 9-0-0 oc bracing. Except: 10-0-0 oc bracing: 2-15.
WEBS 1 Row at midpt 5-13, 6-13, 6-11

MiTek recommends that Stabilizers and required cross bracing be installed during truss erection, in accordance with Stabilizer Installation guide.

REACTIONS (lb/size) 2=0/90-4-0, 13=1657/0-3-8, 11=1246/0-3-8, 10=398/Mechanical
Max Horz 2=293(LC 5)
Max Uplift 2=-81(LC 6), 13=-215(LC 6), 11=-235(LC 7), 10=-24(LC 7)
Max Grav 2=420(LC 10), 13=1657(LC 1), 11=1246(LC 11), 10=397(LC 11)

FORCES. (lb) - Maximum Compression/Maximum Tension
TOP CHORD 1-2=0/33, 2-3=-453/48, 3-4=-613/102, 4-5=-433/197, 5-6=-42/432, 6-7=-1/324, 7-8=-36/327, 8-9=-73/144, 9-10=-343/58
BOT CHORD 3-15=-137/448, 15-18=-84/191, 14-18=-84/191, 14-17=-84/191, 13-17=-84/191, 13-18=-137/253, 12-18=-137/253, 11-12=-117/233, 10-11=-14/214
WEBS 3-15=-432/211, 5-13=-219/877, 5-12=-705/236, 6-12=-239/34, 6-11=-170/0, 7-11=-458/223, 9-11=-412/189

NOTES-
1) Unbalanced roof live loads have been considered for this design.

COMMONWEALTH OF VIRGINIA
REPAIR
JAMES H. FLETCHER
June 16, 2016
No. 25620

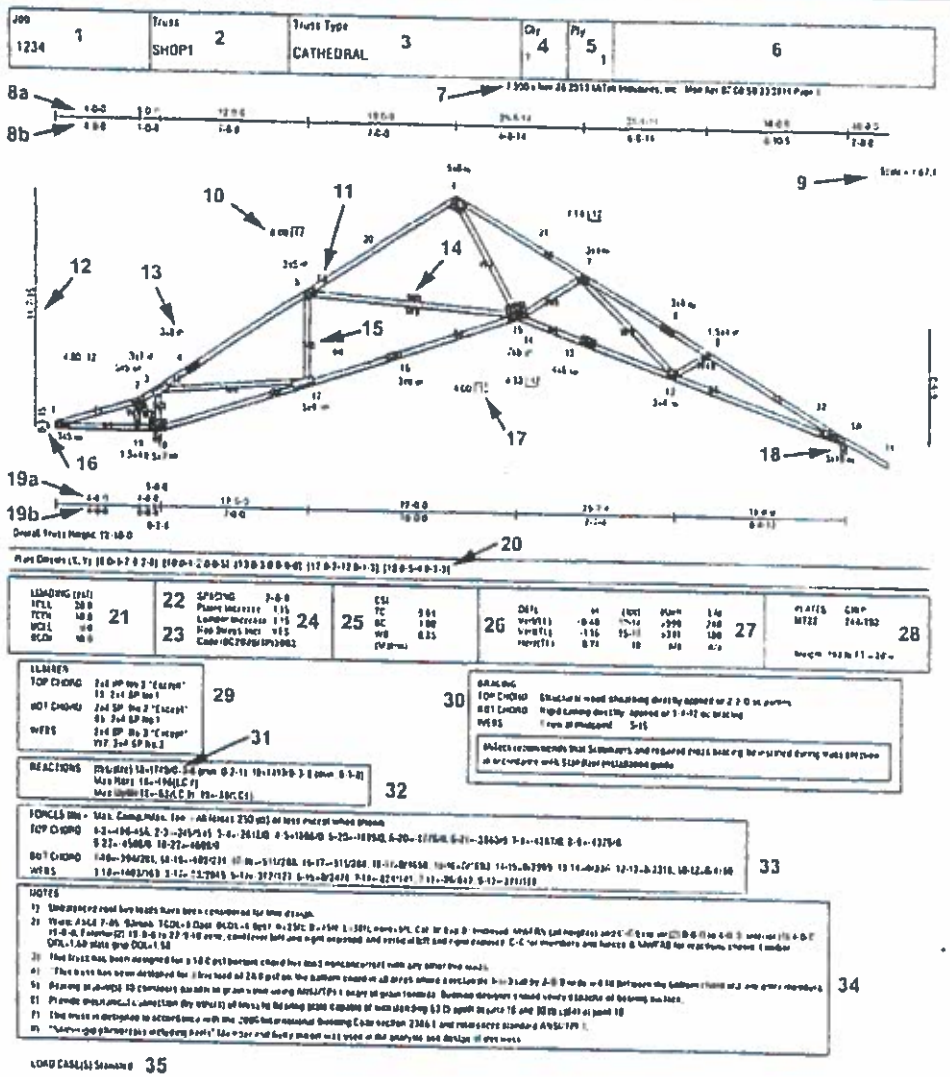

Reading a MiTek Engineering Drawing

1 Job name
2 Truss label
3 Truss type
4 Truss quantity
5 Number of plies
6 Job description
7 Software version
8a Cumulated dimensions of top chord – panel lengths are added together along the top chord of truss (feet-inches-sixteenths)
8b Panel lengths of the top chord – each section represents the horizontal distance between the centerline of two consecutive panel points along the top chord (feet-inches-sixteenths)
9 Drawing scale of the truss
10 Top chord slope – inches of vertical rise for each 12 inches of horizontal run
11 Top chord member label (if shown) – identification label used to distinguish pieces
12 Truss height – the height of the truss from the top of the bearing to the top of the top chord (trusses with multiple levels of top chord will have multiple truss height dimensions) (feet-inches-sixteenths)
13 Plate size, orientation and type – plate size in inches. The two lines denotes the direction of the plate
14 Continuous lateral bracing location
15 Web member label (if shown)
16 Heel height – the height from the top of bearing to the top of the top chord at the outside edge of the bearing (feet-inches-sixteenths)
17 Bottom chord slope – inches of vertical rise for each 12 inches of horizontal run
18 Bearing – a structural support, usually a wall or beam that is designated to carry the truss reaction loads to the foundation
19a Cumulated dimensions of bottom chord – panel lengths are added together along the bottom chord of truss (feet-inches-sixteenths)
19b Panel lengths of the bottom chord – each section represents the horizontal distance between the centerline of two consecutive panel points along the bottom chord (feet-inches-sixteenths)
20 Plate offsets (X, Y) – this section lists any horizontal and/or vertical plate offsets (in inches) and the location they occur
21 Design loading (PSF–pounds per square foot)
22 Spacing on center – feet-inches-sixteenths
23 Design code / Design standard
24 Duration of Load for plate and lumber design and Repetitive Use Factor
25 CSI – maximum Combined Stress Index for top chords, bottom chords and webs
26 Deflection– maximum deflection expected in a member (inches), Location of maximum deflection, maximum Span to deflection ratio expected in a member
27 Span to deflection ratios – input allowables
28 MiTek plate allowables (PSI) / estimated truss weight / fabrication tolerance
29 Lumber requirements
30 Required bracing for all members
31 Reaction (pounds), Bearing size - input and minimum required (if shown)
32 Maximum Uplift and/or Maximum Horizontal Reaction if applicable and Maximum Gravity if shown
33 Maximum member forces - Tension (+), Compression (-)
34 Notes
35 Additional loads / load cases

MiTek

Truss Packet on site

Job	Truss	Truss Type	Qty	Ply	SAVANNAH W: ROG & PART ATTIC
RT13626	T-1VX	COMMON	6	1	Job Reference (optional)

Structural Technologies, Deswall, VA 23047

Run: 7.600 s Oct 3 2014 Print: 7.600 s Oct 3 2014 MiTek Industries, Inc. Tue Mar 24 19:22:04 2015 Page 1
ID:hNjBGyXDZHd0w6OHrgvER7yOsfP-dS47c9E?xHTJQS3gcG08wojf4cfscsTBrc3u6zXeTX

-1-0-0	8-7-12	14-5-10	21-0-0	28-4-12	34-11-9	42-0-0
1-0-0	8-7-12	5-9-14	6-6-6	7-4-12	6-6-13	7-0-7

Scale = 1:78.3

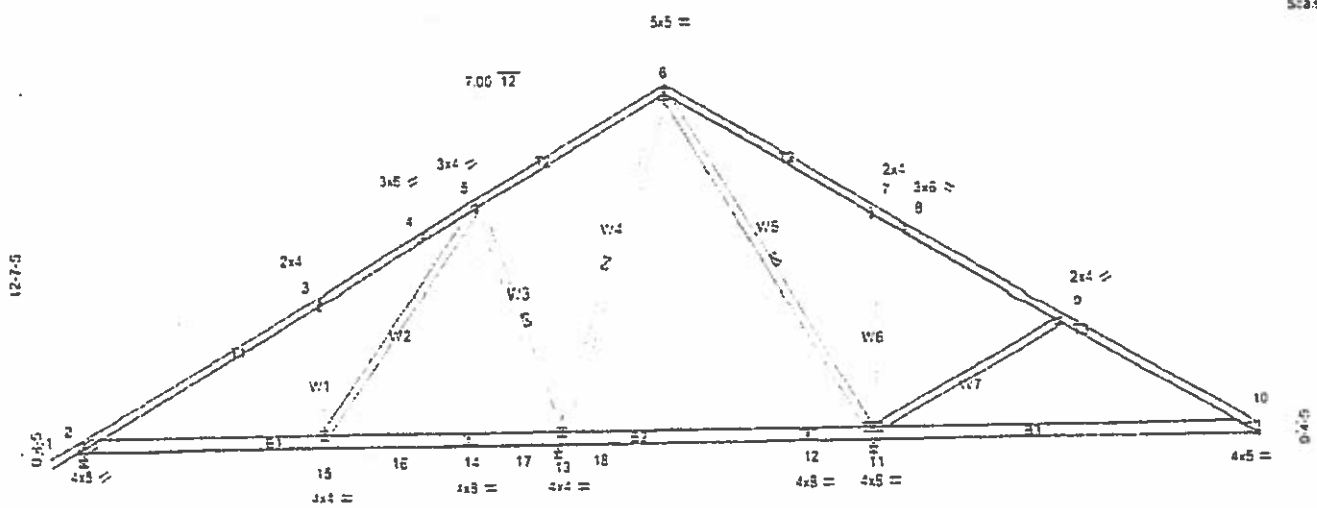

8-7-12	17-1-4	28-4-12	42-0-0
8-7-12	8-5-8	11-3-8	13-7-4

Plate Offsets (X,Y)-- [2:0-3-3,0-1-14], [10:0-1-4,0-0-3]

LOADING (psf)		SPACING-	2-0-0	CSI.		DEFL.	in	(loc)	l/defl	L/d	PLATES	GRIP
TCLL	20.0	Plate Grip DOL	1.15	TC	0.76	Vert(LL)	-0.35	10-11	>448	240	MT20	244/190
TCDL	10.0	Lumber DOL	1.15	BC	0.69	Vert(TL)	-0.67	10-11	>242	180		
BCLL	0.0 *	Rep Stress Incr	YES	WB	0.54	Horz(TL)	0.01	10	n/a	n/a		
BCDL	10.0	Code IRC2009/TPI2007		(Matrix)							Weight: 268 lb	FT = 5%

LUMBER-
TOP CHORD 2x4 SP No.2
BOT CHORD 2x6 SP No.2 *Except*
B3: 2x6 SP No.1D
WEBS 2x4 SP No.3

BRACING-
TOP CHORD Structural wood sheathing directly applied or 5-2-7 oc purlins.
BOT CHORD Rigid ceiling directly applied or 6-0-0 oc bracing. Except:
10-0-0 oc bracing: 2-15.
WEBS 1 Row at midpt 5-13, 6-13, 6-11

MiTek recommends that Stabilizers and required cross bracing be installed during truss erection, in accordance with Stabilizer Installation guide.

REACTIONS. All bearings 0-3-8 except (jt=length) 2=0-4-0, 10=Mechanical.
(lb) - Max Horz 2=293(LC 5)
Max Uplift All uplift 100 lb or less at joint(s) 2, 10 except 13=-215(LC 6), 11=-235(LC 7)
Max Grav All reactions 250 lb or less at joint(s) except 2=620(LC 10), 13=1657(LC 1), 11=1250(LC 11), 10=397(LC 11)

FORCES. (lb) - Max. Comp./Max. Ten. - All forces 250 (lb) or less except when shown.
TOP CHORD 2-3=-653/68, 3-4=-613/165, 4-5=-455/197, 5-6=-42/402, 6-7=-1/324, 7-8=-36/327, 9-10=-343/56
BOT CHORD 2-15=-137/448
WEBS 3-15=-435/211, 5-15=-219/877, 5-13=-703/256, 6-13=-539/34, 7-11=-458/225, 9-11=-412/189

NOTES-
1) Unbalanced roof live loads have been considered for this design.
2) Wind: ASCE 7-05; 90mph; TCDL=6.0psf; BCDL=3.0psf; h=25ft; Cat. II; Exp B; enclosed; MWFRS (low-rise) gable end zone and C-C Exterior(2) zone; cantilever left and right exposed ; end vertical left and right exposed;C-C for members and forces & MWFRS for reactions shown; Lumber DOL=1.15 plate grip DOL=1.15
3) This truss has been designed for a 20.0 psf bottom chord live load nonconcurrent with any other live loads.
4) * This truss has been designed for a live load of 20.0psf on the bottom chord in all areas where a rectangle 3-6-0 tall by 2-0-0 wide will fit between the bottom chord and any other members, with BCDL = 10.0psf.
5) Refer to girder(s) for truss to truss connections.
6) Provide mechanical connection (by others) of truss to bearing plate capable of withstanding 100 lb uplift at joint(s) 2, 10 except (jt=lb) 13=215, 11=235.
7) This truss is designed in accordance with the 2009 International Residential Code sections R502.11.1 and R802.10.2 and referenced standard ANSI/TPI 1.
8) "Semi-rigid pitchbreaks with fixed heels" Member end fixity model was used in the analysis and design of this truss.

LOAD CASE(S) Standard

Truss packet filed with county

Job	Truss	Truss Type	Qty	Ply	SAVANNAH W ROG & PART ATTIC	E6655551
25917	T-1VX	COMMON	5	1	Job Reference (optional)	

Structural Technologies, Cornwell, VA 23047

7.610 s Jan 16 2015 MiTek Industries, Inc. Fri Mar 20 13:15:03 2015 Page 1

ID:hNjBGyXOZHdowGOHrgvER7yOsfP-sVYhLWZ95P7FuZVFXjS3wkn8XXVRGXuw_SpzZ0TC

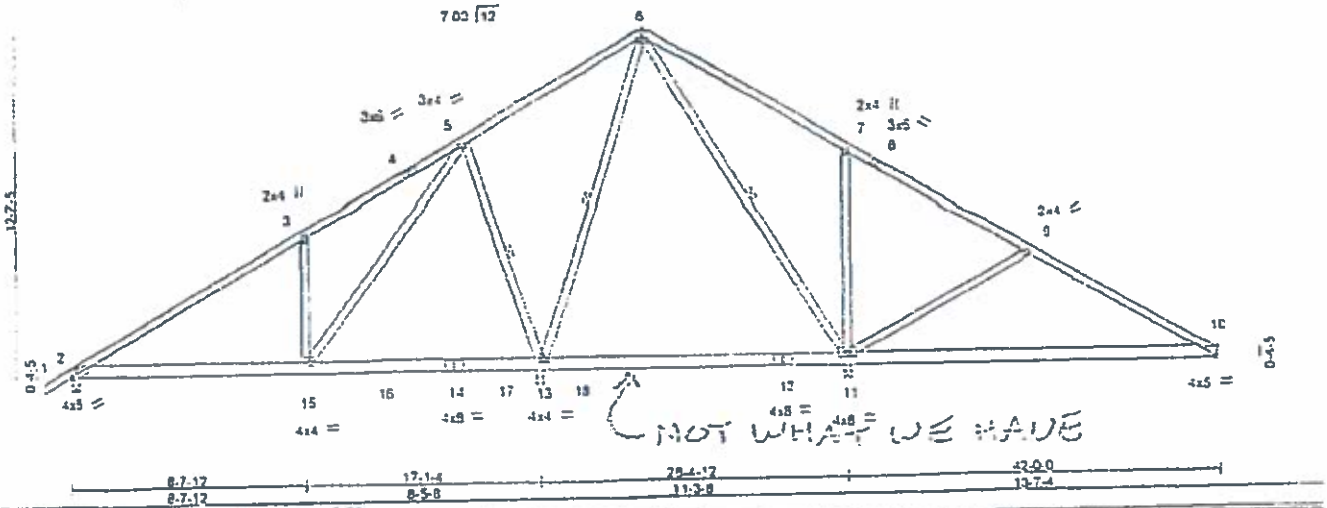

Plate Offsets (X,Y)-- [2:0-3-3,0-1-14], [10:0-1-4,0-0-3]

LOADING (psf)		SPACING-	2-0-0	CSI.		DEFL.	in	(loc)	l/defl	L/d	PLATES	GRIP
TCLL	20.0	Plate Grip DOL	1.15	TC	0.76	Vert(LL)	-0.36	10-11	>448	240	MT20	244/190
TCDL	10.0	Lumber DOL	1.15	BC	0.69	Vert(TL)	-0.67	10-11	>242	180		
BCLL	0.0 *	Rep Stress Incr	YES	WB	0.54	Horz(TL)	0.01	10	n/a	n/a		
BCDL	10.0	Code IRC2009/TPI2007		(Matrix)							Weight: 268 lb	FT = 5%

LUMBER-
TOP CHORD 2x4 SP No.2
BOT CHORD 2x6 SP No.2 *Except*
10-12: 2x6 SP No.1D
WEBS 2x4 SP No.3

BRACING-
TOP CHORD Structural wood sheathing directly applied or 5-2-7 oc purlins.
BOT CHORD Rigid ceiling directly applied or 6-0-0 oc bracing. Except:
10-0-0 oc bracing: 2-15.
WEBS 1 Row at midpt 5-13, 6-13, 6-11

MiTek recommends that Stabilizers and required cross bracing be installed during truss erection, in accordance with Stabilizer Installation guide.

REACTIONS. (lb/size) 2=615/0-4-0 (min. 0-1-8), 13=1657/0-3-8 (min. 0-1-15), 11=1248/0-3-8 (min. 0-1-8), 10=366/Mechanical
Max Horz 2=253(LC 5)
Max Uplift 2=-81(LC 6), 13=-215(LC 6), 11=-235(LC 7), 10=-21(LC 7)
Max Grav 2=620(LC 10), 13=1657(LC 1), 11=1250(LC 11), 10=397(LC 11)

FORCES. (lb) - Maximum Compression/Maximum Tension
TOP CHORD 1-2=0/33, 2-3=-653/68, 3-5=-613/197, 5-6=-42/402, 6-7=-1/324, 7-9=-73/327, 9-10=-343/58
BOT CHORD 2-15=-137/448, 13-15=-94/191, 11-13=-137/233, 10-11=-14/214
WEBS 3-15=-435/211, 5-15=-219/877, 5-13=-703/256, 6-13=-539/34, 6-11=-170/0, 7-11=-458/225, 9-11=-412/189

NOTES-
1) Unbalanced roof live loads have been considered for this design.
2) Wind: ASCE 7-05; 90mph; TCDL=6.0psf; BCDL=3.0psf; h=25ft; Cat. II; Exp B; enclosed; MWFRS (low-rise) gable end zone and C-C Exterior(2) zone; cantilever left and right exposed ; end vertical left and right exposed;C-C for members and forces & MWFRS for reactions shown; Lumber DOL=1.15 plate grip DOL=1.15
3) This truss has been designed for a 20.0 psf bottom chord live load nonconcurrent with any other live loads.
4) * This truss has been designed for a live load of 20.0psf on the bottom chord in all areas where a rectangle 3-6-0 tall by 2-0-0 wide will fit between the bottom chord and any other members, with BCDL = 10.0psf.
5) Refer to girder(s) for truss to truss connections.
6) Provide mechanical connection (by others) of truss to bearing plate capable of withstanding 81 lb uplift at joint 2, 215 lb uplift at joint 13, 235 lb uplift at joint 11 and 21 lb uplift at joint 10.
7) "Semi-rigid pitchbreaks with fixed heels" Member end fixity model was used in the analysis and design of this truss.

COMMONWEALTH OF VIRGINIA
FRANK R. LASSITER
Lic. No. 034728
PROFESSIONAL ENGINEER

March 20,2015

WARNING - Verify design parameters and READ NOTES ON THIS AND INCLUDED MiTek REFERENCE PAGE MII-7473 rev. 3/29/2014 BEFORE USE.
Design valid for use only with MiTek connectors. This design is based only upon parameters shown, and is for an individual building component. Applicability of design parameters and proper incorporation of component is responsibility of building designer - not truss designer. Bracing shown is for lateral support of individual web members only. Additional temporary bracing to insure stability during construction is the responsibility of the erector. Additional permanent bracing of the overall structure is the responsibility of the building designer. For general guidance regarding fabrication, quality control, storage, delivery, erection and bracing, consult ANSI/TPI1 Quality Criteria, DSB-89 and BCSI Building Component Safety Information, available from Truss Plate Institute, 583 D'Onofrio Drive, Madison, WI 53719. © 2013 by ALSC
If Southern Pine (SP) lumber is specified, the design values are those effective 06/01/2013 by ALSC

ENGINEERING BY TRENCO
818 Soundside Road
Edenton, NC 27932

PDF before James Hletcher produced drawing

Job	Truss	Truss Type	Qty	Ply	SAVANNAH W/ ROG & PART ATTIC
25917	T-1VX	COMMON	6	1	Job Reference (optional)

Structural Technologies, Doswell, VA 23047 — Run: 7.600 s Oct 3 2014 Print: 7.600 s Oct 3 2014 MiTek Industries, Inc. Fri Mar 20 14:56:55 2015 Page 1
ID:hNjBGyXDZHd0v6QHrgvER7yQsfP-F?B1R4QBncPWOfq8UA0McLs89bAfRVKgu83DzZ0k6

-1-0-0 | 8-7-12 | 14-5-10 | 21-0-0 | 28-4-12 | 34-11-9 | 42-0-0
1-0-0 | 8-7-12 | 5-9-14 | 6-6-6 | 7-4-12 | 6-6-13 | 7-0-7

Scale = 1:77.3

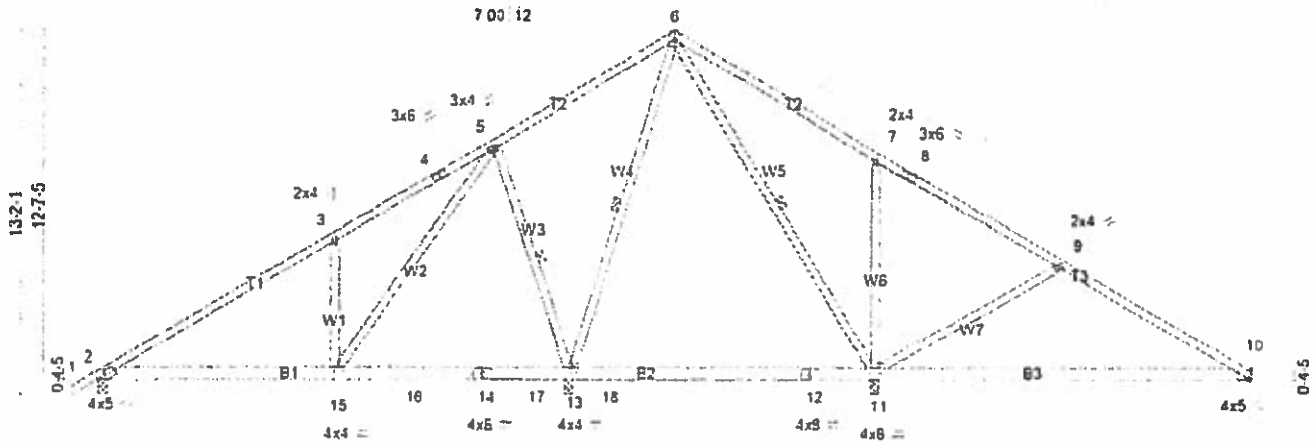

	8-7-12	17-1-4	28-4-12	42-0-0
	8-7-12	8-5-8	11-3-8	13-7-4

Plate Offsets (X,Y)-- [2:0-3-3,0-1-14], [10:0-1-4,0-0-3]

LOADING (psf)		SPACING-	2-0-0	CSI.		DEFL.	in	(loc)	l/defl	L/d	PLATES	GRIP
TCLL	20.0	Plate Grip DOL	1.15	TC	0.76	Vert(LL)	-0.36	10-11	>448	240	MT20	244/190
TCDL	10.0	Lumber DOL	1.15	BC	0.69	Vert(TL)	-0.67	10-11	>242	180		
BCLL	0.0 *	Rep Stress Incr	YES	WB	0.54	Horz(TL)	0.01	10	n/a	n/a		
BCDL	10.0	Code IRC2009/TPI2007		(Matrix)							Weight: 268 lb	FT = 5%

LUMBER-
TOP CHORD 2x4 SP No.2
BOT CHORD 2x6 SP No.2 *Except* B3: 2x6 SP No.1D
WEBS 2x4 SP No.3

STACH (1) 2X6 ATOP BOTTOM CHORD AS SHOWN. ATTACH W/ 2X4 X 11" BLOCKS SET 36" OC ONE FACE. USE (4) 16D BOX NAILS EACH MEMBER EACH CONNECTION.

BRACING-
TOP CHORD Structural wood sheathing directly applied or 5-2-7 oc purlins.
BOT CHORD Rigid ceiling directly applied or 6-0-0 oc bracing. Except 10-0-0 oc bracing: 2-15.
WEBS 1 Row at midpt 5-13, 6-13, 6-11

MiTek recommends that Stabilizers and required cross bracing be installed during truss erection, in accordance with Stabilizer Installation guide.

REACTIONS. (lb/size) 2=615/0-4-0, 13=1657/0-3-8, 11=1248/0-3-8, 10=366/Mechanical
Max Horz 2=293(LC 5)
Max Uplift 2=-81(LC 6), 13=-215(LC 6), 11=-235(LC 7), 10=-21(LC 7)
Max Grav 2=620(LC 10), 13=1657(LC 1), 11=1250(LC 11), 10=397(LC 11)

REPAIR

FORCES. (lb) - Maximum Compression/Maximum Tension
TOP CHORD 1-2=0/33, 2-3=-653/68, 3-4=-613/165, 4-5=-455/197, 5-6=-42/402, 6-7=-1/324, 7-8=-36/327, 8-9=-73/144, 9-10=-343/58
BOT CHORD 2-15=-137/448, 15-16=-94/191, 14-16=-94/191, 14-17=-94/191, 13-17=-94/191, 13-18=-137/233, 12-18=-137/233, 11-12=-137/233, 10-11=-14/214
WEBS 3-15=-435/211, 5-15=-219/877, 5-13=-703/256, 6-13=-539/34, 6-11=-170/0, 7-11=-458/225, 9-11=-412/189

June 16, 2016

NOTES-
1) Unbalanced roof live loads have been considered for this design.
2) Wind: ASCE 7-05; 90mph; TCDL=6.0psf; BCDL=3.0psf; h=25ft; Cat. II; Exp B; enclosed; MWFRS (low-rise) gable end zone and C-C Exterior(2) zone; cantilever left and right exposed ; end vertical left and right exposed;C-C for members and forces & MWFRS for reactions shown; Lumber DOL=1.15 plate grip DOL=1.15
3) This truss has been designed for a 20.0 psf bottom chord live load nonconcurrent with any other live loads.
4) * This truss has been designed for a live load of 20.0psf on the bottom chord in all areas where a rectangle 3-6-0 tall by 2-0-0 wide will fit between the bottom chord and any other members, with BCDL = 10.0psf.
5) Refer to girder(s) for truss to truss connections.
6) Provide mechanical connection (by others) of truss to bearing plate capable of withstanding 81 lb uplift at joint 2, 215 lb uplift at joint 13, 235 lb uplift at joint 11 and 21 lb uplift at joint 10.
7) This truss is designed in accordance with the 2009 International Residential Code sections R502.11.1 and R802.10.2 and referenced standard ANSI/TPI 1.
8) "Semi-rigid pitchbreaks with fixed heels" Member end fixity model was used in the analysis and design of this truss.

LOAD CASE(S) Standard

PDF from James Fletcher

Job	Truss	Truss Type	Qty	Ply	SAVANNAH W/ ROG & PART ATTIC
25917	T-1VX	COMMON	6	1	

Job Reference (optional)

Structural Technologies, Doswell, VA 23047

Run: 7.600 s Oct 3 2014 Print: 7.600 s Oct 3 2014 MiTek Industries, Inc. Fri Mar 20 14:56:55 2015 Page 1
ID:hNjBGyXDZHd0w6QHrgvER7yQsfP-F7B1R4QBndPWOfiq6UA0McLs89bAfRVKgu63DzZ0k6

-1-0-0	8-7-12	14-5-10	21-0-0	28-4-12	34-11-9	42-0-0
1-0-0	8-7-12	5-9-14	6-6-6	7-4-12	6-6-13	7-0-7

Scale = 1:77.3

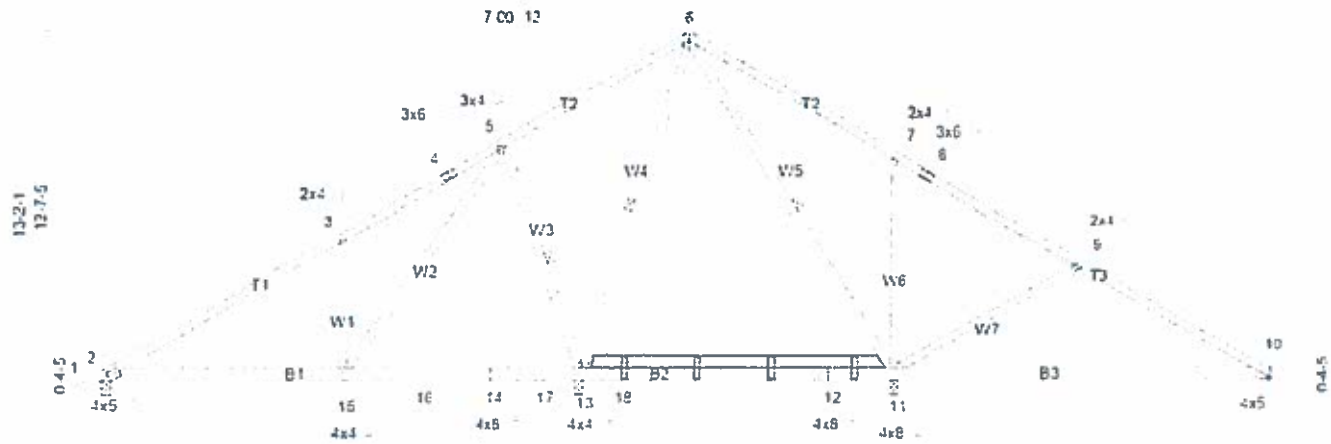

8-7-12		17-1-4		28-4-12				42-0-0			
8-7-12		8-5-8		11-3-8				13-7-4			

Plate Offsets (X,Y)-- [2:0-3-3,0-1-14], [10:0-1-4,0-0-3]

LOADING (psf)		SPACING-	2-0-0	CSI.		DEFL.	in	(loc)	l/defl	L/d	PLATES	GRIP
TCLL	20.0	Plate Grip DOL	1.15	TC	0.76	Vert(LL)	-0.36	10-11	>448	240	MT20	244/190
TCDL	10.0	Lumber DOL	1.15	BC	0.69	Vert(TL)	-0.67	10-11	>242	180		
BCLL	0.0 *	Rep Stress Incr	YES	WB	0.54	Horz(TL)	0.01	10	n/a	n/a		
BCDL	10.0	Code IRC2009/TPI2007		(Matrix)							Weight: 268 lb	FT = 5%

LUMBER-
TOP CHORD 2x4 SP No.2
BOT CHORD 2x6 SP No.2 *Except* B3: 2x6 SP No.1D
WEBS 2x4 SP No.3

STACH (1) 2X6 ATOP BOTTOM CHORD AS SHOWN. ATTACH W/ 2X4 X 11" BLOCKS SET 36" OC ONE FACE. USE (4) 16D BOX NAILS EACH MEMBER EACH CONNECTION

BRACING-
TOP CHORD Structural wood sheathing directly applied or 5-2-7 oc purlins.
BOT CHORD Rigid ceiling directly applied or 6-0-0 oc bracing. Except: 10-0-0 oc bracing: 2-15
WEBS 1 Row at midpt 5-13, 6-13, 6-11

MiTek recommends that Stabilizers and required cross bracing be installed during truss erection, in accordance with Stabilizer Installation guide.

REACTIONS. (lb/size) 2=615/0-4-0, 13=1657/0-3-8, 11=1248/0-3-8, 10=366 Mechanical
Max Horz 2=293(LC 5)
Max Uplift 2=-81(LC 6), 13=-215(LC 6), 11=-235(LC 7), 10=-21(LC 7)
Max Grav 2=620(LC 10), 13=1657(LC 1), 11=1250(LC 11), 10=397(LC 11)

FORCES. (lb) - Maximum Compression/Maximum Tension
TOP CHORD 1-2=0/33, 2-3=-653/68, 3-4=-613/165, 4-5=-455/197, 5-6=-42/402, 6-7=-1/324, 7-8=-36/327, 8-9=-73/144, 9-10=-343/58
BOT CHORD 2-15=-137/448, 15-16=-94/191, 14-16=-94/191, 14-17=-94/191, 13-17=-94/191, 13-18=-137/233, 12-18=-137/233, 11-12=-137/233, 10-11=-14/214
WEBS 3-15=-435/211, 5-15=-219/877, 5-13=-703/256, 6-13=-539/34, 6-11=-170/0, 7-11=-458/225, 9-11=-412/189

NOTES-
1) Unbalanced roof live loads have been considered for this design.
2) Wind: ASCE 7-05; 90mph; TCDL=6.0psf; BCDL=3.0psf; h=25ft; Cat. II; Exp B; enclosed; MWFRS (low-rise) gable end zone and C-C Exterior(2) zone; cantilever left and right exposed ; end vertical left and right exposed;C-C for members and forces & MWFRS for reactions shown; Lumber DOL=1.15 plate grip DOL=1.15
3) This truss has been designed for a 20.0 psf bottom chord live load nonconcurrent with any other live loads.
4) * This truss has been designed for a live load of 20.0psf on the bottom chord in all areas where a rectangle 3-6-0 tall by 2-0-0 wide will fit between the bottom chord and any other members, with BCDL = 10.0psf.
5) Refer to girder(s) for truss to truss connections.
6) Provide mechanical connection (by others) of truss to bearing plate capable of withstanding 81 lb uplift at joint 2, 215 lb uplift at joint 13, 235 lb uplift at joint 11 and 21 lb uplift at joint 10.
7) This truss is designed in accordance with the 2009 International Residential Code sections R502.11.1 and R802.10.2 and referenced standard ANSI/TPI 1.
8) "Semi-rigid pitchbreaks with fixed heels" Member end fixity model was used in the analysis and design of this truss.

LOAD CASE(S) Standard

COMMONWEALTH OF VIRGINIA
REPAIR
JAMES H. FLETCHER
June 16, 2016
No. 26629
PROFESSIONAL ENGINEER

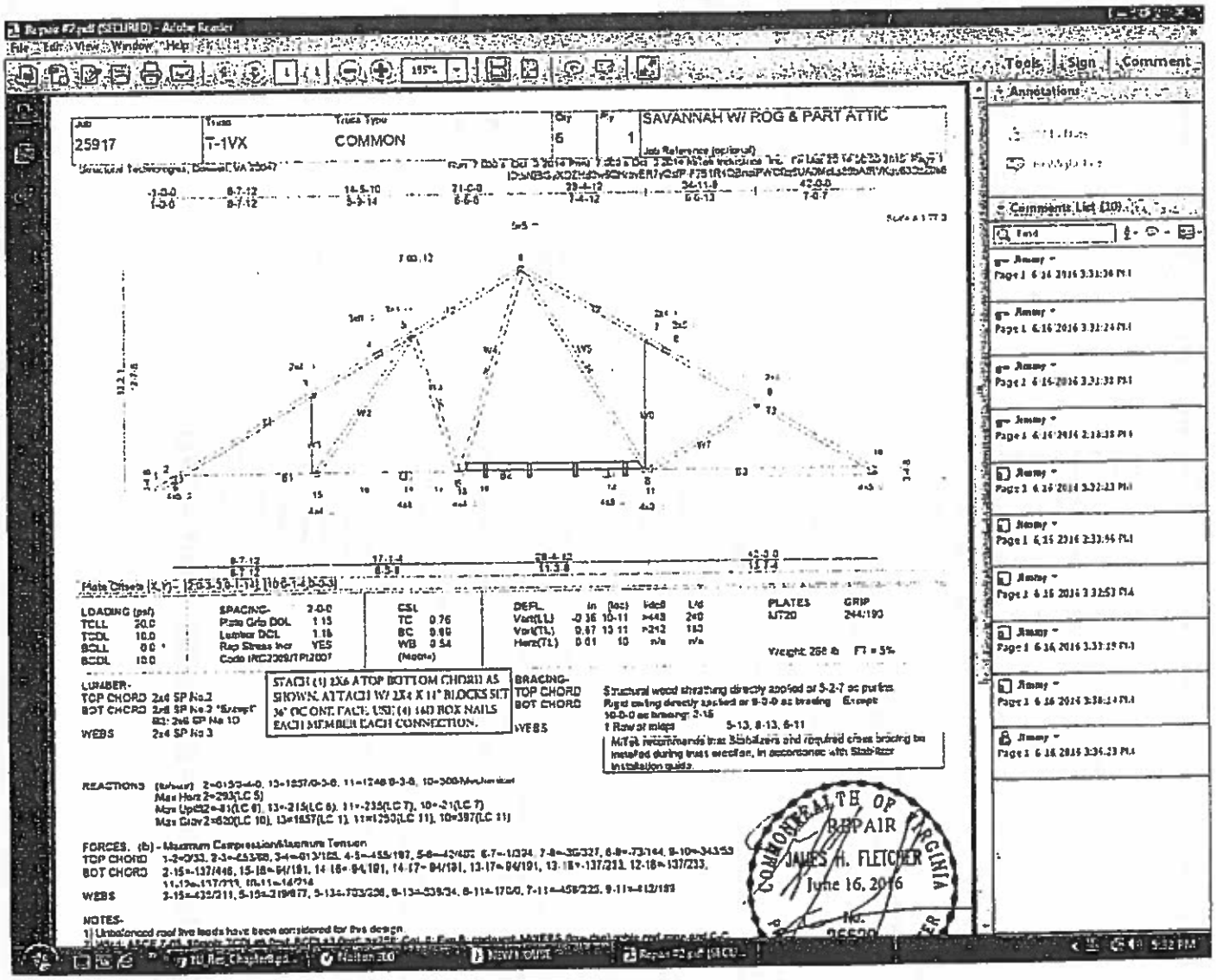
Repair #2.pdf (SECURED) - Adobe Reader
File Edit View Window Help
Tools Sign Comment
Annotations
Comments List (10)
Job 25917
Truss T-1VX
Truss Type COMMON
Qty 6
Ply 1
SAVANNAH W/ ROG & PART ATTIC
Job Reference (optional)
Structural Technologies, Donnell, VA 23047
Plate Offsets (X,Y)
LOADING (psf)
TCLL 20.0
TCDL 10.0
BCLL 0.0
BCDL 10.0
SPACING 2-0-0
Plate Grip DOL 1.15
Lumber DOL 1.15
Rep Stress Incr YES
Code IRC2009/TPI2007
CSL
TC 0.76
BC 0.89
WB 0.54
(Matrix)
DEFL. in (loc) l/defl L/d
Vert(LL) -0.36 10-11 >448 240
Vert(TL) 0.67 10-11 >242 180
Horz(TL) 0.01 10 n/a n/a
PLATES MT20
GRIP 244/190
Weight: 268 lb FT = 5%
LUMBER-
TOP CHORD 2x4 SP No.2
BOT CHORD 2x6 SP No.2 "Except" B2: 2x6 SP No.1D
WEBS 2x4 SP No.3
STACH (1) 2X6 ATOP BOTTOM CHORD AS SHOWN. ATTACH W/ 2X4 X 11" BLOCKS SET 36" OC ONE FACE. USE (4) 16D BOX NAILS EACH MEMBER EACH CONNECTION.
BRACING-
TOP CHORD Structural wood sheathing directly applied or 5-2-7 oc purlins.
BOT CHORD Rigid ceiling directly applied or 9-0-0 oc bracing. Except 10-0-0 oc bracing: 2-15
WEBS 1 Row at midpt 5-13, 8-13, 6-11
MiTek recommends that Stabilizers and required cross bracing be installed during truss erection, in accordance with Stabilizer Installation guide.
REACTIONS (lb/size) 2=0153/0-4-0, 13=1857/0-3-8, 11=1248/0-3-8, 10=300/Mechanical
Max Horz 2=293(LC 5)
Max Uplift2=-81(LC 6), 13=-215(LC 6), 11=-235(LC 7), 10=-21(LC 7)
Max Grav 2=620(LC 10), 13=1857(LC 1), 11=1250(LC 11), 10=397(LC 11)
FORCES. (lb) - Maximum Compression/Maximum Tension
TOP CHORD 1-2=0/33, 2-3=-653/68, 3-4=-613/165, 4-5=-455/197, 5-6=-42/402, 6-7=-1/324, 7-8=-36/327, 8-9=-73/144, 9-10=-343/53
BOT CHORD 2-15=-137/446, 15-16=-94/191, 14-16=-94/191, 14-17=-94/191, 13-17=-94/191, 13-18=-137/233, 12-18=-137/233, 11-12=-137/233, 10-11=-14/214
WEBS 3-15=-432/211, 5-13=-219/677, 5-14=-703/206, 8-13=-539/34, 8-11=-170/0, 7-11=-458/225, 9-11=-412/193
NOTES-
1) Unbalanced roof live loads have been considered for this design.
COMMONWEALTH OF VIRGINIA
REPAIR
JAMES H. FLETCHER
June 16, 2016
No.

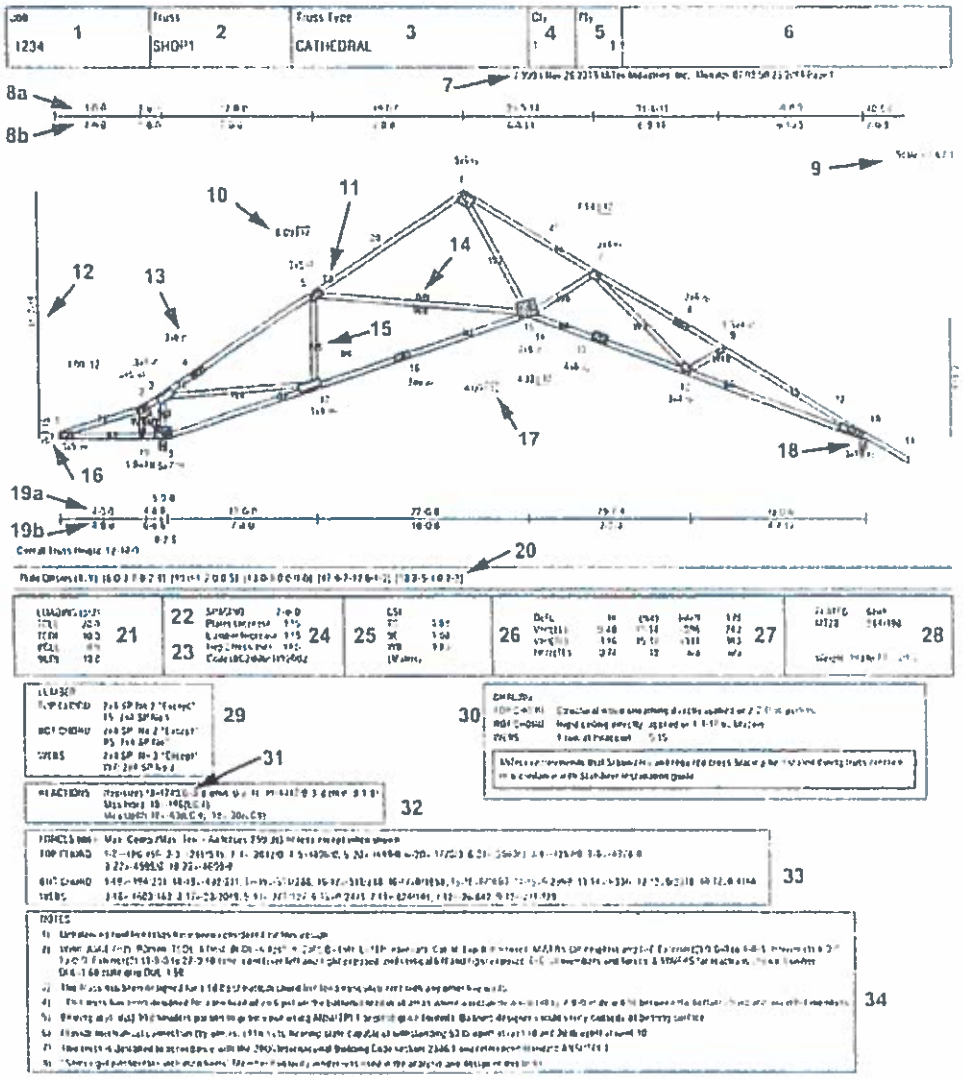

Reading a MiTek Engineering Drawing

1 Job name
2 Truss label
3 Truss type
4 Truss quantity
5 Number of plies
6 Job description
7 Software version
8a Cumulated dimensions of top chord – panel lengths are added together along the top chord of truss (feet-inches-sixteenths)
8b Panel lengths of the top chord – each section represents the horizontal distance between the centerline of two consecutive panel points along the top chord (feet-inches-sixteenths)
9 Drawing scale of the truss
10 Top chord slope – inches of vertical rise for each 12 inches of horizontal run
11 Top chord member label (if shown) – identification label used to distinguish pieces
12 Truss height – the height of the truss from the top of the bearing to the top of the top chord (trusses with multiple levels of top chord will have multiple truss height dimensions) (feet-inches-sixteenths)
13 Plate size, orientation and type – plate size in inches. The two lines denotes the direction of the plate
14 Continuous lateral bracing location
15 Web member label (if shown)
16 Heel height – the height from the top of bearing to the top of the top chord at the outside edge of the bearing (feet-inches-sixteenths)
17 Bottom chord slope – inches of vertical rise for each 12 inches of horizontal run
18 Bearing – a structural support, usually a wall or beam that is designated to carry the truss reaction loads to the foundation
19a Cumulated dimensions of bottom chord – panel lengths are added together along the bottom chord of truss (feet-inches-sixteenths)
19b Panel lengths of the bottom chord – each section represents the horizontal distance between the centerline of two consecutive panel points along the bottom chord (feet-inches-sixteenths)
20 Plate offsets (X, Y) – this section lists any horizontal and/or vertical plate offsets (in inches) and the location they occur
21 Design loading (PSF–pounds per square foot)
22 Spacing on center – feet-inches-sixteenths
23 Design code / Design standard
24 Duration of Load for plate and lumber design and Repetitive Use Factor
25 CSI – maximum Combined Stress Index for top chords, bottom chords and webs
26 Deflection- maximum deflection expected in a member (inches), Location of maximum deflection, maximum Span to deflection ratio expected in a member
27 Span to deflection ratios – input allowables
28 MiTek plate allowables (PSI) / estimated truss weight / fabrication tolerance
29 Lumber requirements
30 Required bracing for all members
31 Reaction (pounds), Bearing size - input and minimum required (if shown)
32 Maximum Uplift and/or Maximum Horizontal Reaction if applicable and Maximum Gravity if shown
33 Maximum member forces - Tension (+) Compression (-)
34 Notes
35 Additional loads / load cases

MiTek

7-15-15

7-17-15 Speeks - insulation needed

8-5-15 - RO - Squeaky MB floor, tears, Kitchen floor

RO - Came to repair cabinets

8-7-15 - RO - Vanity drawer fronts

8-26-15 - RO supposed to come / did not show

10-29-15 - Nick - 8:20 - Rick - Granite scratch

8:45 Speeks - low freon / improper install

1:00 Rick - RO - Mineral spirits BR floor / Squeky HW floor

1-5-15 - Bathworks

11-16-15 - RO - Rick - HW floors - put in claim w/ manf. rep

2-11-15 - HW Rep (salesman) / Rep said squeaky floor install prob.

3-10-16 - Nick - HW floor

Stockners - moved sprinkler heads

3-25-16 - 9:15 Floor installers arrived. Thinger "did you have water damage"

3-26-16 - 8:00 - Floor installers

3-30-16 - Siding / scheduled 9-10 arrival ☐ 10:49

3-31-16 - Garlite / RO - restrech carpet

1-29-16 - Tile & Shelf repair & replace

Stockners - no show

4-4-16 - Two doors delivered

4-15-16 - RO - ~~replaced~~ fixed damage from install

1-22-16 - Apple Door / Stockner - rescheduled

5-6-16 - Speeks / RO / Stockners

5-13-16 - Insulators / Apple

5-16-16 · Speeks - Thermostat IRD
5-27-16 - Stockners
5-31-16 - Allan Simmons
6-6-16 - Hardwood delivered
6-9-16 - Repair Oven bottom drawer
6-10-16 - HW removal / Subfloor replace
6-10-16 - Kevin Bucher / City Inspector / Tub
6-11-16 - HW install
Speeks - downstairs compressor not wrkg
6-17-16 - Speeks / Mikes Roofing
6-9-16 - Tub replacement
6-11-16 - Tile - cancelled by Nick
6-12-16 - Tile replacement
6-13-16 - Fixtures on tub
8-29-16 - Kinderwater / Nick / Jeff Driveway Coasters
9-2-16 - CR Phillips
9-9-16 - Speeks / Pro Inspectors
9-23-16 - Pro Inspectors

ANSI/TPI 1-2007

American National Standard

NATIONAL DESIGN STANDARD FOR METAL PLATE CONNECTED WOOD TRUSS CONSTRUCTION

2007 TRUSS PLATE INSTITUTE MEMBERS

CHEROKEE METAL PRODUCTS, INC.
www.masengills.com
Morristown, TN
(888) 871-9661

COMPUTRUS, INC.
www.computrusinc.com
Lake Elsinore, CA
(951) 245-9525

EAGLE METAL PRODUCTS
www.eaglemetal.com
Mabank, TX
(800) 521-4245

ITW BUILDING COMPONENTS GROUP INC. - ALPINE ENGINEERED PRODUCTS
www.itwbcg.com
Pompano Beach, FL
(800) 735-8055

ITW BUILDING COMPONENTS GROUP INC. - TRUSWAL SYSTEMS
www.itwbcg.com
Arlington, TX
(800) 521-9790

MITEK INDUSTRIES, INC.
www.mii.com
Chesterfield, MO
(314) 434-1200

ROBBINS ENGINEERING, INC.
www.robbinseng.com
Tampa, FL
(813) 972-1135

TEE-LOK CORPORATION
Edenton, NC
(252) 482-2176

Truss Plate Institute
Connecting the Truss Industry

218 North Lee Street, Ste. 312
Alexandria, VA 22314

From: Greg Holt [illegible]
Subject: Truss
Date: Nov 29, 2016, 5:01:38 PM
To: ghthorpe@yahoo.com
Cc: Clements, Ron [illegible]

Mr. Thorpe.

Per our meeting at the county on November 14th you requested a letter from Frank Lassiter. I was unable to obtain that letter. However, I did get correspondence from Ronnie Schwartz, Senior Truss Designer at Structural Technologies. TPI is the governing body for MiTek, Structural Technologies and all other truss manufacturer's in the United States. I hope this clears up our issue of the main house truss padding. Please see information below that was sent to me.

TPI clearly defines the Registered Design Professional, The Truss Designer , Truss Design Professional and their responsibilities which we are all in accordance with. TPI does not however clearly define the difference between a truss modification and a truss repair. The only place in TPI that I could find is in section 2.3.4.8 and 2.4.4.8 (see attached tpi-07 -2.jpg) where both terms are mentioned in the same section. So as far as TPI is concerned, a repair for a truss modification is the same as a repair for damage. So Frank Lassiter may very well be correct in referring to this as a "repair".

Also section 2.3.4.9 clearly states what the Contractor should do if there is truss damage. (see section 2.3.4.8 Truss Damage and Discovery) This section clearly indicates that the field repair is to be done in accordance with the written instructions and details provided by ANY Registered Design Professional. Jim Fletcher is a registered design professional.

I will also remind you that TPI is mentioned in the building code and in fact legislated law.

2.3.4.5 Truss Installation.

The Contractor shall ensure that the Building support conditions are of sufficient strength and stability to accommodate the loads applied during the Truss installation process. Truss installation shall comply with installation tolerances shown in BCSI-B1. Temporary Installation Restraint Bracing for the Truss system and the permanent Truss system Lateral Restraint and Diagonal Bracing for the completed Building and any other construction work related directly or indirectly to the Trusses shall be in-

ing, electrical, mechanical, bridging, bracing etc. until field repairs have been properly completed per Section 2.3.4.9.

2.3.4.9 Truss Damage Responsibilities.

In the event of damage, the Contractor shall

(a) Contact the Truss Manufacturer and Registered Design Professional for the Building to determine an adequate field repair and

13

Truss Plate Institute ANSI TPI 1-2007

(b) Construct the field repair in accordance with the written instructions and details provided by any Registered Design Professional

(f) Design loads as applicable including

(1) Top Chord live load (for roof Trusses, this shall be the controlling case of live load or

§2.3.4.8 and §2.4.4.8 Truss Damage Discovery.

As Trusses are engineered structural components, their structural integrity can be substantially altered by damaging, cutting, or modifying any of their members. Truss members may break if improperly handled during the unloading, storage, installation and erection phases of the project. If the Trusses are cut or modified by the construction trades to avoid interference with other building components, the Contractor is responsible for securing the documentation required for repairing the Truss. The Truss Manufacturer should be informed immediately of any damaged, cut, or field modified Trusses and may be able to assist in providing the required documentation

The Contractor shall provide to the Truss Manufacturer a copy of all Construction Documents pertinent to the Building Structural System and the design of the Trusses (i.e., framing plans, specifications, details, structural notes), and the name of the Building Designer if not noted on the Construction Documents.

Amended Construction Documents upon approval through the plan review/permitting process shall be immediately communicated to the Truss Manufacturer.

2.3.4.2 Information Provided to the Building Designer.

The Contractor, after reviewing and/or approving the Truss Submittal Package, shall forward the Truss Submittal Package to the Building Designer for review.

2.3.4.3 Truss Submittal Package Review.

The Contractor shall not proceed with the Truss installation until the Truss Submittal Package has been reviewed by the Building Designer.

2.3.4.4 Means and Methods.

The Contractor is responsible for the construction means, methods, techniques, sequences, procedures, programs and safety in connection with the receipt, storage, handling, installation, restraining and bracing of the Trusses.

2.3.4.5 Truss Installation.

The Contractor shall ensure that the Building support conditions are of sufficient strength and stability to accommodate the loads applied during the Truss installation process. Truss installation shall comply with installation tolerances shown in *BCSI-B1* Temporary Installation Restraint/Bracing for the Truss system and the permanent Truss system Lateral Restraint and Diagonal Bracing for the completed Building and any other construction work related directly or indirectly to the Trusses shall be installed by the Contractor in accordance with:

(a) The Construction Documents, and/or

(b) The Truss Submittal Package.

For Trusses clear spanning 60 ft. (18 m) or greater, see Section 2.3.4.6.

2.3.4.6 Pre-Installation Check.

The Contractor shall examine the Trusses delivered to the job site for:

(b) Cracked, dislodged or broken members; or

(c) Any other damage that can impair the structural integrity of the Truss.

2.3.4.7 Post-Installation Check.

The Contractor shall examine the Trusses after they are erected and installed for:

(a) Dislodged or missing connectors;

(b) Cracked, dislodged or broken members; or

(c) Any other damage that can impair the structural integrity of the Truss.

2.3.4.8 Truss Damage Discovery.

In the event that damage to a Truss is discovered the Contractor shall:

(a) Ensure that the Truss not be erected; or

(b) Ensure that any area within the Building supported by any such Truss already erected shall be appropriately shored or supported to prevent further damage from occurring and shall remain clear and free of any load imposed by people, plumbing, electrical, mechanical, bridging, bracing etc. until field repairs have been properly completed per Section 2.3.4.9.

2.3.4.9 Truss Damage Responsibilities.

In the event of damage, the Contractor shall:

(a) Contact the Truss Manufacturer and Building Designer to determine an adequate field repair; and

(b) Construct the field repair in accordance with the written instructions and details provided by the Truss Manufacturer, Building Designer, and/or any Registered Design Professional.

2.3.4.10 Responsibility Exemptions.

The Contractor is responsible for items listed in Section 2.3.4, and is not responsible for the requirements of other parties specified outside of Section 2.3.4.

2.3.5 Requirements of the Truss Designer.

2.3.5.1 Preparation of Truss Design Drawings.

The Truss Designer is responsible for the preparation of the Truss Design Drawings based on the Truss design

Copyright TPI. Single User Read-Only Document. Reproduction & networking prohibited. See Terms & Conditions at www.tpinst.org/terms-conditions

2.3.4 Requirements of the Contractor.

2.3.4.1 Information Provided to the Truss Manufacturer.

The Contractor shall provide to the Truss Manufacturer a copy of all Construction Documents pertinent to the Building Structural System and the design of the Trusses (i.e., framing plans, specifications, details, structural notes), and the name of the Building Designer if not noted on the Construction Documents.

Amended Construction Documents upon approval through the plan review/permitting process shall be immediately communicated to the Truss Manufacturer.

2.3.4.2 Information Provided to the Building Designer.

The Contractor, after reviewing and/or approving the Truss Submittal Package, shall forward the Truss Submittal Package to the Building Designer for review.

2.3.4.3 Truss Submittal Package Review.

The Contractor shall not proceed with the Truss installation until the Truss Submittal Package has been reviewed by the Building Designer.

2.3.4.4 Means and Methods.

The Contractor is responsible for the construction means, methods, techniques, sequences, procedures, programs, and safety in connection with the receipt, storage, handling, installation, restraining, and bracing of the Trusses.

2.3.4.5 Truss Installation.

The Contractor shall ensure that the Building support conditions are of sufficient strength and stability to accommodate the loads applied during the Truss installation process. Truss installation shall comply with installation tolerances shown in *BCSI-B1*. Temporary Installation Restraint/Bracing for the Truss system and the permanent Truss system Lateral Restraint and Diagonal Bracing for the completed Building and any other construction work related directly or indirectly to the Trusses shall be installed by the Contractor in accordance with:

(a) The Construction Documents, and/or

(b) The Truss Submittal Package.

For Trusses clear spanning 60 ft. (18 m) or greater, see Section 2.3.1.6.

(a) Dislodged or missing connectors,

(b) Cracked, dislodged or broken members, or

(c) Any other damage that can impair the structural integrity of the Truss.

2.3.4.7 Post-Installation Check.

The Contractor shall examine the Trusses after they are erected and installed for:

(a) Dislodged or missing connectors,

(b) Cracked, dislodged or broken members, or

(c) Any other damage that can impair the structural integrity of the Truss.

2.3.4.8 Truss Damage Discovery.

In the event that damage to a Truss is discovered the Contractor shall:

(a) Ensure that the Truss not be erected, or

(b) That any area within the Building supported by any such Truss already erected shall be appropriately shored or supported to prevent further damage from occurring and shall remain clear and free of any load imposed by people, plumbing, electrical, mechanical, bridging, bracing, etc. until field repairs have been properly completed per Section 2.3.4.9.

2.3.4.9 Truss Damage Responsibilities.

In the event of damage, the Contractor shall:

(a) Contact the Truss Manufacturer and Building Designer to determine an adequate field repair, and

(b) Construct the field repair in accordance with the written instructions and details provided by the Truss Manufacturer, Building Designer, and/or any Registered Design Professional.

2.3.4.10 Responsibility Exemptions.

The Contractor is responsible for items listed in Section 2.3.4, and is not responsible for the requirements of other parties specified outside of Section 2.3.4.

Structural Building Components Association

Associate Members of TPI

Truss Repair and Modifications

Educational Presentation

SBCA

Introduction

- What is the difference between a Repair and a Modification?
  - Truss Repair: restoring a truss back to its original shape and strength in situations where damage has caused a change or a reduction in either.
  - Truss Modification: altering a truss profile, loading, and/or bearing conditions to fit a situation for which the original truss was not designed.
- This presentation will cover:
  - The fundamental principles behind Truss Repair
  - Steps for a successful Truss Repair

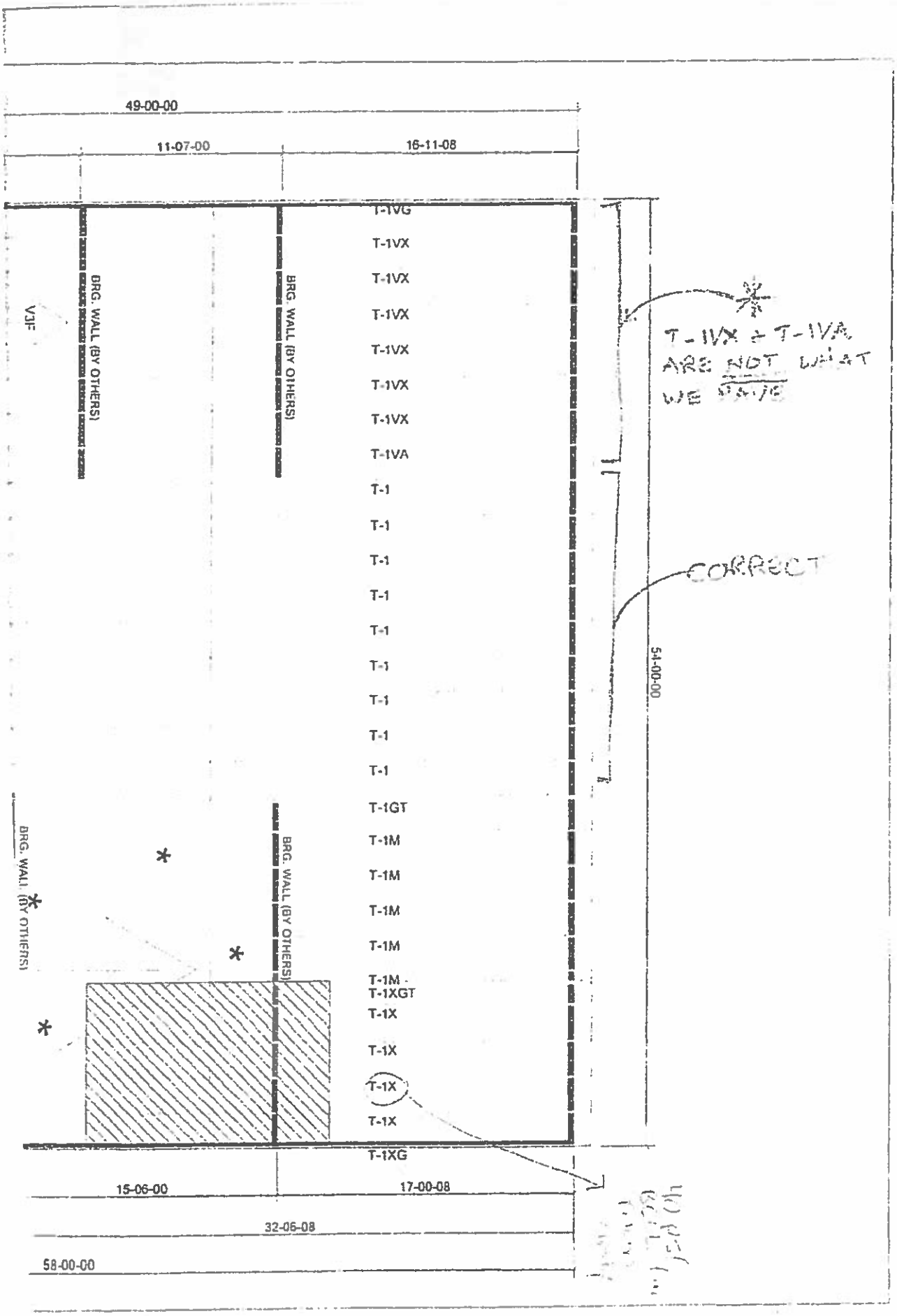
49-00-00
11-07-00
16-11-08
T-1VG
T-1VX
T-1VX
T-1VX
T-1VX
T-1VX
T-1VX
T-1VA
T-1
T-1
T-1
T-1
T-1
T-1
T-1
T-1
T-1GT
T-1M
T-1M
T-1M
T-1M
T-1M
T-1XGT
T-1X
T-1X
T-1X
T-1X
T-1XG
BRG. WALL (BY OTHERS)
BRG. WALL (BY OTHERS)
BRG. WALL (BY OTHERS)
BRG. WALL (BY OTHERS)
VJF
54-00-00
15-06-00
17-00-08
32-06-08
58-00-00
T-1VX + T-1VA ARE NOT WHAT WE HAVE
CORRECT

COMMONWEALTH OF VIRGINIA
BOARD FOR ARCHITECTS, PROFESSIONAL ENGINEERS, LAND SURVEYORS, CERTIFIED INTERIOR DESIGNERS AND LANDSCAPE ARCHITECTS

REGULATIONS Governing Architects, Professional Engineers, Land Surveyors, Certified Interior Designers and Landscape Architects

Last Updated January 1, 2016

STATUTES
Title 54.1, Chapter 4
Excerpts from Title 13.1

Department of Professional and Occupational Regulation
9960 Mayland Drive, Suite 400
Richmond, VA 23233
(804) 367-8500
www.dpor.virginia.gov

Historical Notes:

Derived from VR130-01-2 § 12.4, eff. October 18, 1985; amended, Virginia Register Volume 4, Issue 8, eff. March 1, 1988; Volume 6, Issue 20, eff. September 1, 1990; Volume 7, Issue 14, eff. May 8, 1991; Volume 8, Issue 7, eff. February 1, 1992; Volume 10, Issue 15, eff. May 19, 1994; Volume 18, Issue 7, eff. March 1, 2002; Volume 23, Issue 1, eff. February 1, 2007; Volume 32, Issue 6, eff. January 1, 2016.

18VAC10-20-730. Competency for assignments.

A. The professional shall undertake to perform professional assignments only when qualified by education or experience, or both, and licensed or certified in the profession involved. Licensed professionals may perform assignments related to interior design provided they do not hold themselves out as certified in this profession unless they are so certified by this board. The professional may accept an assignment requiring education or experience outside of the field of the professional's competence, but only to the extent that services are restricted to those phases of the project in which the professional is qualified. All other phases of such project shall be the responsibility of licensed or certified associates, consultants or employees.

B. A professional shall not misrepresent to a prospective or existing client or employer his qualifications and the scope of his responsibility in connection with work for which he is claiming credit.

C. The professional shall adhere to the minimum standards and requirements pertaining to the practice of his own profession, as well as other professions if incidental work is performed.

Historical Notes:

Derived from VR130-01-2 § 12.5, eff. October 18, 1985; amended, Virginia Register Volume 4, Issue 8, eff. March 1, 1988; Volume 6, Issue 20, eff. September 1, 1990; Volume 7, Issue 14, eff. May 8, 1991; Volume 8, Issue 7, eff. February 1, 1992; Volume 10, Issue 15, eff. May 19, 1994; Volume 16, Issue 3, eff. December 1, 1999; Volume 23, Issue 1, eff. February 1, 2007; Volume 26, Issue 4, eff. July 1, 2010.

18VAC10-20-740. Professional responsibility.

A. Unless exempt by statute, all architectural, engineering, land surveying, landscape architectural, and interior design work must be completed by a professional or a person performing the work who is under the direct control and personal supervision of a professional.

B. A professional shall be able to clearly define his scope and degree of direct control and personal supervision, clearly define how it was exercised, and demonstrate that he was responsible within that capacity for the work that he has sealed, signed, and dated. For the work prepared under his supervision, a professional shall:

1. Have detailed professional knowledge of the work;

2. Exercise the degree of direct control over work that includes:

   a. Having control over decisions on technical matters of policy and design;

   b. Personally making professional decisions or the review and approval of proposed decisions prior to implementation, including the consideration of alternatives to be investigated and compared for designed work, whenever professional decisions are made that could affect the health, safety, and welfare of the public involving permanent or temporary work;

   c. The selection or development of design standards and materials to be used; and

   d. Determining the validity and applicability of recommendations prior to incorporation into the work, including the qualifications of those making the recommendations;

3. Have exercised his professional judgment in all professional matters that are embodied in the work and the drawings, specifications, or other documents involved in the work; and

4. Have exercised critical examination and evaluation of an employee's, consultant's, subcontractor's, or project team member's work product, during and after preparation, for purposes of compliance with applicable laws, codes, ordinances, regulations, and usual and customary standards of care pertaining to professional practice.

C. The regulant shall not knowingly associate in a business venture with, or permit the use of his name, by any person or firm when there is reason to believe that person or firm is engaging in activity of a fraudulent or dishonest nature or is violating statutes or any of these regulations.

D. A regulant who has direct knowledge or reason to believe that any individual or firm may have violated or may currently be violating any of these provisions, or the provisions of Chapters 7 (§ 13.1-542.1 et seq.) and 13 (§ 13.1-1100 et seq.) of Title 13.1 or Chapters 1 (§ 54.1-100 et seq.) through 4 (§ 54.1-400 et seq.) of Title 54.1 of the Code of Virginia, shall immediately inform the board in writing and shall cooperate in furnishing any further information or assistance that may be required by the board or any of its agents.

E. Upon request by the board or any of its agents, the regulant shall produce any plan, plat, document, sketch, book, record, or copy thereof concerning a transaction covered by this chapter and shall cooperate in the investigation of a complaint filed with the board against a regulant.

F. Except as authorized by 18VAC10-20-760 A 2, a regulant shall not utilize the design, drawings, specifications, or work of another regulant to complete or to replicate any work without the written consent of the person or organization that owns the design, drawings, specifications, or work.

G. Utilization and modification of work.

1. A regulant who utilizes the designs, drawings, specifications, or work of another regulant pursuant to subsection F of this section or 18VAC10-20-760 A 2, or who modifies any plats or surveys, shall conduct a thorough review of the work to verify that it has been accomplished to the same extent that would have been done under the direct control and personal supervision of the regulant affixing the professional seal, signature, and date. The regulant shall assume full responsibility for the utilization of any unsealed work or any changes or modifications to previously sealed work.

2. The information contained in recorded plats or surveys may be utilized by another regulant without permission.

Historical Notes:

Derived from VR130-01-2 § 12.6, eff. October 18, 1985; amended, Virginia Register Volume 4, Issue 8, eff. March 1, 1988; Volume 6, Issue 20, eff. September 1, 1990; Volume 7, Issue 14, eff. May 8, 1991; Volume 8, Issue 7, eff. February 1, 1992; Volume 10, Issue 15, eff. May 19, 1994; Volume 13, Issue 23, eff. October 1, 1997; Volume 16, Issue 3, eff. December 1, 1999, Volume 18, Issue 7, eff. March 1, 2002; Volume 23, Issue 1, eff. February 1, 2007; Volume 32, Issue 6, eff. January 1, 2016.

18VAC10-20-750. Good standing.

A. A regulant licensed, certified, or registered to practice architecture, engineering, land surveying, landscape architecture, or interior design in any jurisdiction shall be in good standing in every jurisdiction where licensed, certified, or registered.

B. A regulant who has received a reprimand, civil penalty, or monetary penalty, or whose license, certificate or registration is revoked, suspended, denied, or surrendered as a result of a disciplinary action by any jurisdiction, shall notify the board of such action within 30 days.

Historical Notes:

Derived from VR130-01-2 § 12.7, eff. October 18, 1985; amended, Virginia Register Volume 4, Issue 8, eff. March 1, 1988; Volume 6, Issue 20, eff. September 1, 1990, Volume 7, Issue 14, eff. May 8, 1991; Volume 8, Issue 7, eff. February 1, 1992; Volume 10, Issue 15, eff. May 19, 1994; Volume 18, Issue 7, eff. March 1, 2002; Volume 23, Issue 1, eff. February 1, 2007; Volume 32, Issue 6, eff. January 1, 2016.

18VAC10-20-760. Use of seal.

A. Affixing of a professional seal, signature, and date shall indicate that the professional has exercised direct control and personal supervision over the work to which it is affixed. Affixing of the seal, signature, and date also indicates the professional's acceptance of responsibility for the work shown thereon.

1. No professional shall affix a seal, signature, and date or certification to a plan, plat, document, sketch, or other work constituting the practice of the professions regulated that has been prepared by an unlicensed or uncertified person unless

such work was performed under the direct control and personal supervision of the professional while the unlicensed or uncertified person was an employee of the same firm as the professional or was under written contract to the same firm that employs the professional.

2. If the original professional of record is no longer able to seal, sign, and date completed professional work, such work may be sealed, signed, and dated by another qualified professional pursuant to the standards established in 18VAC10-20-740 G 1.

B. Documents to be sealed.

1. All final documents, including original cover sheet of plans, plats, documents, sketches, technical reports, and specifications, and each original sheet of plans, plats, or drawings prepared by the professional, or someone under his direct control and personal supervision, shall be sealed, signed, and dated by the professional. All final documents shall also bear the professional's name or firm name, address, and project name. Final documents are completed documents or copies submitted on a client's behalf for approval by authorities, for construction, or for recordation.

2. For projects involving multiple sets of plans from multiple professionals involved in the same project, each professional shall seal, sign, and date the final documents for the work component that he completed or that was completed under his direct control and personal supervision. The professional responsible for the compilation of the project shall seal, sign, and date the cover sheet of the aggregate collection of final documents for the project.

C. An electronic seal, signature, and date are permitted to be used in lieu of an original seal, signature, and date when the following criteria, and all other requirements of this section, are met:

1. It is a unique identification of the professional;

2. It is verifiable: and

3. It is under the professional's direct control.

D. Incomplete plans, plats, documents, and sketches, whether advance or preliminary copies, shall be so identified on the plan, plat, document, or sketch and need not be sealed, signed or dated. Advance or preliminary copies of incomplete plans, plats, documents, and sketches must be clearly identified as not complete but need not be sealed, signed, or dated.

E. All work performed by a professional who is licensed or certified by this board, including work that is exempt from licensure pursuant to § 54.1-402 of the Code of Virginia, shall be sealed, signed, and dated pursuant to subsection B of this section.

F. The original seal shall conform in detail and size to the design illustrated below and shall be two inches in diameter. The designs below may not be shown to scale:

*The number referred to is the last six-digit number as shown on the license or certificate. The number is permanent. Leading zeros contained in the six-digit number may be omitted from the seal.

Historical Notes:

Derived from VR130-01-2 § 12.8, eff. October 18, 1985; amended, Virginia Register Volume 4, Issue 8, eff. March 1, 1988; Volume 6, Issue 20, eff. September 1, 1990; Volume 7, Issue 14, eff. May 8, 1991; Volume 8, Issue 7, eff. February 1, 1992; Volume 10, Issue 15, eff. May 19, 1994; Volume 13, Issue 23, eff. October 1, 1997; Volume 16, Issue 3, eff. December 1, 1999; Volume 18, Issue 7, eff. March 1, 2002; Volume 23, Issue 1, eff. February 1, 2007; Volume 25, Issue 3, eff. December 1, 2008; Volume 26, Issue 4, eff. July 1, 2010; Volume 32, Issue 6, eff. January 1, 2016.

Trusses

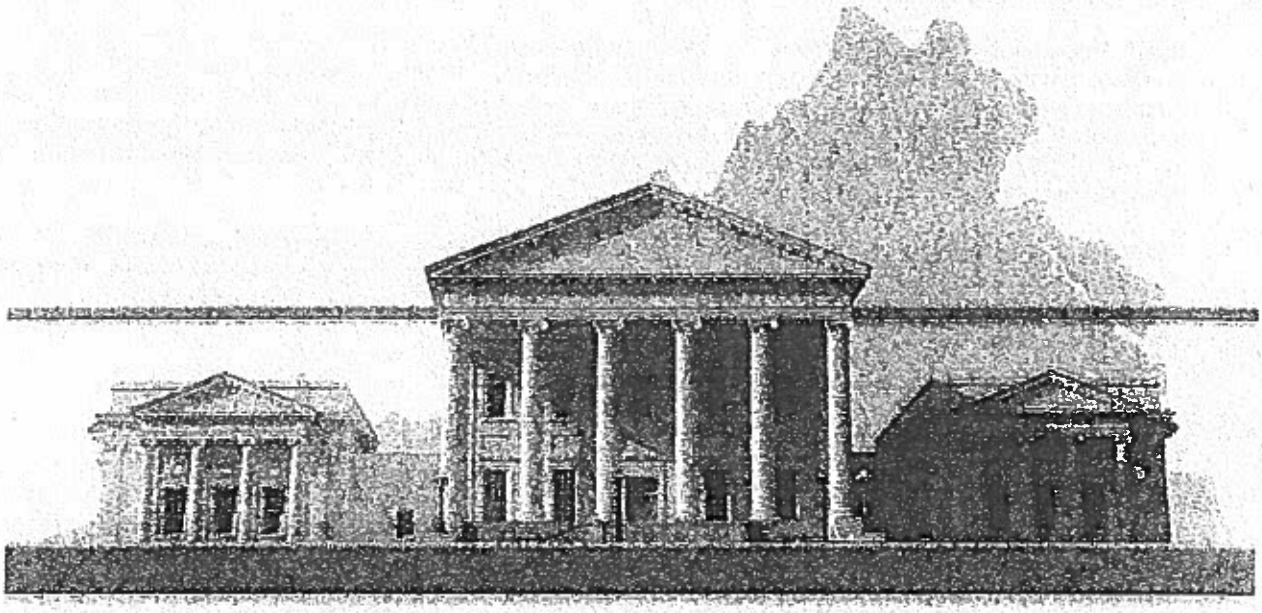

Virginia Construction Code

Part I of the Virginia Uniform Statewide Building Code

2009

Effective March 1, 2011

that would indicate substantial work has been performed. Upon written request, the building official may grant one or more extensions of time, not to exceed one year per extension.

110.7 Single-family dwelling permits. The building official shall be permitted to require a three year time limit to complete construction of new detached single-family dwellings, additions to detached single-family dwellings and residential accessory structures. The time limit shall begin from the issuance date of the permit. The building official may grant extensions of time if the applicant can demonstrate substantive progress, characterized by approved inspections as specified in Section 113.3 of at least one inspection within a period of six months or other evidence that would indicate substantial work has been performed.

110.8 Revocation of a permit. The building official may revoke a permit or approval issued under this code in the case of any false statement, misrepresentation of fact, abandonment of work, failure to complete construction as required by Section 110.7 or incorrect information supplied by the applicant in the application or construction documents on which the permit or approval was based.

SECTION 111
RDP SERVICES

111.1 When required. In accordance with Section 54.1-410 of the Code of Virginia and under the general authority of this code, the local building department shall establish a procedure to ensure that construction documents under Section 109 are prepared by an RDP in any case in which the exemptions contained in Sections 54.1-401, 54.1-402 or 54.1-402.1 of the Code of Virginia are not applicable or in any case where the building official determines it necessary. When required under Section 54.1-402 of the Code of Virginia or when required by the building official, or both, construction documents shall bear the name and address of the author and his occupation.

Note: Information on the types of construction required to be designed by an RDP is included in the "Related Laws Package" available from DHCD.

111.2 Special inspection requirements. Special inspections shall be conducted when required by Section 1704. Individuals or agencies, or both, conducting special inspections shall meet the qualification requirements of Sections 1703 and 1704.1. The permit applicant shall submit a completed statement of special inspections with the permit application. The building official shall review, and if satisfied that the requirements have been met, approve the statement of special inspections as required in Sections 1704.1.1 and 1705 as a requisite to the issuance of a building permit. The building official may require interim inspection reports. The building official shall receive, and if satisfied that the requirements have been met, approve a final report of special inspections as specified in Section 1704.1.2. All fees and costs related to the special inspections shall be the responsibility of the building owner.

SECTION 112
WORKMANSHIP, MATERIALS AND EQUIPMENT

112.1 General. It shall be the duty of any person performing work covered by this code to comply with all applicable provisions of this code and to perform and complete such work so as to secure the results intended by the USBC.

112.2 Alternative methods or materials. In accordance with Section 36-99 of the Code of Virginia, where practical, the provisions of this code are stated in terms of required level of performance so as to facilitate the prompt acceptance of new building materials and methods. When generally recognized standards of performance are not available, this section and other applicable requirements of this code provide for acceptance of materials and methods whose performance is substantially equal in safety to those specified on the basis of reliable test and evaluation data presented by the proponent In addition, as a requirement of this code, the building official shall require that sufficient technical data be submitted to substantiate the proposed use of any material, equipment, device, assembly or method of construction.

112.3 Documentation and approval. In determining whether any material, equipment, device, assembly or method of construction complies with this code, the building official shall approve items listed by nationally recognized testing laboratories (NRTL), when such items are listed for the intended use and application, and in addition, may consider the recommendations of RDPs. Approval shall be issued when the building official finds that the proposed design is satisfactory and complies with the intent of the provisions of this code and that the material, equipment, device, assembly or method of construction offered is, for the purpose intended, at least the equivalent of that prescribed by the code. Such approval is subject to all applicable requirements of this code and the material, equipment, device, assembly or method of

construction shall be installed in accordance with the conditions of the approval and their listings. In addition, the building official may revoke such approval whenever it is discovered that such approval was issued in error or on the basis of incorrect information, or where there are repeated violations of the USBC.

112.3.1 Conditions of listings. Where conflicts between this code and conditions of the listing or the manufacturer's installation instructions occur, the provisions of this code shall apply.

Exception: Where a code provision is less restrictive than the conditions of the listing of the equipment or appliance or the manufacturer's installation instructions, the conditions of the listing and the manufacturers installation instructions shall apply.

112.4 Used material and equipment. Used materials, equipment and devices may be approved provided they have been reconditioned, tested or examined and found to be in good and proper working condition and acceptable for use by the building official.

SECTION 113
INSPECTIONS

113.1 General. In accordance with Section 36-105 of the Code of Virginia, any building or structure may be inspected at any time before completion, and shall not be deemed in compliance until approved by the inspecting authority. Where the construction cost is less than $2,500, however, the inspection may, in the discretion of the inspecting authority, be waived. The building official shall coordinate all reports of inspections for compliance with the USBC, with inspections of fire and health officials delegated such authority, prior to the issuance of an occupancy permit.

113.1.1 Equipment required. Any ladder, scaffolding or test equipment necessary to conduct or witness a requested inspection shall be provided by the permit holder.

113.1.2 Duty to notify. When construction reaches a stage of completion that requires an inspection, the permit holder shall notify the building official.

113.1.3 Duty to inspect. Except as provided for in Section 113.7, the building official shall perform the requested inspection in accordance with Section 113.6 when notified in accordance with Section 113.1.2.

113.2 Prerequisites. The building official may conduct a site inspection prior to issuing a permit. When conducting inspections pursuant to this code, all personnel shall carry proper credentials.

113.3 Minimum inspections. The following minimum inspections shall be conducted by the building official when applicable to the construction or permit:

1. Inspection of footing excavations and reinforcement material for concrete footings prior to the placement of concrete.
2. Inspection of foundation systems during phases of construction necessary to assure compliance with this code.
3. Inspection of preparatory work prior to the placement of concrete.
4. Inspection of structural members and fasteners prior to concealment.
5. Inspection of electrical, mechanical and plumbing materials, equipment and systems prior to concealment.
6. Inspection of energy conservation material prior to concealment.
7. Final inspection.

113.4 Additional inspections. The building official may designate additional inspections and tests to be conducted during the construction of a building or structure and shall so notify the permit holder.

BACK TO TOP

permitted by the manufacturer's recommendations or where the effec such alterations are specifically considered in the design of the member by a *registered design professional*.

R502.9 Fastening.
Floor framing shall be nailed in accordance with Table R602.3(1). Where posts and beam or girder construction is used to support floor framing, positive connections shall be provided to ensure against uplift and lateral displacement.

R502.10 Framing of openings.
Openings in floor framing shall be framed with a header and trimmer joists. When the header joist span does not exceed 4 feet (1219 mm), the header joist may be a single member the same size as the floor joist. Single trimmer joists may be used to carry a single header joist that is located within 3 feet (914 mm) of the trimmer joist bearing. When the header joist span exceeds 4 feet (1219 mm), the trimmer joists and the header joist shall be doubled and of sufficient cross section to support the floor joists framing into the header. *Approved* hangers shall be used for the header joist to trimmer joist connections when the header joist span exceeds 6 feet (1829 mm). Tail joists over 12 feet (3658 mm) long shall be supported at the header by framing anchors or on ledger strips not less than 2 inches by 2 inches (51 mm by 51 mm).

R502.11 Wood trusses.

R502.11.1 Design.
Wood trusses shall be designed in accordance with *approved* engineering practice. The design and manufacture of metal plate connected wood trusses shall comply with ANSI/TPI 1. The truss design drawings shall be prepared by a registered professional where required by the statutes of the *jurisdiction* in which the project is to be constructed in accordance with Section R106.1.

R502.11.2 Bracing.
Trusses shall be braced to prevent rotation and provide lateral stability in accordance with the requirements specified in the *construction documents* for the building and on the individual truss design drawings. In the absence of specific bracing requirements, trusses shall be braced in accordance with accepted industry practices, such as, the SBCA *Building Component Safety Information (BCSI) Guide to Good Practice for Handling, Installing & Bracing of Metal Plate Connected Wood Trusses*.

R502.11.3 Alterations to trusses.
Truss members and components shall not be cut, notched, spliced or otherwise altered in any way without the approval of a registered *design professional*. *Alterations* resulting in the addition of load (e.g., HVAC *equipment*, water heater, etc.), that exceed the design load for the truss, shall

BACK TO TOP

105.2.1 Qualifications of technical assistants.
A technical assistant shall have at least three years of experience and general knowledge in at least one of the following areas: building construction; building, fire or housing inspections; plumbing, electrical or mechanical trades; or fire protection, elevator or property maintenance work. Any combination of education and experience that would confer equivalent knowledge and ability shall be deemed to satisfy this requirement. The locality may establish additional qualification requirements.

105.2.2 Certification of technical assistants.
A technical assistant shall be certified in the appropriate subject area within 18 months after becoming a technical assistant. When required by local policy to have two or more certifications, a technical assistant shall obtain the additional certifications within three years from the date of such requirement.

Exception: A technical assistant in place prior to March 1, 1988, shall not be required to meet the certification requirements in this section while continuing to serve in the same capacity in the same locality.

105.2.3 Requirements for periodic maintenance and continuing education.
Technical assistants shall attend periodic maintenance training as designated by DHCD. In addition to the periodic maintenance training required above, technical assistants shall attend 16 hours of continuing education every two years as approved by DHCD. If a technical assistant possesses more than one BHCD certificate, the 16 hours shall satisfy the continuing education requirement for all BHCD certificates.

105.3 Conflict of interest.
The standards of conduct for building officials and technical assistants shall be in accordance with the provisions of the State and Local Government Conflict of Interests Act, Chapter 31 (Section 2.2-3100 et seq.) of Title 2.2 of the Code of Virginia.

105.4 Records.
The local building department shall retain a record of applications received, permits, certificates, notices and orders issued, fees collected and reports of inspection in accordance with The Library of Virginia's General Schedule Number Six.

SECTION 106 POWERS AND DUTIES OF THE BUILDING OFFICIAL

106.1 Powers and duties, generally.
The building official shall enforce this code as set out herein and as

interpreted by the State Review Board.

106.2 Delegation of authority.
The building official may delegate powers and duties except where such authority is limited by the local government. However, such limitations of authority by the local government are not applicable to the third-party inspector policy required by Section 113.7.1 nor shall such limitations of authority by the local government have the effect of altering the provisions of this code or creating building regulations. When such delegations are made, the building official shall be responsible for assuring that they are carried out in accordance with the provisions of this code.

106.3 Issuance of modifications.
Upon written application by an owner or an owner's agent, the building official may approve a modification of any provision of the USBC provided the spirit and functional intent of the code are observed and public health, welfare and safety are assured. The decision of the building official concerning a modification shall be made in writing and the application for a modification and the decision of the building official concerning such modification shall be retained in the permanent records of the local building department.

Note: The USBC references nationally recognized model codes and standards. Future amendments to such codes and standards are not automatically included in the USBC; however the building official should give them due consideration in deciding whether to approve a modification.

106.3.1 Substantiation of modification.
The building official may require or may consider a statement from an RDP or other person competent in the subject area of the application as to the equivalency of the proposed modification. In addition, the building official may require the application to include construction documents sealed by an RDP.

106.3.2 Use of performance code.
Compliance with the provisions of a nationally recognized performance code when approved as a modification shall be considered to constitute compliance with this code. All documents submitted as part of such consideration shall be retained in the permanent records of the local building department.

SECTION 107 FEES

107.1 Authority for charging fees.
In accordance with Section 36-105 of the Code of Virginia, fees may be levied by the local governing body in order to defray the cost of enforcement

of work, failure to complete construction as required by Section 110.7 or incorrect information supplied by the applicant in the application or construction documents on which the permit or approval was based.

SECTION 111 RDP SERVICES

111.1 When required.

In accordance with Section 54.1-410 of the Code of Virginia and under the general authority of this code, the local building department shall establish a procedure to ensure that construction documents under Section 109 are prepared by an RDP in any case in which the exemptions contained in Sections 54.1-401, 54.1-402 or 54.1-402.1 of the Code of Virginia are not applicable or in any case where the building official determines it necessary. When required under Section 54.1-402 of the Code of Virginia or when required by the building official, or both, construction documents shall bear the name and address of the author and his occupation.

Note: Information on the types of construction required to be designed by an RDP is included in the "Related Laws Package" available from DHCD.

SECTION 112 WORKMANSHIP, MATERIALS AND EQUIPMENT

112.1 General.

It shall be the duty of any person performing work covered by this code to comply with all applicable provisions of this code and to perform and complete such work so as to secure the results intended by the USBC. Damage to regulated building components caused by violations of this code or by the use of faulty materials or installations shall be considered as separate violations of this code and shall be subject to the applicable provisions of Section 115.

112.2 Alternative methods or materials.

In accordance with Section 36-99 of the Code of Virginia, where practical, the provisions of this code are stated in terms of required level of performance so as to facilitate the prompt acceptance of new buildin materials and methods. When generally recognized standards of performance are not available, this section and other applicable requirements of this code provide for acceptance of materials and methods whose performance is substantially equal in safety to those specified on the basis of reliable test and evaluation data presented by the proponent. In addition, as a requirement of this code, the building official shall require that sufficient technical data be submitted to substantiate the proposed use of any material, equipment, device, assembly or method of construction.

BACK TO TOP

112.3 Documentation and approval.

In determining whether any material, equipment, device, assembly or

method of construction complies with this code, the building official shall approve items listed by nationally recognized testing laboratories, when such items are listed for the intended use and application, and in addition, may consider the recommendations of RDPs. Approval shall be issued when the building official finds that the proposed design is satisfactory and complies with the intent of the provisions of this code and that the material, equipment, device, assembly or method of construction offered is, for the purpose intended, at least the equivalent of that prescribed by the code. Such approval is subject to all applicable requirements of this code and the material, equipment, device, assembly or method of construction shall be installed in accordance with the conditions of the approval and their listings. In addition, the building official may revoke such approval whenever it is discovered that such approval was issued in error or on the basis of incorrect information, or where there are repeated violations of the USBC.

112.3.1 Conditions of listings.
Where conflicts between this code and conditions of the listing or the manufacturer's installation instructions occur, the provisions of this code shall apply.

Exception: Where a code provision is less restrictive than the conditions of the listing of the equipment or appliance or the manufacturer's installation instructions, the conditions of the listing and the manufacturer's installation instructions shall apply.

112.4 Used material and equipment.
Used materials, equipment and devices may be approved provided they have been reconditioned, tested or examined and found to be in good and proper working condition and acceptable for use by the building official.

SECTION 113 INSPECTIONS

113.1 General.
In accordance with Section 36-105 of the Code of Virginia, any building or structure may be inspected at any time before completion, and shall deemed in compliance until approved by the inspecting authority. WI construction cost is less than $2,500, however, the inspection may, in the discretion of the inspecting authority, be waived. The building official shall coordinate all reports of inspections for compliance with the USBC, with inspections of fire and health officials delegated such authority, prior to the issuance of an occupancy permit.

BACK TO TOP

113.1.1 Equipment required.
Any ladder, scaffolding or test equipment necessary to conduct or witness a requested inspection shall be provided by the permit holder.

36. Add Section R329 Fire Extinguishers.

37. Add Section R329.1 to read:

R329.1 Kitchen areas. Other than where the dwelling is equipped with an approved sprinkler system in accordance with Section R313, a fire extinguisher having a rating of 2-A:10-B:C or an approved equivalent type of fire extinguisher shall be installed in the kitchen area.

38. Change Section R401.3 to read:

R401.3 Drainage. Surface drainage shall be diverted to a storm sewer conveyance or other approved point of collection that does not create a hazard to the dwelling unit. Lots shall be graded to drain surface water away from foundation walls. The grade shall fall a minimum of 6 inches (152 mm)within the first 10 feet (3048 mm).

Exception: Where lot lines, walls, slopes or other physical barriers prohibit 6 inches (152 mm) of fall within 10 feet (3048 mm), drains or swales shall be constructed to ensure drainage away from the structure. Impervious surfaces within 10 feet (3048 mm) of the building foundation shall be sloped a minimum of 2 percent away from the building

39. Change Section R403.1 to read:

R403.1 General. All exterior walls shall be supported on continuous solid or fully grouted masonry or concrete footings, wood foundations, or other approved structural systems which shall be of sufficient design to accommodate all loads according to Section R301 and to transmit the resulting loads to the soil within the limitations as determined from the character of the soil. Footings shall be supported on undisturbed natural soils or engineered fill.

Exception: One-story detached accessory structures used as tool and storage sheds, playhouses and similar uses, not exceeding 256 square feet (23.7824 m^2) of building area, provided all of the following conditions are met:

1. The building eave height is 10 feet or less.
2. The maximum height from the finished floor level to grade does not exceed 18 inches.
3. The supporting structural elements in direct contact with the ground shall be placed level on firm soil and when such elements are wood they shall be approved pressure preservative treated suitable for ground contact use.
4. The structure is anchored to withstand wind loads as required by this code.
5. The structure shall be of light-frame construction whose vertical and horizontal structural elements are primarily formed by a system of repetitive wood or light gauge steel framing members, with walls and roof of light weight material, not slate, tile, brick or masonry.

40. Change Exceptions 2 and 3 in Section R403.1.6 to read:

2. Walls 24 inches (610 mm) total length or shorter connecting offset braced wall panels shall be anchored to the foundation with a minimum of one anchor bolt located in the center third of the plate section.
3. Connection of walls 12 inches (305 mm) total length or shorter connecting offset braced wall panels to the foundation without anchor bolts shall be permitted.

41. Delete Item 5 of Section R403.1.6.1.

42. Add Section R408.3.1 to read:

625. ***Chesterfield County v. Karnos*, 36 Va. Cir. 186 (1995).**

Chesterfield County's Board of Building Code Appeals (BBCA) ruled that a local building inspector had to issue a notice of violation on a builder. The County appealed the BBCA decision to the State Building Code Technical Review Board, which upheld the determination. The County then appealed to the Circuit Court.

The circuit court ruled that Chesterfield County lacked standing to appeal, as not being an aggrieved person within VA. CODE ANN. §9-6.14:16. The County's concern about not being able to pursue building code violations in its own informal way was held not a legally sufficient aggrieved concern. The circuit court also ruled that the Technical Review Board decision was correct. The court interpreted the term "shall" in §112.2 of the Uniform Statewide Building Code as mandatory rather than permissive, and held that the building official must issue a notice of violation, rather than take an informal approach

Virginia Administrative Code
Title 13. Housing
Agency 5. Department of Housing and Community Development
Chapter 63. Virginia Uniform Statewide Building Code

13VAC5-63-150. Section 115 Violations.

A. Section 115.1 Violation a misdemeanor; civil penalty. In accordance with § 36-106 of the Code of Virginia, it shall be unlawful for any owner or any other person, firm or corporation, on or after the effective date of any code provisions, to violate any such provisions. Any locality may adopt an ordinance that establishes a uniform schedule of civil penalties for violations of specified provisions of the code that are not abated or remedied promptly after receipt of a notice of violation from the local enforcement officer.

Note: See the full text of § 36-106 of the Code of Virginia for additional requirements and criteria pertaining to legal action relative to violations of the code.

B. Section 115.2 Notice of violation. The building official shall issue a written notice of violation to the responsible party if any violations of this code or any directives or orders of the building official have not been corrected or complied with in a reasonable time. The notice shall reference the code section upon which the notice is based and direct the discontinuance and abatement of the violation or the compliance with such directive or order. The notice shall be issued by either delivering a copy to the responsible party by mail to the last known address or delivering the notice in person or by leaving it in the possession of any person in charge of the premises, or by posting the notice in a conspicuous place if the person in charge of the premises cannot be found. The notice of violation shall indicate the right of appeal by referencing the appeals section. When the owner of the building or structure, or the permit holder for the construction in question, or the tenants of such building or structure, are not the responsible party to whom the notice of violation is issued, then a copy of the notice shall also be delivered to the such owner, permit holder or tenants.

C. Section 115.2.1 Notice not to be issued under certain circumstances. When violations are discovered more than two years after the certificate of occupancy is issued or the date of initial occupancy, whichever occurred later, or more than two years after the approved final inspection for an alteration or renovation, a notice of violation shall only be issued upon advice from the legal counsel of the locality that action may be taken to compel correction of the violation. When compliance can no longer be compelled by prosecution under § 36-106 of the Code of Virginia, the building official, when requested by the building owner, shall document in writing the existence of the violation noting the edition of the USBC the violation is under.

D. Section 115.3 Further action when violation not corrected. If the responsible party has not complied with the notice of violation, the building official shall submit a written request to the legal counsel of the locality to institute the appropriate legal proceedings to restrain, correct or abate the violation or to require the removal or termination of the use of the building or structure involved. In cases where the locality so authorizes, the building official

may issue or obtain a summons or warrant. Compliance with a notice of violation notwithstanding, the building official may request legal proceedings be instituted for prosecution when a person, firm or corporation is served with three or more notices of violation within one calendar year for failure to obtain a required construction permit prior to commencement of work subject to this code.

Note: See § 19.2-8 of the Code of Virginia concerning the statute of limitations for building code prosecutions.

E. Section 115.4 Penalties and abatement. Penalties for violations of the USBC shall be as set out in § 36-106 of the Code of Virginia. The successful prosecution of a violation of the USBC shall not preclude the institution of appropriate legal action to require correction or abatement of a violation.

F. Section 115.5 Transfer of ownership. In accordance with § 36-105 of the Code of Virginia, if the local building department has initiated an enforcement action against the owner of a building or structure and such owner subsequently transfers the ownership of the building or structure to an entity in which the owner holds an ownership interest greater than 50%, the pending enforcement action shall continue to be enforced against the owner.

Statutory Authority
§ 36-98 of the Code of Virginia.

Historical Notes
Derived from Virginia Register Volume 22, Issue 3, eff. November 16, 2005; amended, Virginia Register Volume 24, Issue 14, eff. May 1, 2008; Volume 27, Issue 2, eff. March 1, 2011; Change in Effective Date, 27:5 VA.R. 534 November 8, 2010.

Chesterfield County, Virginia
Local Board of Building Code Appeals

9800 Government Center Parkway – P.O. Box 40 – Chesterfield, VA 23832
Phone: (804) 748-1057 – Fax: (804) 751-2249 – Internet: chesterfield.gov

Jack R. Wilson, III
Chairman

Pat Kindervater
Secretary to Board

DECISION RESOLUTION
November 30, 2016 Hearing
Thorpe Appeal

WHEREAS, the Chesterfield County Local Board of Building Code Appeals (LBBCA) is duly appointed by the Chesterfield County Board of Supervisors to resolve disputes arising from enforcement of the Uniform Statewide Building Code (USBC), Statewide Fire Prevention Code (SFPC) and the Virginia Amusement Device Regulations (VADR), and

WHEREAS, an appeal via letter dated October 23, 2016 was filed with the LBBCA by Greg and Leah Thorpe regarding decisions of the building official documented in an email from Building Official Richard C. Witt dated September 30, 2016 regarding the single family dwelling owned by Greg and Leah Thorpe located at 16300 Longlands Road Chesterfield, VA; and

WHEREAS, a hearing was held before the LBBCA on November 30, 2016 to consider the appeal, and,

WHEREAS, the LBBCA has fully deliberated this matter and rendered decisions by concurring vote of a majority of the LBBCA members present; now, therefore, be it

RESOLVED, by the LBBCA, that in the matter of the Thorpe appeals case, pursuant to USBC section 119.7, the decisions of the code official documented in the September 30, 2016 email from Mr. Witt to Mr and Mrs Thorpe have been adjudicated as follows:

> The building official's decision that the required slope of the driveway required per USBC section R401 3 can end 10 feet from the building and that the USBC does not prohibit a swale in the driveway that diverts the runoff towards the storm water collection system in the street is UPHELD;
>
> The building official's decision to describe the cut-out portion of the I-joist at the bathtub floor drain as a "notch" regulated per USBC section R502 8 2 is UPHELD,
>
> The building official's decision that the attachment of a 2"x6" segment of lumber to the top of the bottom chord of a number of roof trusses is not a code violation per R802.10.4 and his decision per USBC 111.1 to accept the engineered detail prepared and sealed by James H. Fletcher P.E for the attachment of the 2"x6" segments of lumber to the top of the bottom truss chords are UPHELD;
>
> The building official's decisions establishing the compliance times in the August 3, 2016 letter of defect to Finer Homes, the September 16, 2016 letter of defect to Finer Homes, and the September 16, 2016 notice of violation to Finer Homes per USBC sections 113.6 and 115.2 are UPHELD,

AND, BE IT FURTHER RESOLVED that any person who was party to the appeal may appeal to the State Review Board by submitting an application to such board within 21 calendar days upon receipt by certified mail of this resolution. Application forms are available from the Office of the State Review Board, 600 East Main Street, Richmond, Virginia 23219, (804) 371-7150.

Jack R. Wilson, III
Chairman of Chesterfield Board of Appeals

December 7, 2016
Date

Chesterfield County
Department of Building Inspection
9800 Government Center Parkway
P.O. Box 40
Chesterfield, VA 23832

CERTIFIED MAIL

7005 1820 0002 4439 0827

Gregory H & Leah B. Thorpe
16300 Longlands Road
Chesterfield, VA 23832

12-14

1st NOTICE 12-19
2nd NOTICE 12-24
RETURNED

7005 1820 0002 4439 0827

OPEN THE RIGHT

Chesterfield County, Virginia
Local Board of Building Code Appeals

9800 Government Center Parkway – P.O. Box 40 – Chesterfield, VA 23832
Phone: (804) 748-1057 – Fax: (804) 751-2249 – Internet: chesterfield.gov

Jack R. Wilson, III
Chairman

Pat Kindervater
Secretary to Board

HEARING MINUTES
November 30, 2016

A request for an appeal hearing was submitted by property owners Greg and Leah Thorpe in a letter dated October 23, 2016 (attached). The appeal case concerns decisions of the building official with regards to construction defects at the Thorpe's residence at 16300 Longlands Road, Chesterfield, VA 23832.

Mr. Jack Wilson, Chairman, called the hearing to order at 5:55 p.m. in the Multi-purpose room of the Community Development Building with the following board members present:

Michael Bricker	James Ingle
Stephen H. Conner	James Kester
R. Christian Eudailey	Jack R. Wilson, III

Secretary to the Board Pat Kindervater and her assistant Erin White were also present.

The following county representatives were present:

Richard C. Witt, Director of Building Inspection
Ronald W. Clements, Jr., Assistant Director of Building Inspection
Chris Davis, Chief of Residential Inspections
Tara McGee, Senior Assistant County Attorney

The appellants, Greg and Leah Thorpe, were present.

The home builder, Greg Holt with Finer Homes was also present.

Chairman Wilson instructed the appellant on the appeal process.

Mr. and Mrs. Thorpe presented their case and explained in detail their objection to decisions Building Official Rick Witt had rendered with regards to: driveway drainage, a floor joist cut-out to accommodate a bathtub drain pipe, alteration of roof trusses, compliance times granted to the builder. Mrs. Thorpe showed a slide on the truss issue and provided various exhibits to the board members.

Assistant Building Official Ron Clements presented the case for the Building Inspection department. He presented an exhibit supported by three slides and explained the county's position on each appealed decision. Additionally, Building Official Rick Witt spoke to the appeal of the compliance times provided, stating that we always work towards code compliance and try to give individuals time to make necessary repairs.

The appeal request letter and all exhibits are available in the LBBCA Thorpe appeal case record maintained by the secretary to the LBBCA.

The LBBCA discussed each of the four items addressed in the appeal (driveway drainage, a floor joist cut-out to accommodate a bathtub drain pipe, alteration of roof trusses, compliance times granted to the builder). During the LBBCA deliberations some questions were asked of the appellant and county representatives.

The LBBCA concluded deliberations.

Chairman Wilson called for an individual motion on each of the four items listed in the Thorpe's letter of appeal.

The motions were made, seconded and dispensed as follows:

- **Driveway Drainage**- Motion to deny appeal (uphold the building official's decision) Motion passed 5 yeas, 0 nays, chair did not vote
- **Floor joist cut-out for a bathtub drain pipe**- Motion to deny appeal (uphold the building official's decision) Motion passed 5 yeas, 0 nays, chair did not vote
- **Truss alteration to build up bottom chord depth**- Motion to deny appeal (uphold the building official's decision) Motion passed 4 yeas, 1 nay, chair did not vote, Eudailey dissenting vote.
- **Compliance times**- Motion to deny appeal (uphold the building official's decision) Motion passed 5 yeas, 0 nays, chair did not vote

The hearing was adjourned at 8:05 p.m.

Attachment #1

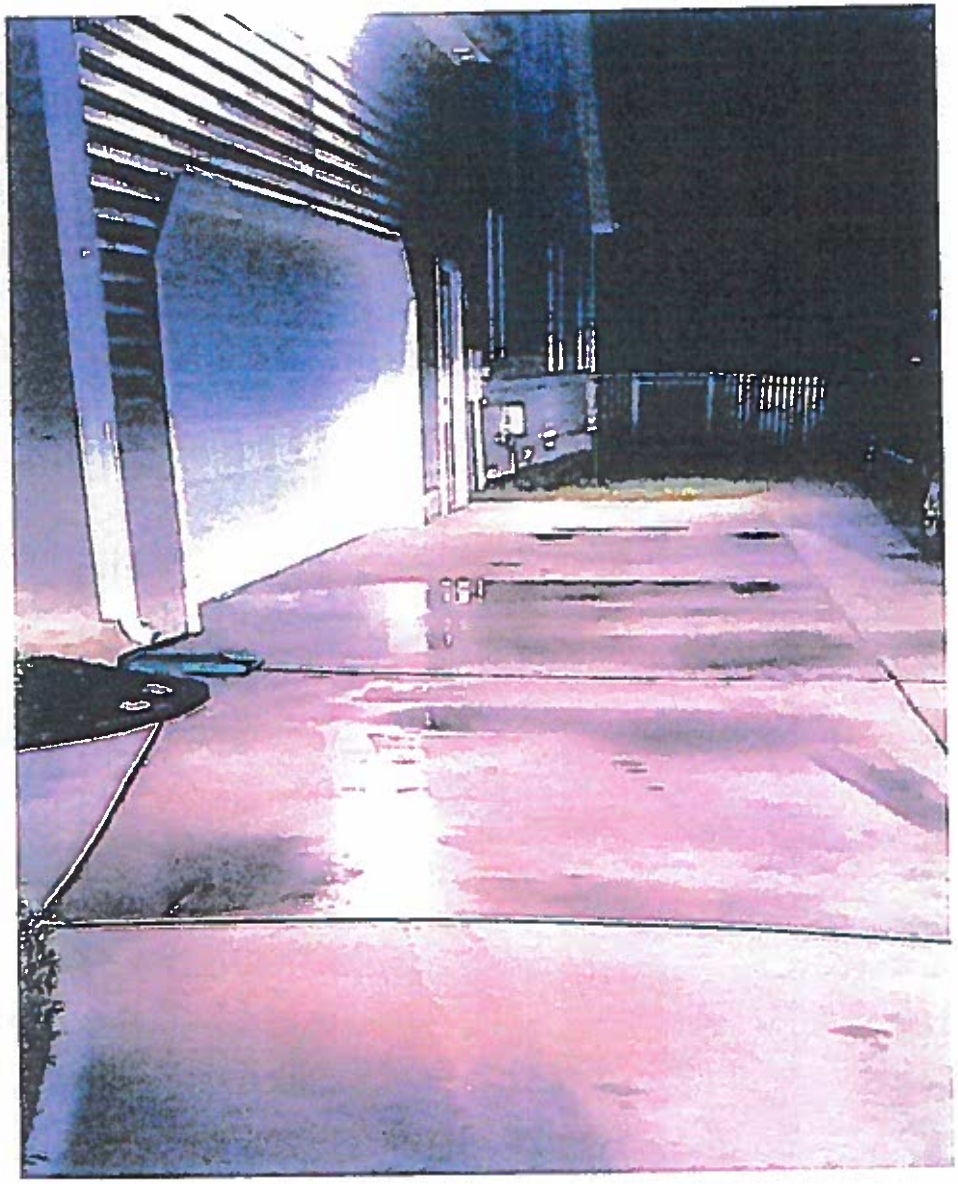

Attachment #2

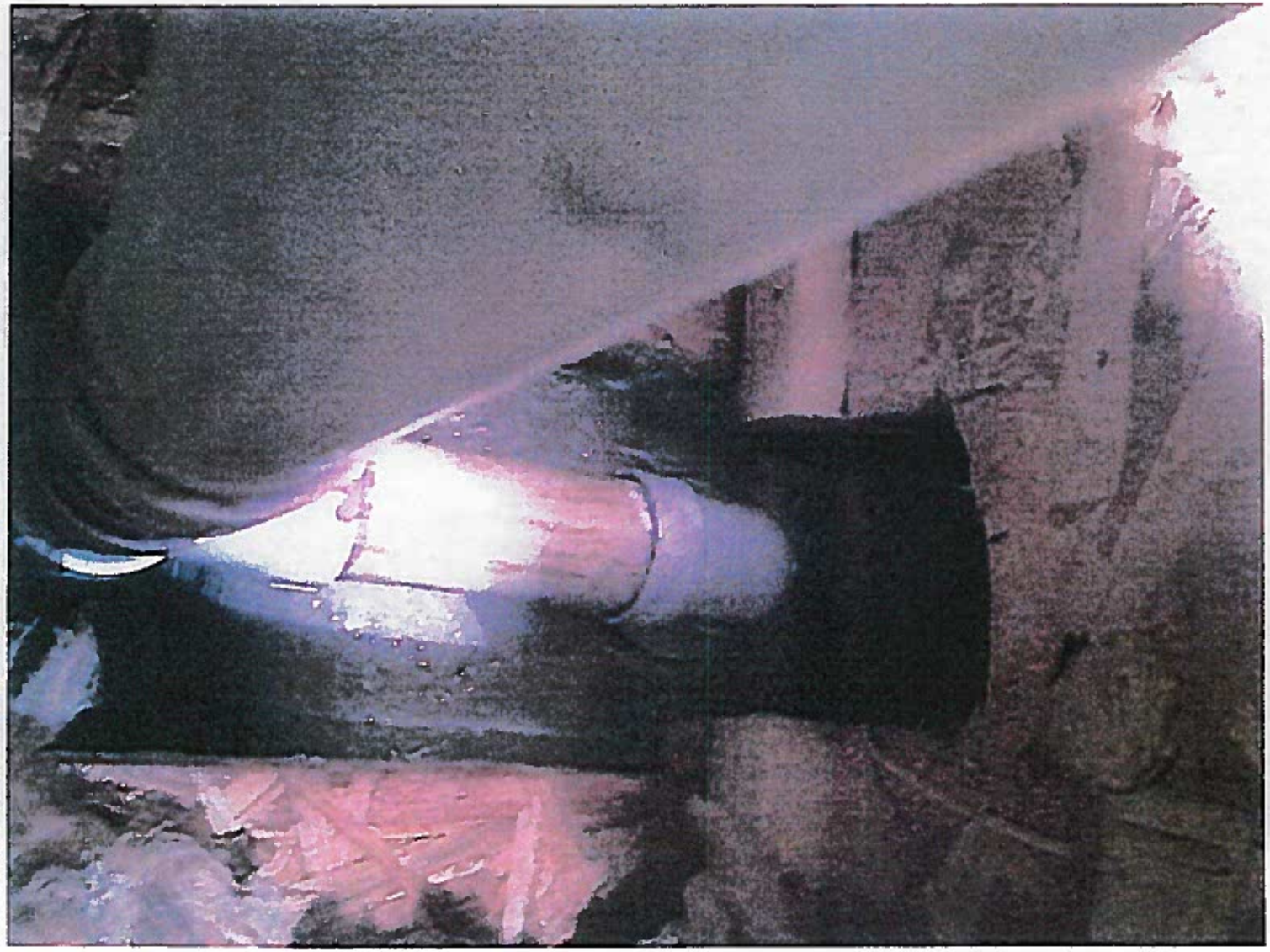

Attachment #3A

Job	Truss	Truss Type	Qty	Ply	SAVANNAH W/ ROG & PART ATTIC
25917	T-1VX	COMMON	6	1	Job Reference (optional)

Structural Technologies, Doswell, VA 23047 — Run: 7.600 s Oct 3 2014 Print: 7.600 s Oct 3 2014 MiTek Industries, Inc. Fri Mar 20 14:58:35 2015 Page 1

ID:hNGGyXDZHd0w4QHrgvER7yOsfP-F7B1R4QEncIPWO6q8UA0McLs89bARVKgu63DzZ0k8

2-0-0	8-7-12	14-5-10	21-0-0	28-4-12	34-11-8	42-0-0
1-9-0	6-7-12	6-9-14	6-6-6	7-4-12	6-6-13	7-0-7

5x5 =

Scale = 1:77.3

Attachment 3B

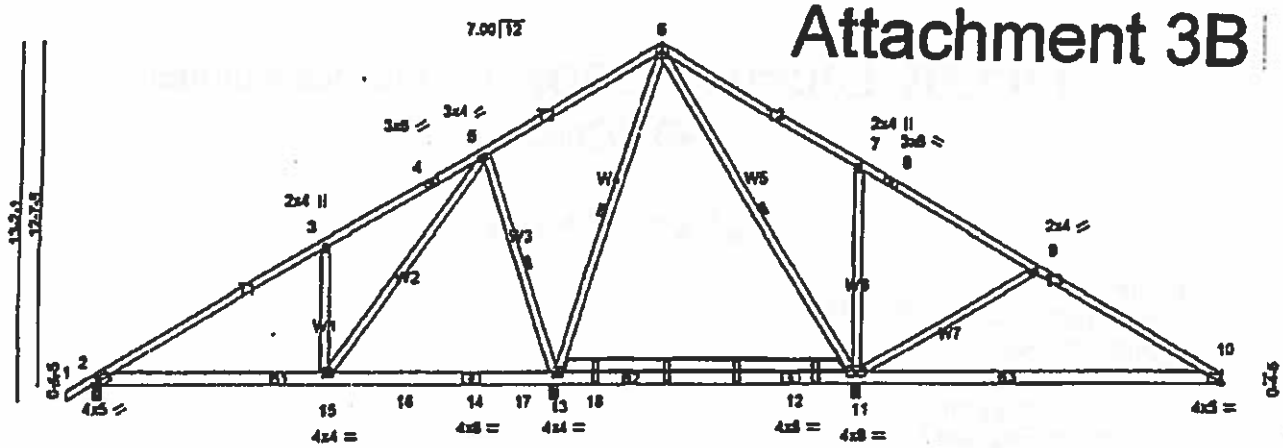

8-7-12	17-1-4	28-4-12	42-0-0
8-7-12	8-5-8	11-3-8	13-7-4

Plate Offsets (X,Y)-- [2:0-3-3,0-1-14], [10:0-1-4,0-0-3]

LOADING (psf)		SPACING- 2-0-0		CSI.		DEFL.	in	(loc)	l/def	L/d	PLATES	GRIP
TCLL	20.0	Plate Grip DOL	1.15	TC	0.76	Vert(LL)	-0.36	10-11	>448	240	MT20	244/190
TCDL	10.0	Lumber DOL	1.15	BC	0.89	Vert(TL)	-0.67	10-11	>242	180		
BCLL	0.0 *	Rep Stress Incr	YES	WB	0.54	Horz(TL)	0.01	10	n/a	n/a		
BCDL	10.0	Code IRC2009/TPI2007		(Matrix)							Weight: 268 lb	FT = 5%

LUMBER-
TOP CHORD 2x4 SP No.2
BOT CHORD 2x8 SP No.2 *Except*
B3: 2x8 SP No.1D
WEBS 2x4 SP No.3

STACH (1) 2X6 ATOP BOTTOM CHORD AS SHOWN. ATTACH W/ 2X4 X 11" BLOCKS SET 36" OC ONE FACE. USE (4) 16D BOX NAILS EACH MEMBER EACH CONNECTION.

BRACING-
TOP CHORD Structural wood sheathing directly applied or 5-2-7 oc purlins.
BOT CHORD Rigid ceiling directly applied or 8-0-0 oc bracing. Except:
10-0-0 oc bracing: 2-15.
WEBS 1 Row at midpt 5-13, 6-13, 6-11

MiTek recommends that Stabilizers and required cross bracing be installed during truss erection, in accordance with Stabilizer Installation guide.

REACTIONS. (lb/size) 2=815/0-4-0, 13=1657/0-3-8, 11=1246/0-3-8, 10=366/Mechanical
Max Horz 2=293(LC 5)
Max Uplift2=-81(LC 6), 13=-215(LC 6), 11=-235(LC 7), 10=-21(LC 7)
Max Grav 2=820(LC 10), 13=1657(LC 1), 11=1250(LC 11), 10=397(LC 11)

FORCES. (lb) - Maximum Compression/Maximum Tension
TOP CHORD 1-2=0/33, 2-3=-653/68, 3-4=-813/165, 4-5=-455/197, 5-6=-42/402, 6-7=-1/324, 7-8=-38/327, 8-9=-73/144, 9-10=-343/58
BOT CHORD 2-15=-137/448, 15-16=-94/191, 14-16=-94/191, 14-17=-94/191, 13-17=-94/191, 13-18=-137/233, 12-18=-137/233, 11-12=-137/233, 10-11=-14/214
WEBS 3-15=-435/211, 5-15=-218/877, 5-13=-703/258, 6-13=-538/34, 6-11=-170/0, 7-11=-458/225, 9-11=-412/189

NOTES-
1) Unbalanced roof live loads have been considered for this design.
2) Wind: ASCE 7-05; 90mph; TCDL=6.0psf; BCDL=5.0psf; h=25ft; Cat. II; Exp B; enclosed; MWFRS (low-rise) gable end zone and C-C Exterior(2) zone; cantilever left and right exposed ; end vertical left and right exposed;C-C for members and forces & MWFRS for reactions shown; Lumber DOL=1.15 plate grip DOL=1.15
3) This truss has been designed for a 20.0 psf bottom chord live load nonconcurrent with any other live loads.
4) * This truss has been designed for a live load of 20.0psf on the bottom chord in all areas where a rectangle 3-6-0 tall by 2-0-0 wide will fit between the bottom chord and any other members, with BCDL = 10.0psf.
5) Refer to girder(s) for truss to truss connections.
6) Provide mechanical connection (by others) of truss to bearing plate capable of withstanding 81 lb uplift at joint 2, 215 lb uplift at joint 13, 235 lb uplift at joint 11 and 21 lb uplift at joint 10.
7) This truss is designed in accordance with the 2009 International Residential Code sections R502.11.1 and R802.10.2 and referenced standard ANSI/TPI 1.
8) "Semi-rigid pitchbreaks with fixed heels" Member end fixity model was used in the analysis and design of this truss.

LOAD CASE(S) Standard

COMMONWEALTH OF VIRGINIA
REPAIR
JAMES H. FLETCHER
June 16, 2016
No. 26629
PROFESSIONAL ENGINEER

Attachment 3C

DPOR License Lookup License Number 0402026629

License Details

Name
FLETCHER, JAMES HERMAN
License Number
0402026629
License Description
Professional Engineer License
Rank
Professional Engineer
Address
WILLIAMSBURG, VA 23188
Initial Certification Date
1996-01-30
Expiration Date
2018-01-31

Related Licenses [1]

License Number	License Holder Name	License Type	Relation Type	License Expiry
0407002701	BAY DESIGN	Business Entity Registration	Engineering	2017-12-31

Showing 1 to 1 of 1 entries

Attachment #4

Kindervater, William

From:	Leah Thorpe <leahbthorpe@gmail.com>
Sent:	Sunday, August 28, 2016 12:32 PM
To:	Nick Woodard
Cc:	gholt@finerhomesinc.net; Kindervater, William; Greg Thorpe
Subject:	Re: Concrete

Nick:

I accidentally sent the email you just received before I was finished.

3. In our contract with Finer Homes we are required to give any sub contractor that we call to come to our home a two week time span to fit us in to their schedule and if we have to cancel that appointment we have to give them 24 hours notice. It seems only fair that Finer Homes should have to abide by the requirements that they impose on the homeowner.

We do not feel that expecting Finer Homes to give us sufficient notice of appointment times unreasonable. We have been more than accommodating during this past year in the scheduling process. We are bending over backwards to accommodate Finer Homes when it should be the other way around.

We will be expecting to see you, Mr. Kindervator and Mr. Garlitz at our house tomorrow at 11:00 a.m. Please e-mail Greg and I if you can not keep this appointment.

Leah Thorpe

On Fri, Aug 26, 2016 at 2:17 PM, Nick Woodard <nwoodard@finerhomesinc.net> wrote:
We have spoken to mr kindervater and Garlitz and both are available to meet Monday at 11am at your house to inspect the driveway. Just want to make sure you guys are okay with us taking a look Monday.

Nick Woodard
Customer Service Supervisor
804-920-1966
Finer Homes Inc.

This email was part of 10 e-mails that were exchanged about scheduling the 4th meeting we have had about the driveway and is presented out of context.

Limited Access Storage Load

Often times, what the building code states is confusing at best. This is especially true when there are multiple footnotes describing when and where a load is to be applied. One such circumstance occurs with the attic limited access storage load, commonly referred to as the "42 inch live load" or "the BOCA load". Below is a quick summary of what the IRC states regarding this load:

Attics with limited access shall be designed to support 20 psf live load on the bottom chord of any truss "...with a web configuration capable of containing a rectangle 42 inches high or greater by 2 feet wide or greater..." This applies to areas that are accessible via a pull-down stairway or framed opening with a bottom chord pitch of less than 2/12 (IRC 2006, IRC2009), or an opening of 20 inches by 30 inches where there is at least 30 inches of clearance above the opening (IRC 2012). When the attic limited access live load applies, standard industry practice is to apply the live load concurrently with the greater of the actual imposed bottom chord dead load or 10 psf bottom chord dead load. This is required in certain editions of IRC.

When the live load is applicable, it is important to remember the exemptions to this loading requirement. The live load is not required when:

- The attic area is not accessible through a scuttle as described above.
- The 42 inch tall by 24 inch wide rectangle beneath the webbing does not align with adjacent web openings (less than 3 consecutive trusses with same open area).
- The bottom chord pitch is greater than 2/12
- The insulation depth is greater than the depth of the bottom chord.

Given that energy codes requires the use of insulation over livable spaces, it is likely that the 42 inch limited access live load will only be applicable to trusses over a non insulated garage. Please also note that there is no "insulation exemption" in IBC. Of course, it is important to remember to check with local codes as many jurisdictions modify the requirements of this load. If you have any questions regarding the applicability of the attic limited access storage load, please feel free to contact your MiTek engineer.

Bottom Chord Live Load

- Attics With Storage
  - Access by fixed stairs
  - 30-psf concurrent live load
- Attics With Limited Storage
  - Access only by scuttle opening or pull-down stairs
  - 42" clear height between bottom chord and web or top chord for a distance of 24"
  - 20-psf concurrent live load
- Attics Without Storage
  - 10-psf non-concurrent live load

Your "Everything" Team...
ITWBCG
ITW Building Components Group Inc.
...we're there for you!

Bottom Chord Live Load

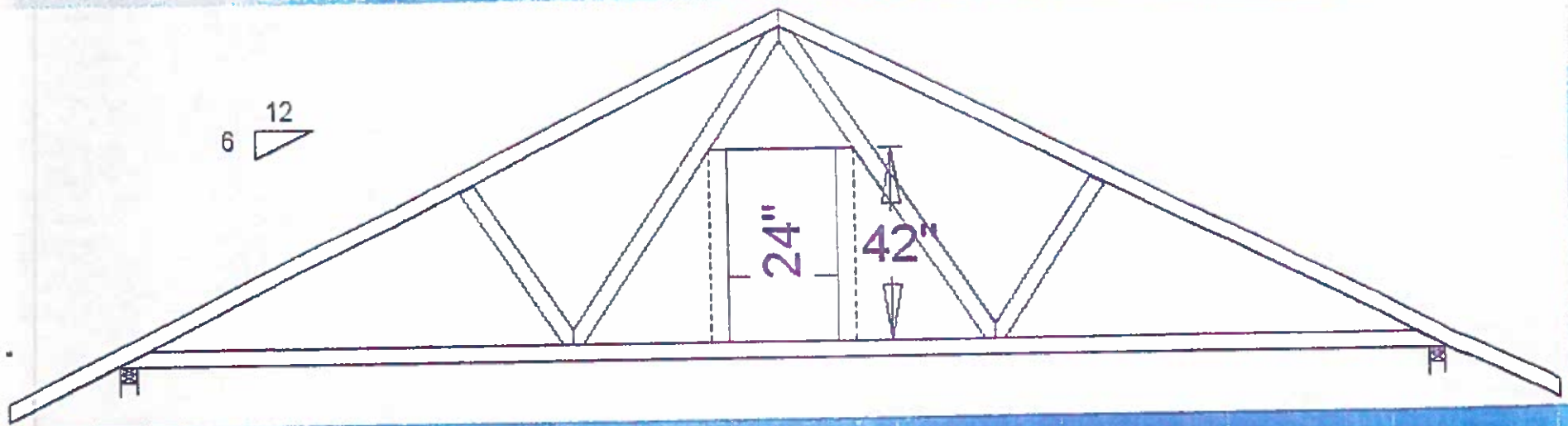

- 20-psf live load often referred to as BOCA load
  - Origin is in National Building Code (BOCA)
- Requires minimum clearance of 42" and minimum width of 24"
- Bottom chord pitch less than 2:12
- Concurrent with roof live load

Your "Everything" Team...
ITWBCG
ITW Building Components Group Inc.
...we're there for you!

Truss Bottom Chord Load Flow Chart per IRC 2006 for Attics

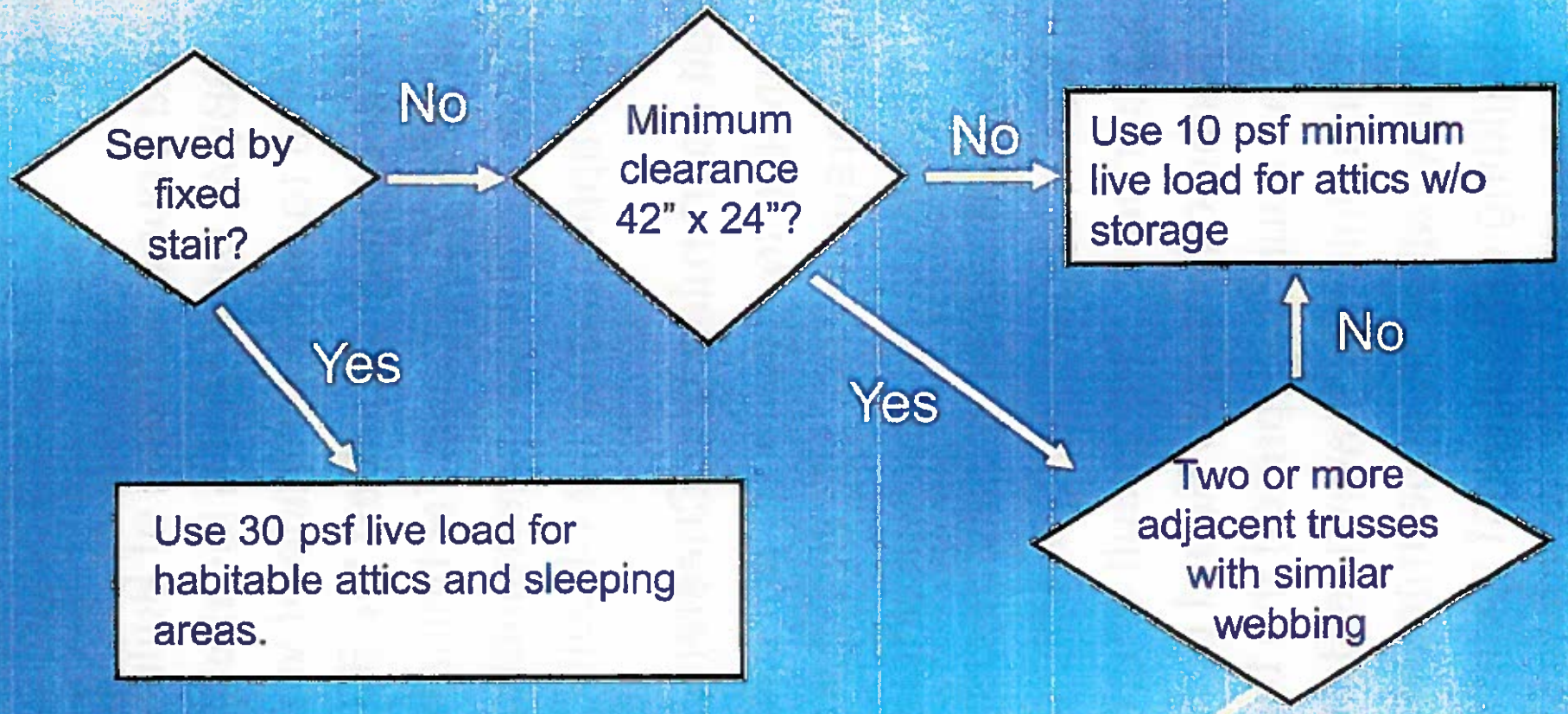

Use 20 psf live load for attics w/ limited storage in truss areas where clearance meets minimum requirements.

Your "Everything" Team...
ITWBCG
ITW Building Components Group Inc.
...we're there for you!

625. ***Chesterfield County v. Karnos*, 36 Va. Cir. 186 (1995).**

Chesterfield County's Board of Building Code Appeals (BBCA) ruled that a local building inspector had to issue a notice of violation on a builder. The County appealed the BBCA decision to the State Building Code Technical Review Board, which upheld the determination. The County then appealed to the Circuit Court.

The circuit court ruled that Chesterfield County lacked standing to appeal, as not being an aggrieved person within VA. CODE ANN. §9-6.14:16. The County's concern about not being able to pursue building code violations in its own informal way was held not a legally sufficient aggrieved concern. The circuit court also ruled that the Technical Review Board decision was correct. The court interpreted the term "shall" in §112.2 of the Uniform Statewide Building Code as mandatory rather than permissive, and held that the building official must issue a notice of violation, rather than take an informal approach.

Documents Submitted by Thorpe at February 17, 2017 Review Board Hearing

Bottom Chord Live Load

- Attics With Storage
  - Access by fixed stairs
  - 30-psf concurrent live load
- Attics With Limited Storage
  - Access only by scuttle opening or pull-down stairs
  - 42" clear height between bottom chord and web or top chord for a distance of 24"
  - 20-psf concurrent live load
- Attics Without Storage
  - 10-psf non-concurrent live load

G.T.L. Hoope Exhibit "A"
February 17, 2017 Review Bd. mtg.

Your "Everything" Team...
ITWBCG
ITW Building Components Group Inc.
...we're there for you!

SUB 1

Bottom Chord Live Load

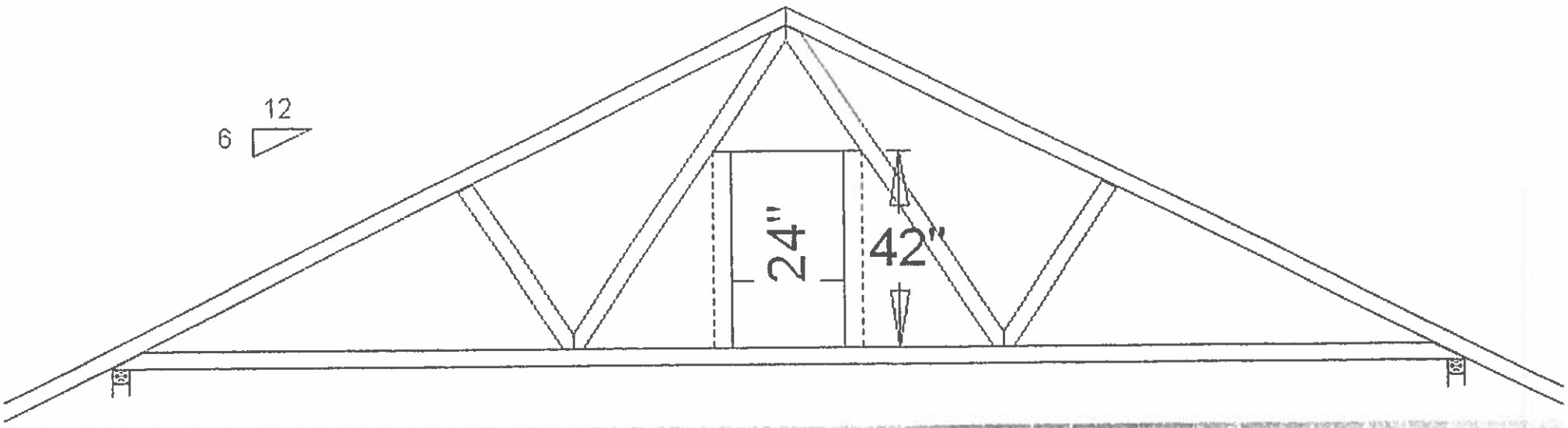

- 20-psf live load often referred to as BOCA load
  - Origin is in National Building Code (BOCA)
- Requires minimum clearance of 42" and minimum width of 24"
- Bottom chord pitch less than 2:12
- Concurrent with roof live load

Your "Everything" Team...
ITWBCG
ITW Building Components Group Inc.
...we're there for you!

Loaded attic shown to /Mr. Simmons-Structech

SUB 3

R

NOTES:
1. THIS IS A SPECIFIC REPAIR DETAIL TO BE USED ONLY FOR ITS ORIGINAL INTENTION. THIS REPAIR DOES NOT IMPLY THAT THE REMAINING PORTION OF THE TRUSS IS UNDAMAGED. THE ENTIRE TRUSS SHALL BE INSPECTED TO VERIFY THAT NO FURTHER REPAIRS ARE REQUIRED. WHEN THE REQUIRED REPAIRS ARE PROPERLY APPLIED, THE TRUSS WILL BE CAPABLE OF SUPPORTING THE LOADS INDICATED.
2. ALL MEMBERS MUST BE RETURNED TO THEIR ORIGINAL POSITIONS BEFORE APPLYING REPAIR AND HELD IN PLACE DURING APPLICATION OF THE REPAIR.
3. THE END DISTANCE, EDGE DISTANCE, AND SPACING OF NAILS SHALL BE SUCH AS TO AVOID UNUSUAL SPLITTING OF THE WOOD.
4. WHEN NAILING THE PLYWOOD GUSSETS AND/OR SCABS, THE USE OF A BACKUP WEIGHT IS RECOMMENDED TO AVOID LOOSENING OF THE CONNECTOR PLATES AT THE JOINTS OR SPLICES.

New 2x_ member (on edge) of No.2 grade or better added to the bottom chord. 2x_ members may be ripped an appropriate amount to accommodate the floor height required. On 2-ply trusses nail new members together prior to installation with two rows of 10D nails spaced 6" o.c.

2x4 or 2x6 Bottom Chord

Solid blocking or X-Bracing spaced 48" on center required when padding up the bottom chord greater than 0-7-4 past it's original height.

Attach d x 8"x 1/2" plywood (or 7/16" O.S.B.) APA rated sheathing to each face of truss (shaded area) w/ construction quality adhesive and (3) - 6d common wire nails (.113"x2") into original bottom chord and (5) - 6d common wire nails in new member from each side as shown. (Total - 16 nails)

* Maximum gusset spacing to be the lesser of 36" o.c. or the maximum Bottom Chord purlin spacing as shown on the individual Engineering Truss Drawings.

IMPORTANT
Original truss must be designed for the loads that will be imposed by the intended use which requires padding up the bottom chord. This repair is to be used only with trusses spaced at 24" o.c. maximum. Trusses not fitting these criteria should be examined individually.

REFER TO INDIVIDUAL TRUSS DESIGN FOR PLATE SIZES AND LUMBER GRADES

SUB 4

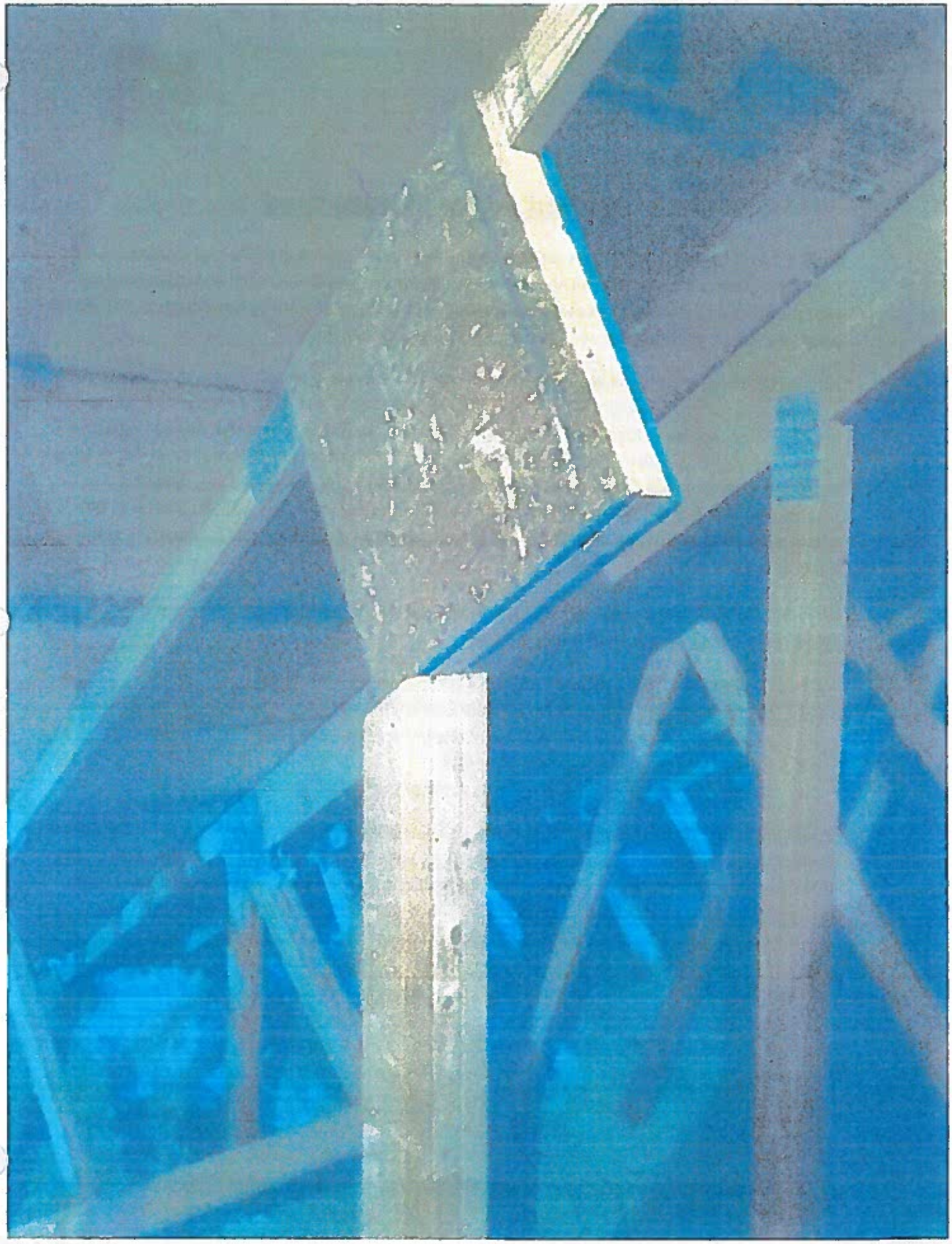

SURE

Limited Access Storage Load

Often times, what the building code states is confusing at best. This is especially true when there are multiple footnotes describing when and where a load is to be applied. One such circumstance occurs with the attic limited access storage load, commonly referred to as the "42 inch live load" or "the BOCA load". Below is a quick summary of what the IRC states regarding this load:

Attics with limited access shall be designed to support 20 psf live load on the bottom chord of any truss "...with a web configuration capable of containing a rectangle 42 inches high or greater by 2 feet wide or greater..." This applies to areas that are accessible via a pull-down stairway or framed opening with a bottom chord pitch of less than 2/12 (IRC 2006, IRC2009), or an opening of 20 inches by 30 inches where there is at least 30 inches of clearance above the opening (IRC 2012). When the attic limited access live load applies, standard industry practice is to apply the live load concurrently with the greater of the actual imposed bottom chord dead load or 10 psf bottom chord dead load. This is required in certain editions of IRC.

When the live load is applicable, it is important to remember the exemptions to this loading requirement. The live load is not required when:

- The attic area is not accessible through a scuttle as described above.
- The 42 inch tall by 24 inch wide rectangle beneath the webbing does not align with adjacent web openings (less than 3 consecutive trusses with same open area).
- The bottom chord pitch is greater than 2/12
- The insulation depth is greater than the depth of the bottom chord.

Given that energy codes requires the use of insulation over livable spaces, it is likely that the 42 inch limited access live load will only be applicable to trusses over a non-insulated garage. Please also note that there is no "insulation exemption" in IBC. Of course, it is important to remember to check with local codes as many jurisdictions modify the requirements of this load. If you have any questions regarding the applicability of the attic limited access storage load, please feel free to contact your MiTek engineer.

SuB E

178

Job	Truss	Truss Type	Qty	Ply	SAVANNAH W/ ROG & PART ATTIC
25917	T-1	ROOF SPECIAL	9	1	E10085072

Job Reference (optional)

Structural Technologies, Dosweil, VA 23047

7.640 s Apr 19 2016 MiTek Industries, Inc. Fri Dec 09 09:18:09 2016 Page 1

ID:hNjBGyXDZHd0w5OHrgvER7yOstP-KshWsRq4Quz4aaMEXsI0Byfa6ffBQFbwAU9yAhS

-1-0-0	7-1-15	13-10-4	21-0-0	28-1-12	35-5-7	41-10-0	47-0-0	48-0-0
1-0-0	7-1-15	6-8-5	7-1-12	7-1-12	7-3-11	6-4-9	5-2-0	1-0-0

REPAIR TO REPLACE DAMAGED WEB SECTION.

Scale = 1:90.7

REMOVE DAMAGED TOP SECTION OF WEB (5-17) FOR A MINIMUM OF 48" (ALL OF THE DAMAGED LUMBER SECTION MUST BE REMOVED AND THERE MUST BE A MINIMUM OF 36" OF GOOD LUMBER REMAINING AT THE BOTTOM SECTION OF THE WEB AND THE PLATES AT JOINT 17 MUST REMAIN FULLY EMBEDDED AND INTACT).
REPLACE REMOVED SECTION WITH 2 X 4 SPF NO 2 MATERIAL.

*PREVIOUS REPAIR ON RIGHT END E9555866

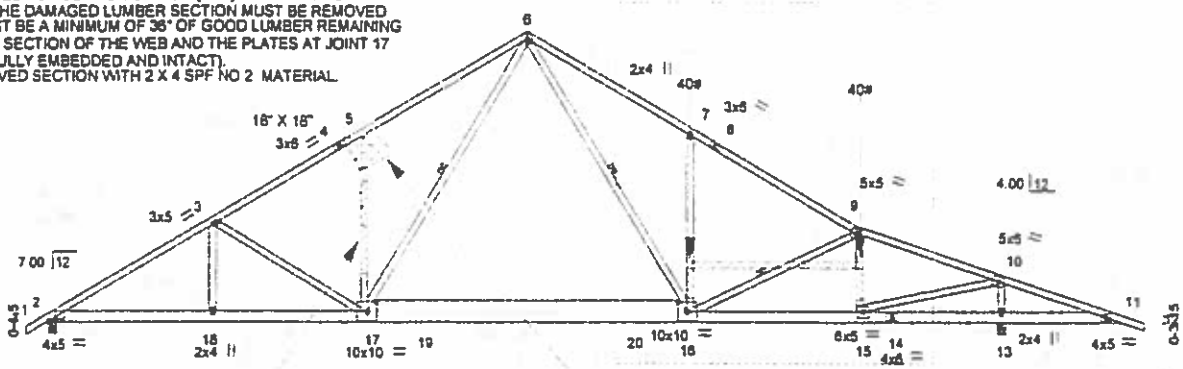

APPLY 2X4X4' SPF No 2 SCAB(S) TO EACH FACE OF TRUSS CENTERED ON SPLICE. ATTACH WITH 10d (3" X 0.131") NAILS PER THE FOLLOWING NAIL SCHEDULE:
2 x 4'S - 2 ROWS, 2 x 6'S AND LARGER - 3 ROWS: SPACED @ 4" O.C.
STAGGER NAIL SPACING FROM FRONT FACE AND BACK FACE FOR A NET 2" O.C. SPACING IN THE TRUSS. USE 3" MEMBER END DISTANCE.

ATTACH 1/2" PLYWOOD OR OSB GUSSET (15/32" RATED SHEATHING 32/16 EXP 1) TO EACH FACE OF TRUSS WITH 10d (3" X .131") NAILS DRIVEN THROUGH BOTH SHEETS OF PLYWOOD AND CLINCHED PER THE FOLLOWING NAIL SCHEDULE
2 x 4's - 2 ROWS, 2 x 6'S AND LARGER - 3 ROWS SPACED @ 4" O.C.
NAILS TO BE DRIVEN FROM BOTH FACES. STAGGER SPACING FROM FRONT TO BACK FACE FOR A NET 2" O.C. SPACING IN THE TRUSS. USE 3" MEMBER END DISTANCE.

7-1-15	13-10-4	28-1-12	35-5-7	41-10-0	42-0-0	47-0-0		
7-1-15	6-8-5	14-3-8	7-3-11	6-4-9	0-2-0	5-0-0		

Plate Offsets (X,Y)-- [2:0-3-4,0-1-3], [16:0-4-12,0-5-0], [17:0-4-12,0-5-0]

LOADING (psf)		SPACING-	2-0-0	CSI.		DEFL.	in	(loc)	l/defl	L/d	PLATES	GRIP
TCLL	20.0	Plate Grip DOL	1.15	TC	0.98	Vert(LL)	-0.27	16-17	>999	240	MT20	244/190
TCDL	10.0	Lumber DOL	1.15	BC	0.76	Vert(TL)	-0.54	16-17	>918	180		
BCLL	0.0 *	Rep Stress Incr	YES	WB	0.76	Horz(TL)	0.09	13	n/a	n/a		
BCDL	10.0	Code IRC2009/TPI2007		(Matrix)							Weight: 336 lb	FT = 5%

LUMBER-
TOP CHORD 2x4 SP No.1 *Except* 9-12,1-4: 2x4 SP No.2
BOT CHORD 2x6 SP No.2 *Except* 16-17: 2x12 SP No.2
WEBS 2x4 SP No.3 *Except* 10-15: 2x4 SP No.2

BRACING-
TOP CHORD Sheathed.
BOT CHORD Rigid ceiling directly applied or 6-0-0 oc bracing.
WEBS 1 Row at midpt 6-17, 6-16, 9-16

REACTIONS. (lb/size) 2=1907/0-4-0, 13=2417/0-4-0
Max Horz 2=-300(LC 4)
Max Uplift 2=-241(LC 6), 13=-410(LC 7)

County
rg Inspection

FORCES. (lb) - Maximum Compression/Maximum Tension
TOP CHORD 1-2=0/33, 2-3=-3219/394, 3-4=-2766/342, 4-5=-2584/378, 5-6=-2764/513, 6-7=-2759/496, 7-8=-2556/351, 8-9=-2755/327, 9-10=-2645/252, 10-11=-423/645, 11-12=0/22
BOT CHORD 2-18=-330/2681, 17-18=-331/2686, 17-19=-50/1632, 19-20=-50/1632, 16-20=-50/1632, 15-16=-167/2483, 14-15=-560/439, 13-14=-560/439, 11-13=-560/439
WEBS 3-18=0/340, 3-17=-468/159, 5-17=-438/214, 6-17=-268/1323, 6-16=-240/1304, 7-16=-487/238, 9-16=-281/79, 9-15=-805/201, 10-15=-553/3103, 10-13=-2187/487

NOTES-
1) Unbalanced roof live loads have been considered for this design.
2) Wind: ASCE 7-05; 90mph; TCDL=6.0psf; BCDL=3.0psf; h=25ft; Cat. II; Exp B; enclosed; MWFRS (low-rise) gable end zone and C-C Exterior(2) zone; cantilever left and right exposed ; end vertical left and right exposed;C-C for members and forces & MWFRS for reactions shown; Lumber DOL=1.15 plate grip DOL=1.15
3) This truss has been designed for a 20.0 psf bottom chord live load nonconcurrent with any other live loads.
4) * This truss has been designed for a live load of 20.0psf on the bottom chord in all areas where a rectangle 3-6-0 tall by 2-0-0 wide will fit between the bottom chord and any other members, with BCDL = 10.0psf.
5) Provide mechanical connection (by others) of truss to bearing plate capable of withstanding 241 lb uplift at joint 2 and 410 lb uplift at joint 13.
6) "Semi-rigid pitchbreaks with fixed heels" Member end fixity model was used in the analysis and design of this truss.
7) Hanger(s) or other connection device(s) shall be provided sufficient to support concentrated load(s) 40 lb down and 9 lb up at 28-1-12, and 40 lb down and 9 lb up at 35-7-10 on bottom chord. The design/selection of such connection device(s) is the responsibility of others.
8) In the LOAD CASE(S) section, loads applied to the face of the truss are noted as front (F) or back (B).

LOAD CASE(S) Standard
1) Dead + Roof Live (balanced) + Uninhab. Attic Storage: Lumber Increase=1.15, Plate Increase=1.15
Uniform Loads (plf)
Vert: 1-6=-60, 6-9=-60, 9-12=-60, 2-19=-20, 19-20=-60, 11-20=-20

COMMONWEALTH OF VIRGINIA
FRANK R. LASSITER
Lic. No. 034728
PROFESSIONAL ENGINEER

December 12,2016

Continued on page 2

WARNING - Verify design parameters and READ NOTES ON THIS AND INCLUDED MITEK REFERENCE PAGE MII-7473 rev. 10/03/2015 BEFORE USE.
Design valid for use only with MiTek® connectors. This design is based only upon parameters shown, and is for an individual building component, not a truss system. Before use, the building designer must verify the applicability of design parameters and properly incorporate this design into the overall building design. Bracing indicated is to prevent buckling of individual truss web and/or chord members only. Additional temporary and permanent bracing is always required for stability and to prevent collapse with possible personal injury and property damage. For general guidance regarding the fabrication, storage, delivery, erection and bracing of trusses and truss systems, see ANSI/TPI1 Quality Criteria, DSB-89 and BCSI Building Component Safety Information available from Truss Plate Institute, 218 N. Lee Street, Suite 312, Alexandria, VA 22314

ENGINEERING BY
TRENCO
A LAMINA AFFILIATE
818 Soundside Road
Edenton, NC 27932

SUB 7

25917	T-1VX	COMMON	6	1	Job Reference (optional)

Structural Technologies, Doswell, VA 23047 — Run: 7.600 s Oct 3 2014 Print: 7.600 s Oct 3 2014 MiTek Industries, Inc. Fri Mar 20 14:56:55 2015 Page 1

ID:NNjBGyXDZHd0w6CHsgvER7yOsIP-f?B1R4QBncIPWOfq6UA0McLs89bAfRVKgu63DzZ0k5

1-0-0 / 1-0-0 — 8-7-12 / 8-7-12 — 14-5-10 / 5-9-14 — 21-0-0 / 6-6-6 — 28-4-12 / 7-4-12 — 34-11-9 / 6-6-13 — 42-0-0 / 7-0-7

Scale = 1:77.3

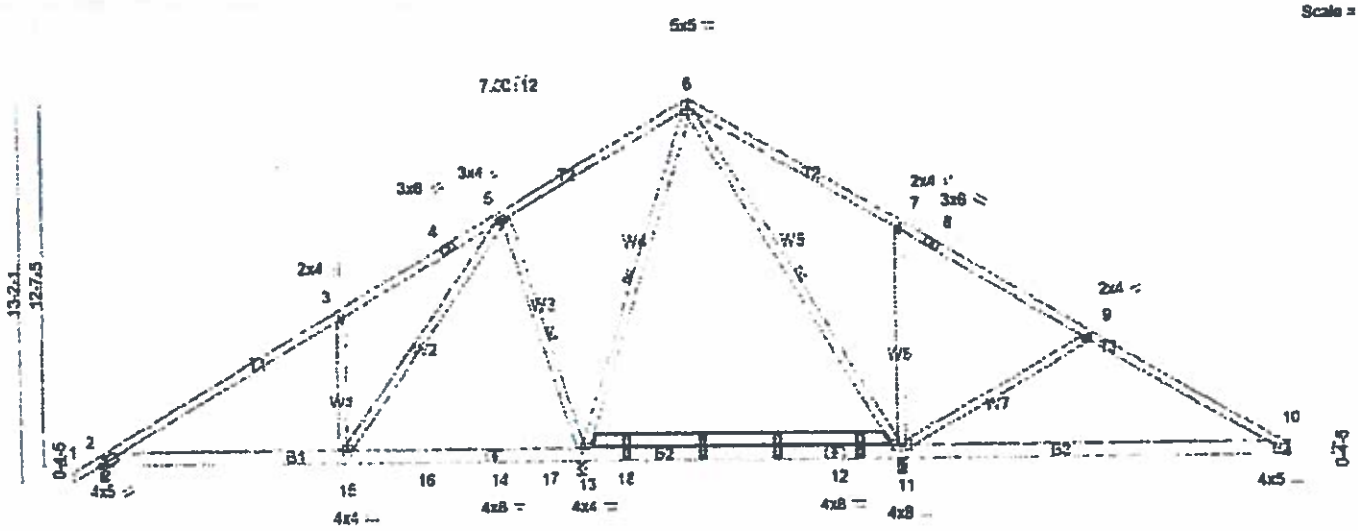

6-7-12 / 6-7-12	17-1-4 / 8-5-8	28-4-12 / 11-3-8	42-0-0 / 13-7-4

Plate Offsets (X,Y)-- [2:0-3-3,0-1-14], [10:0-1-4,0-0-3]

LOADING (psf)		SPACING-	2-0-0	CSI.		DEFL.	in	(loc)	l/defl	L/d	PLATES	GRIP
TCLL	20.0	Plate Grip DOL	1.15	TC	0.76	Vert(LL)	-0.38	10-11	>448	240	MT20	244/190
TCDL	10.0	Lumber DOL	1.15	BC	0.69	Vert(TL)	-0.67	10-11	>242	180		
BCLL	0.0 *	Rep Stress Incr	YES	WB	0.54	Horz(TL)	0.31	10	n/a	n/a		
BCDL	10.0	Code IRC2009/TPI2007		(Matrix)							Weight: 268 lb	FT = 5%

'MBER-
P CHORD 2x4 SP No.2
BOT CHORD 2x6 SP No.2 "Except" B3: 2x6 SP No.1D
WEBS 2x4 SP No.3

STACH (1) 2X6 ATOP BOTTOM CHORD AS SHOWN. ATTACH W/ 2X4 X 11" BLOCKS SET 36" OC ONE PACE. USE (4) 16D BOX NAILS EACH MEMBER EACH CONNECTION.

BRACING-
TOP CHORD Structural wood sheathing directly applied or 5-2-7 oc purlins.
BOT CHORD Rigid ceiling directly applied or 6-0-0 oc bracing. Except: 10-0-0 oc bracing: 2-15.
WEBS 1 Row at midpt 5-13, 6-13, 6-11

MiTek recommends that Stabilizers and required cross bracing be installed during truss erection, in accordance with Stabilizer Installation guide.

REACTIONS. (lb/size) 2=815/0-4-0, 13=1657/0-3-8, 11=1248/0-3-8, 10=386/Mechanical
Max Horz2=293(LC 5)
Max Uplift2=-81(LC 6), 13=-215(LC 6), 11=-235(LC 7), 10=-21(LC 7)
Max Grav2=820(LC 10), 13=1657(LC 1), 11=1250(LC 11), 10=397(LC 11)

FORCES. (lb) - Maximum Compression/Maximum Tension
TOP CHORD 1-2=0/33, 2-3=-653/68, 3-4=-813/185, 4-5=-455/197, 5-6=-42/402, 6-7=-1/324, 7-8=-36/327, 8-9=-73/144, 9-10=-343/58
BOT CHORD 2-15=-137/448, 15-16=-94/191, 14-16=-94/191, 14-17=-94/191, 13-17=-94/191, 13-18=-137/233, 12-18=-137/233, 11-12=-137/233, 10-11=-14/214
WEBS 3-15=-435/211, 5-15=-219/877, 5-13=-703/256, 6-13=-539/34, 6-11=-170/0, 7-11=-458/225, 9-11=-412/189

NOTES-
1) Unbalanced roof live loads have been considered for this design.
2) Wind: ASCE 7-05; 90mph; TCDL=6.0psf; BCDL=3.0psf; h=25ft; Cat. II; Exp B; enclosed; MWFRS (low-rise) gable end zone and C-C Exterior(2) zone; cantilever left and right exposed ; end vertical left and right exposed;C-C for members and forces & MWFRS for reactions shown; Lumber DOL=1.15 plate grip DOL=1.15
3) This truss has been designed for a 20.0 psf bottom chord live load nonconcurrent with any other live loads.
4) * This truss has been designed for a live load of 20.0psf on the bottom chord in all areas where a rectangle 3-6-0 tall by 2-0-0 wide will fit between the bottom chord and any other members, with BCDL = 10.0psf.
5) Refer to girder(s) for truss to truss connections.
6) Provide mechanical connection (by others) of truss to bearing plate capable of withstanding 81 lb uplift at joint 2, 215 lb uplift at joint 13, 235 lb uplift at joint 11 and 21 lb uplift at joint 10.
7) This truss is designed in accordance with the 2009 International Residential Code sections R502.11.1 and R802.10.2 and referenced standard ANSI/TPI 1.
8) "Semi-rigid pitchbreaks with fixed heels" Member end fixity model was used in the analysis and design of this truss.

LOAD CASE(S) Standard

COMMONWEALTH OF VIRGINIA
REPAIR
JAMES H. FLETCHER
June 16, 2016
No. 26629
PROFESSIONAL ENGINEER

...chfield County
... of Building Inspection

SUB 9

Additional Documents Submitted by Thorpe

VIRGINIA:

BEFORE THE
STATE BUILDING CODE TECHNICAL REVIEW BOARD

IN RE: Appeal of Gregory & Leah Thorpe
Appeal No. 16-11

REVIEW BOARD STAFF DOCUMENT

Suggested Statement of Case History and Pertinent Facts

1. In June of 2015, Gregory and Leah Thorpe (Thorpe) purchased a single-family detached home at 16300 Longlands Road in Chesterfield County from Finer Homes, Inc. (Finer Homes), a licensed Class A contractor.

2. In June of 2016, the Chesterfield County Building Inspections Office (local code office), the agency responsible for the enforcement of Part I of the 2012 Virginia Uniform Statewide Building Code (Virginia Construction Code or VCC), conducted an inspection to address Thorpe's concerns about modifications made to the home's roof trusses.

3. As a result of the inspection, the local code office issued a Letter of Defect to Finer Homes to address violations of VCC Sections R303.3 (*Bathrooms)* concerning a hole in a bathroom vent; Section R401.3 (*Drainage)* on the lack of driveway slope; R802.10.4 (*Alteration to trusses)* on trusses altered for the installation of insulation,* a window and an HVAC platform; and P2609.2 (*Installation of materials)* on the improper installation of the master bath tub. The letter required compliance within thirty days.

4. In September of 2016, the local code office issued a second Letter of Defect to Finer Homes to address violations of VCC Sections R502.8.2 (*Engineered wood products)*

concerning a notch in the top chord of an engineered floor joist; and N1102.4.1 (*Building thermal envelope)* regarding an unsealed portion of the building envelope. The letter required compliance within sixty days.**

5. On the same day in September of 2016, the local code office issued a Notice of Violation to Finer Homes for VCC Sections R401.3 *(Drainage)* for the lack of slope at the home's concrete driveway; R502.6 (*Bearing)* for the lack of minimum bearing of floor joists at the foundation wall; R802.10.4 (*Alteration to trusses)* for roof trusses altered for the installation of a window and an HVAC platform. The notice required compliance within sixty days.

6. Later in September of 2016, the local code office emailed Thorpe to address several issues related to the Notice of Violation. Among other things, the office informed Thorpe: 1.) that the use of a swale beyond ten feet from the building to divert drainage was acceptable, 2.) that no code violation exist regarding an engineer's design on truss alternations, and 3.) that it extended Finer Homes' compliance time for the correction of violations to accommodate Thorpe's schedule. ***

7. In October of 2016, Thorpe filed an appeal with the Chesterfield County Local Board of Building Code Appeals (local appeals board) which heard the appeal in November of 2016 and ruled to uphold the local code office's decision.

8. Thorpe then filed an application for appeal with the Review Board.

Suggested Issues for Resolution

1. Whether to overturn the local code office's decision that the use of a swale or drain is not prohibited, per VCC Section R401.3 (*Drainage*), from diverting water towards the storm sewer beyond ten feet from the building, and the local appeals board's upholding of that decision.

2. Whether to overturn the local code office's decision that a violation of VCC ****
Section R803.10.4 (*Alteration to trusses*) does not exist concerning the altered roof trusses, and the local appeal board's upholding of that decision.

3. Whether to overturn the local code office's decision that a violation of VCC Section 111.1 (*When required*) does not exist concerning its decision to accept a registered design professional's design on truss alteration, and the local appeals board's upholding of that decisions. *****

4. Whether to overturn the local code office's decision that a violation of VCC Section 113.6 (*Approval or notice of defective work*) and 115.2 (*Notice of Violation*) does not exist concerning compliance times for the correction of code violations.

*** The alteration of the trusses was done so the entire attic could be floored. In other houses like ours that were constructed by Finer Homes all but two of the trusses with a 2x12 bottom chord were floored and the rest of the attic was not floored and insulation was blown in. Finer Homes continues to insist that the trusses were padded up so that insulation could be installed but it is common knowledge that in partial attics the insulation is blown in the areas that are not floored. I would also like to point out that the building inspector verbally notified Finer Homes of the violation in June. The Letter of Defect was not sent until I sent the attached email to Mr. Kindervater. In our opinion the Letter of Defect should have been a Letter of Violation since Finer Homes had already had a month to correct the defects.**

**** The second Letter of Defect and first Letter of Violation were only sent in response to the email sent to Mr. Kindervater on September 14, 2016 (attached).**

***** The increased compliance time was not to accommodate our schedule. In the LBBCA appeal hearing we gave ample evidence that we have been extremely accommodating when Finer Homes wanted to meet or perform repairs.**

****** I believe the code number should be R802.10.4**

******* And also to determine if section 111.1 is the correct code to apply to our concern and consider Sections 112.2, 112.3, and 112.3.1 as we feel these codes are applicable to our dispute.**

Gmail

Leah Thorpe <leahbthorpe@gmail.com>

Fwd: House Issues

6 messages

Leah Thorpe <leah_thorpe@ccpsnet.net> Wed, Jul 27, 2016 at 2:48 PM
To: Leah Thorpe <leahbthorpe@gmail.com>

Sent this e-mail to Mr. Kindervater on 7/27/16

Leah Thorpe
Bookkeeper
Monacan High School
11501 Smoketree Drive
N. Chesterfield, VA 23236
804-378-2480

---------- Forwarded message ----------
From: **Leah Thorpe** <leah_thorpe@ccpsnet.net>
Date: Wed, Jul 27, 2016 at 1:50 PM
Subject: House Issues
To: "Kindervater, William" <kindervaterw@chesterfield.gov>

Good Afternoon Mr. Kindervater:

I just wanted to let you know that Finer Homes has not addressed any of the building code violations on our home. According to the 2012 Virginia Construction Code, Section 115.2: "The building official shall issue a written notice of violation..... " I have attached the printout of that section of the code to this e-mail. Has Finer Homes been issued a written notice of violation? As of June 30, 2016 we have notified Finer Homes of all of the items that they need to address. They have been informed of many of these items long before June 30, 2016. The following items are the building code violations:

Replace the bath tub in the master bathroom that was installed incorrectly. Nick e-mailed us on June 14th that he had given the plumber our contact information and he would replace the bath tub when the Kohler bath tub that we specified but we have never been contacted by the plumber.

Replace concrete on driveway so there is a 2% slope away from the house as specified by code. We have notified Finer Homes of the problem months ago.

Fix large hole in the garage where HVAC duct penetrates crawl space.

Replace duct work from Master Bath vent fan - hole in duct work that we told Finer Homes about during construction.

Fix the HVAC platform in the attic using the repair drawing prepared and stamped by Frank Lassiter of Trenco.

Fix the insufficient bracing of the exterior wall of the attic as reported by the Jesse Wastler - the PE we hired to inspect the trusses according to an agreed upon repair drawing.

Fix the "padding up" of the bottom chord according to an agreed upon repair drawing.

When you came to the house on June 22nd to meet with me about some of these issues you indicated that there was no need for you to put it in writing that the padding up of the trusses was up to code because it already was in writing.....it passed inspection. The thing that bothers me about that is that all of these other things passed inspection also and yet they are not up to code.

I did a little research and according to one of the Technical & Code Development Specialists at the State Building Codes Office "The Virginia building code does not have prescriptive provisions addressing the actual way that the construction in question was done, so determining compliance would have to be by an analysis of loads and stresses. The code just has a performance statement when the actual method of construction is not addressed and the performance expectation set out would be that the method of construction would withstand all superimposed loads." It seems to me that if the engineer that designed the trusses told me to have Structural Technologies issue a repair drawing then the method of construction is not meeting the performance standard. Finer Homes did sent us a repair drawing stamped by a PE named James H. Fletcher which showed exactly what they did. When I called the company that Nick said he worked for the number was no longer in service. Also, the drawing that was submitted does not have the information on it that is required by the DPOR in the *REGULATIONS Governing Architects, Professional Engineers, Land Surveyors, Certified Interior Designers and Landscape Architects.*

Nick e-mailed us on Friday, July 15th saying that he and Greg were going to talk about the list we submitted on Monday and that he would be in contact with us to schedule repairs. That was 12 days ago and we have heard nothing more from him.

I would really appreciate it if you could let me know if Finer Homes has been given written notice of these code violations. This section of the code also indicates that the homeowner will receive a copy of the notice.

Thank you for your help.

Leah Thorpe

---

7 attachments

tub install.jpg
1053K

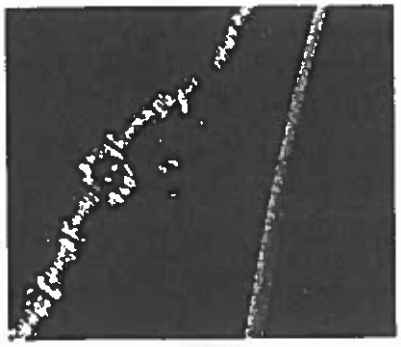

hole in duct.jpg
669K

garage water 2.JPG
752K

Hole in concrete blocks-garage.jpg
2173K

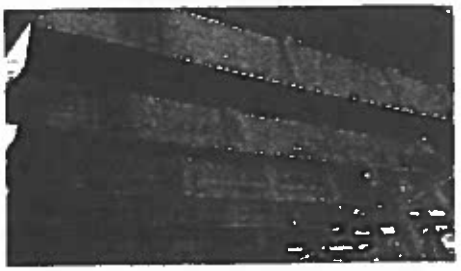

TRUSS MODIFICATION 5-23 1.jpg
1756K

HVAC in attic 5-7-15.jpg
1546K

Leah Thorpe <leah_thorpe@ccpsnet.net>

Attachments9/14/16

ɔ William, wittr, bcc: ghthorpe, bcc: Leah

Mr. Kindervater:

Finer Homes was sent a letter of Defect on August 3rd stating that they had 30 days to make the necessary repairs and corrections on seven code violations. It has been forty one days and they have only corrected the hole in the duct work and replaced the tub. In the process of replacing the tub they cut a floor joist which would add another defect to the list.

According to an e-mail from you, if they did not comply within thirty days they would be sent a Letter of Violation. Has that letter been sent? If so, could we receive a copy of it.

Nick Woodward is now telling us that you have approved the truss repair drawing stamped by James Fletcher and no repairs will be done for the padding up of the trusses. Is this correct? I was very confused when Nick e-mailed us that you had not seen the drawing stamped by James Fletcher before you sent the Letter of Defect and now that you had they were not going to repair the padding up of the trusses. When you came to our house on June 22nd and met with me I showed you the drawing and we discussed it at length. I showed you what little documentation I could find on Mr. Fletcher which included that he had worked at Bay Designs. You suggested I call there to see if he still worked there and even commented that you had seen the business because it was located on the route you took to the beach. The repair drawing by James Fletcher is not valid and does not comply with DPOR's standards. The engineer who prepared the truss drawings for our home based on the parameters provided by Structural Technologies is readily available. In fact, when I e-mailed him a picture of the the padded up trusses he wrote me back and told me to tell Structural Technologies to issue a repair drawing for the padding up of the trusses and the HVAC unit. His name is Frank Lassiter and he is the engineer that should issue all of the truss repair drawings because he directly supervised the original drawings.

I am still gathering information concerning whether we have to accept the unsightly fix that Finer Homes proposed for fixing the driveway drainage problem when you were here on August 29th with Nick Woodward and Jeff Coates of Galitz Concrete. I don't believe that the only remedy for a code violation is for the homeowner to have to accept the cheapest method the builder has of correcting the problem.

When I e-mailed you in July and asked if Finer Homes had received notice of the the code violations you said "Our policy has always been to verbally notify the contractor to try to obtain compliance and give them time to make the repairs, if they do not then we issue a Letter of Defect" . I would certainly be agreeable to this if Finer Homes was acting in good faith but they are not. According to the circuit courts decision in Chesterfield County vs Karnos, "the building official must issue a notice of violation, rather than take an informal approach". I have attached the specifics of the case.

My husband and I appreciate your help in this matter and are very anxious to get these code violations fixed.

Leah Thorpe

Gregory H. Thorpe
Leah B. Thorpe

Appeal No. 16-11
Thorpes Position on Appeal Items:

DRIVEWAY DRAINAGE:

Relief Sought by Thorpes:

We are asking the state to overturn the decision of the LBBCA to uphold the Building Officials interpretation of R401.3.

BUILDING OFFICIALS STATEMENTS REGARDING THIS ISSUE:

1. **Building Official Rick Witt's statement/decision regarding the driveway drainage(excerpt from the 9-30-16 e-mail to Thorpes)**

   Per the exception to USBC section R401.3, the driveway slope is required to be 2% away from the building within 10 feet of the building. The driveway is in violation of this provision. The violation is listed on the August 3, 2016 letter of defect and has not been corrected; therefore it is noted on the September 16, 2016 notice of violation. To comply with code the driveway must be sloped 2% away from the building within 10 feet of the building where the driveway abuts the building. The use of a swale beyond 10 feet from the building may be used to divert the drainage towards the street and storm water collection system for the sub-division. The first sentence of the exception allows the use of drains and swales as an alternative to providing the 6 inch in 10 foot (5%) slope if there are lot lines, barriers or slopes that would prevent achieving the slope. The second sentence stands on its own and permits a shallower 2% slope when the surface is impervious. This reduction in slope is allowed because the impervious surface provides less resistance to sheet flow. The 2% impervious allowance applies regardless of the qualifications that limit use of the first sentence. It is correct to state that if you do not have lot lines, barriers or slopes that would prevent achieving the 5% slope you cannot use a swale in place of the slope for the first 10 feet. Use of a swale or drain is not prohibited per R401.3 to divert the water towards the storm sewer system once you get beyond 10 feet from the building. This defect is still outstanding.

   R401.3 Drainage. Surface drainage shall be diverted to a storm sewer conveyance or other approved point of collection that does not create a hazard to the dwelling unit. Lots shall be graded to drain surface water away from foundation walls. The grade shall fall a minimum of 6 inches (152 mm) within the first 10 feet (3048 mm).

   Exception: ***Where lot lines, walls, slopes or other physical barriers prohibit 6 inches (152 mm) of fall within 10 feet (3048 mm)***, drains or swales shall be constructed to ensure drainage away from the structure. Impervious surfaces within 10 feet (3048 mm) of the building foundation shall be sloped a minimum of 2 percent away from the building.

2. Chesterfield BI interpretation of Code R401.3 presented at Thorpe Appeal Hearing before LBBCA on November 30, 2016:

2012 Virginia Residential Code section R401.3:

R401.3 Drainage.
Surface drainage shall be diverted to a storm sewer conveyance or other approved point of collection that does not create a hazard to the dwelling unit. Lots shall be graded to drain surface water away from foundation walls. The grade shall fall a minimum of 6 inches (152 mm) within the first 10 feet (3048 mm).

> **Exception:** Where lot lines, walls, slopes or other physical barriers prohibit 6 inches (152 mm) of fall within 10 feet (3048 mm), drains or swales shall be constructed to ensure drainage away from the structure. Impervious surfaces within 10 feet (3048 mm) of the building foundation shall be sloped a minimum of 2.0 percent away from the building.

Chesterfield BI interpretation:

The base requirement in R401.3 is for 6 inch fall for 10 feet adjacent to the structure, or 5% slope.
The exception is two separate exceptions.

1. **The first sentence** is an exception to both the 6 inch fall and the required fall for 10 feet when there is not enough space adjacent to the structure to achieve either the slope or distance. That sentence allows for use of a drain or swale to provide the intended drainage.

2. **The second sentence** is a separate exception that applies when there is 10 feet of space adjacent to the structure but the space, or a portion of the space, is covered with an impervious surface. That sentence allows for a reduction from 5% slope to 2% slope for an impervious surface that is less resistive to sheet flow.

3. Chesterfield County Responses to Relief Sought Issues, January 17, 2017

Driveway Drainage:

Relief Sought:

As we understand the relief sought statement from the Thorpes they contend that USBC section R401.3 provides a requirement for providing a "consistent slope" away from a house beyond the 10' distance from the house prescribed in section R401.3.

Chesterfield BI Position:

The relief sought is not supported by the code text of R401.3. There is no requirement in the USBC to provide a driveway, or to maintain a consistent slope of a driveway if one is provided. Once the slope of the surface grade, including driveways, adjacent to the house is provided with the prescribed fall for a distance 10' from the structure, a swale or other surface feature can be installed to divert water to an approved point of collection not creating a hazard to the foundation.

Thorpe's ~~Interpretation:~~ Position

The base requirement in this code is to make sure the lot is graded so that water flows away from the structure. The first sentence of the exception allows for the use of a drain or swale **if certain conditions exist**. Those conditions are if lot lines, walls, slopes, or other physical barriers prohibit the required fall within 10 feet of the structure. **Those conditions do not apply to**

our driveway. The second sentence addresses impervious surfaces. Our driveway is an impervious surface so the required slope away from the house is 2%. The **reasonable inference** when applying this code to our house would be that the driveway would slope 2% away from the house for the first ten feet and the remainder of the driveway would maintain a consistent slope. This would also be consistent with Virginia Code 55-70.1. We believe that a drain or swale in the middle of a driveway that could easily have a consistent slope to the sub-divisions storm sewer would not be considered to be constructed in a workmanlike manner, so as to pass without objection in the trade. The builder did not follow the requirements of the building code and then wanted to correct the code violation in the cheapest way possible. We also believe that just because the code does not expressly prohibit the use of a drain or swale beyond 10 feet of the structure that the **reasonable inference** would be that the driveway would have a consistent slope if lot lines, walls, slopes or other physical barriers did not prohibit the required fall.

Virginia Code 55-70.1

Implied warranties on new homes: *A. In every contract for the sale of a new dwelling, the vendor shall be held to warrant to the vendee that, at the time of the transfer of record title or the vendee's taking possession, whichever occurs first, the dwelling with all its fixtures is, to the best of the actual knowledge of the vendor or his agents, sufficiently (i) free from structural defects, so as to pass without objection in the trade, and (ii) constructed in a workmanlike manner, so as to pass without objection in the trade.*

REASONABLE INFERENCE LAW AND LEGAL DEFINITION

Reasonable inferences mean "conclusions which are regarded as logical by reasonable people in the light of their experience in life." [Lannon v. Hogan, 719 F.2d 518, 521 (1st Cir. Mass. 1983)]

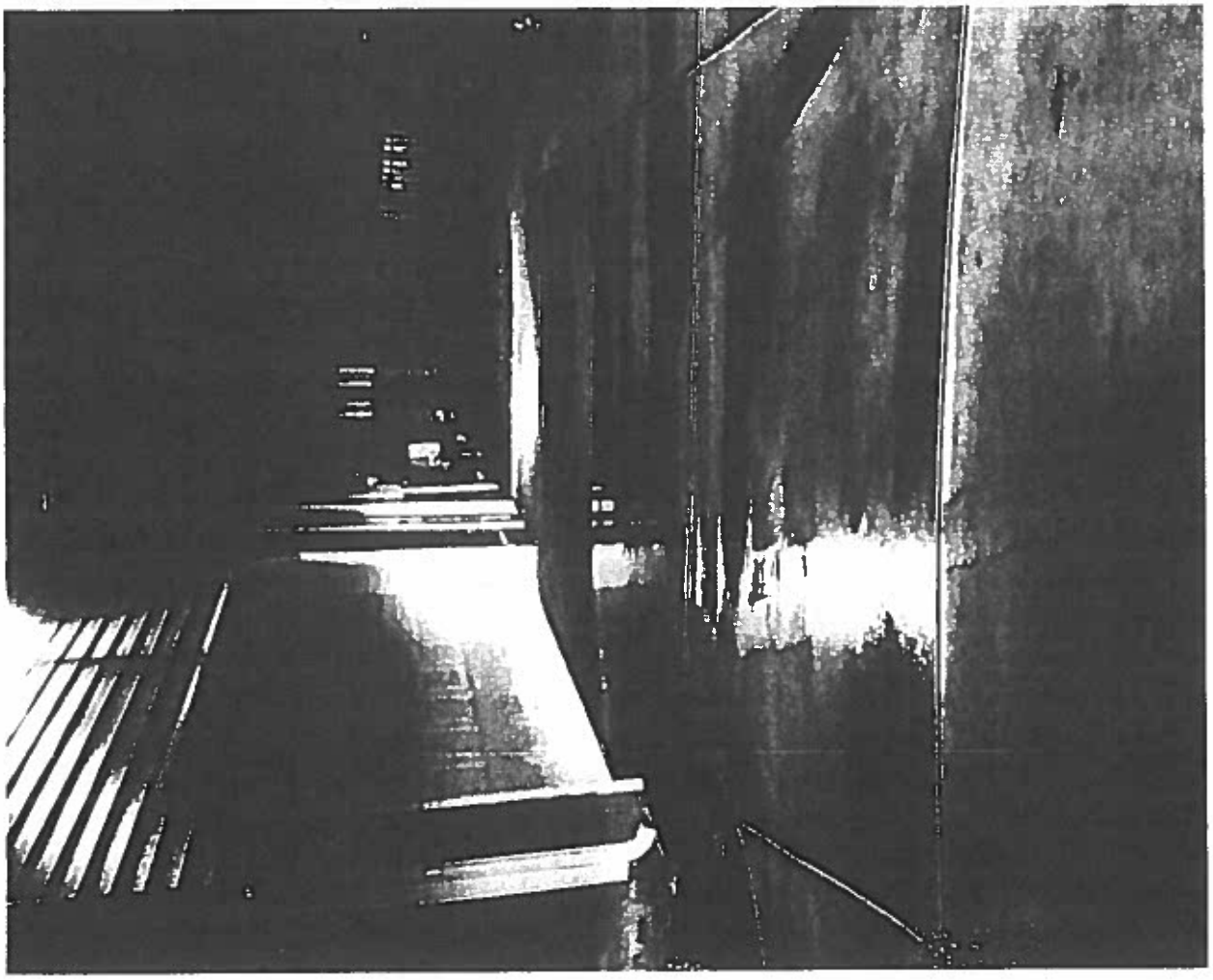

Gregory H. Thorpe
Leah B. Thorpe

Appeal No. 16-11
Thorpes Position on Appeal Items:

TRUSS ALTERATION TO BUILD UP BOTTOM CHORD DEPTH:

Relief Sought by Thorpes:

We are asking the state to overturn the decision of the LBBCA to uphold the Building Officials decision that per USBC 111.1 that the repair drawing submitted by Finer Homes and stamped by James Fletcher showing the attachment of the 2x6 segments to the top of the bottom truss chords is acceptable according to stated code. We also ask that the State overturn the decision of the LBBCA to uphold the building officials decision that a code violation does not exist concerning the truss alteration to build up the bottom chord of six roof trusses in order to place plywood flooring on the area and use it for attic space. We also ask the State to overturn the decision of the LBBCA to uphold the Building Officials decision that when a method of construction that is not prescriptive is used that all that the Building Official needs is a repair drawing stamped by any RDP to approve that method of construction.

BUILDING OFFICIALS STATEMENTS REGARDING THIS ISSUE:

1. **Building Official Rick Witt's statement/decision regarding the truss alteration (excerpt from the 9-30-16 e-mail to Thorpes):**

Truss alteration to build up the bottom cord depth (resolved):

This issue was cited in the August 3, 2016 letter of defect*. This condition is where some trusses were modified** "padded" to increase the depth of the truss bottom cords to accommodate insulation***. The padding was not installed to repair damage to the truss or increase the truss members load capacity. The Truss was originally designed for limited storage per section R301.6**** as detailed in the notes section of the truss design document. Such modifications of an engineered truss do not affect the load bearing capacity of the truss***** and approval by a registered design professional is not required******. Based on your concern Mrs. Thorpe, we did include the condition in our letter of defect. Finer Homes had Virginia licensed engineer James H. Fletcher verify and document that the "padding" of the truss bottom cord was acceptable and we accepted Mr. Fletcher's detail, seal dated June 16, 2016, in accordance with USBC 112.3. I understand that you have received input from other engineers******* with differing recommendations and opinions. After review of the other opinions******** that you have provided I have determined that there is no compelling evidence that their opinions have established a code violation or sufficiently called into question the determination of Mr. Fletcher, P.E. We have determined that this issue is not a code violation and is not referenced is the September 16, 2016 Letter of Violation.

* In the August 3, 2016 Letter of Defect it is cited as an alteration of the trusses.

** Modified is a synonym of altered

*** The trusses were padded so that plywood flooring could be laid to give the appearance of a large attic

**** Section R301.6 refers to roof live loads. The correct code section to cite is R301.5.

***** What proof does the Building Official have that the load carrying capacity is not affected?

****** According to R802.10.4 any alteration of a truss member requires the approval of a RDP.

******* One of the "other" engineers was the engineer that stamped the original truss drawings (email attached).

******** How did Mr. Witt review Mr. Lassiter's opinion when he has never talked to him.

2. Chesterfield BI interpretation of Codes R802.10.4, 111.1 and 112.3 presented at Thorpe Appeal Hearing before LBBCA on November 30, 2016:

R802.10.4 Alterations to trusses.
Truss members shall not be cut, notched, drilled, spliced or otherwise altered in any way without the approval of a registered design professional. Alterations resulting in the addition of load (e.g., HVAC equipment, water heater) that exceeds the design load for the truss shall not be permitted without verification that the truss is capable of supporting such additional loading.

Chesterfield BI Interpretation:
Nailing a 2x member to a truss that does not alter the load carrying capacity of the truss does not constitute a structural alteration that requires the approval of an RDP. *

* The first sentence of the code clearly states that "*Truss members shall not be cut, notched, drilled, spliced or otherwise altered* ***in any way*** *without the approval of a registered design professional.*" The second sentence references alterations that increase load. If the approval of an RDP was only needed if the alteration increased the load then the code could be written as follows: "*Truss members shall not be cut, notched, drilled, spliced or otherwise altered in any way that results in an addition to the load without the approval of a registered design professional.*"

112.3 Documentation and approval.
In determining whether any material, equipment, device, assembly or method of construction complies with this code, the building official shall approve items listed by nationally recognized testing laboratories, when such items are listed for the intended use and application, and in addition, may consider the recommendations of RDPs. **Approval shall be issued when the building official finds* that the proposed design is satisfactory and complies with the intent of the provisions of this code and that the material, equipment, device, assembly or method of construction offered is, for the purpose intended, at least the equivalent of that prescribed by the code****. Such approval is subject to all applicable requirements of this code and the material, equipment, device, assembly or method of construction shall be installed in accordance with the conditions of the approval and their listings. In addition, the building official may revoke such approval whenever it is discovered that such approval was issued in error or on the basis of incorrect information, or where there are repeated violations of the USBC.

111.1 When required.***
In accordance with Section 54.1-410 of the Code of Virginia and under the general authority of this code, the local building department shall establish a procedure to ensure that construction documents under Section 109**** are prepared by an RDP in any case in which the exemptions contained in Sections 54.1-401, 54.1-402 or 54.1-402.1 of the Code of Virginia are not applicable or in any case where the building official determines it necessary. When required under Section 54.1-402 of the Code of Virginia or when required by the building official, or both, construction documents shall bear the name and address of the author and his occupation*****.

Chesterfield BI Interpretation:
Section 112.3 provides the code official authority to consider recommendations of RDP's and provides the code official authority to determine****** if a proposed design is satisfactory and complies with the intent of the provisions of the code. Section 111.1 only requires the code official ensure documents required to be prepared by an RDP are so prepared. If the plan is sealed by an RDP that is currently licensed by DPOR we have no authority to reject the design because the building element was initially designed by another RDP. We do not have authority to regulate the practice of engineering. The APELSCIDLA Board regulations for engineers are enforced by DPOR.

* The definition of "find" is to discover by study or experiment

** This sentence specifically **requires** that the Building Official **determine** that, in our case, the method of construction is satisfactory and complies with the intent of the provisions of the code.

*** It is clear from R802.10.4 that a drawing prepared by an RDP is required.

**** This section references the initial construction document submitted for a permit.

***** The drawing by James Fletcher, P.E. does not bear the address and occupation of the author and therefore does not comply with 111.1 and should not be accepted.

****** The definition of "determine" is a certain or establish exactly, typically as a result of research or calculation.

3. **Chesterfield County Responses to Relief Sought Issues, January 17, 2017**

Relief Sought:

As we understand the relief sought statement from the Thorpes they contend that USBC section R802.10.4 requires any alteration of the truss to be designed by an engineer; additionally, they question if the engineer stamped design from James Fletcher, P.E. (DPOR license Number 0402026629, expiration 1-31-2018) is acceptable.

Chesterfield BI Position:
The use of the term "altered" in USBC section R802.10.4 is intended to address alterations of a truss that adversely affect the structural capacity of the truss.* The padding was not installed to repair damage to the truss or increase the truss load capacity. The Truss was originally designed for limited storage per section R301.6** as detailed in the notes section of the truss design document. Nailing a 2x member to a truss that does not alter the load carrying capacity of the truss does not constitute a structural alteration that requires approval of an RDP. It could be further argued that R802.10.4 is not a valid provision of code. Per USBC 101.6, provisions of code are superseded by provisions of chapter 1 that address the same subject matter. Determination of when an RDP must design a structural member is prescribed by USBC sections 109, 111, 112.3 and COV title 54.1.***

We do not require an engineered design for truss padding installed for the purpose of raising the attic floor level; however, based on the concerns raised by the Thorpes, we did request and receive a design for this case. That is the design from James Fletcher, P.E. dated June 16, 2016.

* The text of the code does not say anything about whether the alteration affects the structural capacity of the truss. We believe it is written in this way because only a RDP can determine if the alteration will affect the structural capacity.

** This section of code refers to roof loads. The correct code to site is R301.5

*** Mr. Witt does not reference the following sections in Chapter 1 that would indicate that proof is required to determine if the method of construction complies with the intent of the code. It could be argued that Section 112.3.1 would allow that the instructions of the truss designer would supersede code regulations. The designer of our trusses said that a repair drawing was needed.

Section 112.3 Documentation and approval. In determining whether any material, equipment, device, assembly or method of construction complies with this code, the building official shall approve items listed by nationally recognized testing laboratories (NRTL), when such items are listed for the intended use and application, and in addition, may consider the recommendations of RDPs. Approval shall be issued when the building official finds that the proposed design is satisfactory and complies with the intent of the provisions of this code and that the material, equipment, device, assembly or method of construction offered is, for the purpose intended, at least the equivalent of that prescribed by the code. Such approval is subject to all applicable requirements of this code and the material, equipment, device, assembly or method of construction shall be installed in accordance with the conditions of the approval and their listings. In addition, the building official may revoke such

approval whenever it is discovered that such approval was issued in error or on the basis of incorrect information, or where there are repeated violations of the USBC. D.

Section 112.3.1 Conditions of listings. **Where conflicts between this code and conditions of the listing or the manufacturer's installation instructions occur, the provisions of this code shall apply. Exception: Where a code provision is less restrictive than the conditions of the listing of the equipment or appliance or the manufacturer's installation instructions, the conditions of the listing and the manufacturer's installation instructions shall apply**.

Thorpes Position :

In Chesterfield BI's interpretation they first reference section 112.3 and then reference 111.1. Section 111.1 does not apply to our situation. It states that the building department shall establish a procedure to ensure that construction documents under Section 109 (construction documents submitted for a permit) are prepared by an RDP in any case where cited exemptions to not apply. We have no dispute at this time over the original construction documents.

Chesterfield BI did not address Section 112.2 of the code which states:

112.2 Alternative methods or materials.
In accordance with Section 36-99 of the Code of Virginia, where practical, the provisions of this code are stated in terms of required level of performance so as to facilitate the prompt acceptance of new building materials and methods. When generally recognized standards of performance are not available, this section and other applicable requirements of this code ***provide for acceptance of materials and methods whose performance is substantially equal in safety to those specified on the basis of reliable test and evaluation data presented by the proponent. In addition, as a requirement of this code, the building official shall require that sufficient technical data be submitted to substantiate the proposed use of any material, equipment, device, assembly or method of construction****.*

What we are disputing is the method of construction (picture attached) that Finer Homes used in padding up our trusses. Section 112.2 clearly states that when a method of construction is not prescriptive then it must meet a performance standard. It is the **responsibility** of the Building Official to **require that sufficient technical data be submitted to substantiate the proposed method of construction.** The drawing by James Fletcher has no technical data on it to support the design.

Section 112.3 references Section 112.2, not 111.1. Section 112.3 gives the Building Official guidelines in which to determine if a proposed method of construction meets the performance standards of the code. If the item is listed by nationally recognized testing laboratories it can be approved, and the building official can consider the recommendations of RDP's. Approval is only given when the Building Official **finds** that the proposed design complies with the performance standard of the code.

Chesterfield BI's interpretation contends that the only responsibility that the Building Official has is to be in possession of a drawing stamped by an RDP even if the drawing does not meet code requirements and the RDP cannot be contacted. He totally skips the requirements in Section 112.2 which are relevant to our dispute.

In Mr. Witt's original statement on 9/30/16 he said "The Truss was originally designed for limited storage per section R301.6 as detailed in the notes section of the truss design document." Section R301.6 refers to roof live loads. The correct section is R301.5:

R301.5 Live load.

The minimum uniformly distributed live load shall be as provided in Table R301.5.

TABLE R301.5 MINIMUM UNIFORMLY DISTRIBUTED LIVE LOADS (in pounds per square foot)

USE	LIVE LOAD
Uninhabitable attics without storage[b]	10
Uninhabitable attics with limited storage[b, g]	**20**
Habitable attics and attics served with fixed stairs	**30**
Balconies (exterior) and decks[e]	40
Fire escapes	40
Guardrails and handrails[d]	200[h]
Guardrail in-fill components[f]	50[h]
Passenger vehicle garages[a]	50[a]
Rooms other than sleeping room	40
Sleeping rooms	30
Stairs	40[c]

For SI: 1 pound per square foot = 0.0479 kPa, 1 square inch = 645 mm2,1 pound = 4.45 N.

a. Elevated garage floors shall be capable of supporting a 2,000-pound load applied over a 20-square-inch area.

b. Uninhabitable attics without storage are those where the maximum clear height between joists and rafters is less than 42 inches, or where there are not two or more adjacent trusses with web configurations capable of accommodating an assumed rectangle 42 inches high by 24 inches in width, or greater, within the plane of the trusses. This live load need not be assumed to act concurrently with any other live load requirements.

c. Individual stair treads shall be designed for the uniformly distributed live load or a 300-pound concentrated load acting over an area of 4 square inches, whichever produces the greater stresses.

d. A single concentrated load applied in any direction at any point along the top.

e. See Section R502.2.2 for decks attached to exterior walls.

f. Guard in-fill components (all those except the handrail), balusters and panel fillers shall be designed to withstand a horizontally applied normal load of 50 pounds on an area equal to 1 square foot. This load need not be assumed to act concurrently with any other live load requirement.

g. Uninhabitable attics with limited storage are those where the maximum clear height between joists and rafters is 42 inches or greater, <u>or where there are two or more adjacent trusses with web configurations capable of accommodating an assumed rectangle 42 inches in height by 24 inches in width, or greater, within the plane of the trusses.</u>

The live load need only be applied to those portions of the joists or truss bottom chords where all of the following conditions are met:

1. The attic area is accessible from an opening not less than 20 inches in width by 30 inches in length that is located where the clear height in the attic is a minimum of 30 inches.

2. The slopes of the joists or truss bottom chords are no greater than 2 inches vertical to 12 units horizontal.

3. Required insulation depth is less than the joist or truss bottom chord member depth.

The remaining portions of the joists or truss bottom chords shall be designed for a uniformly

distributed concurrent live load of not less than 10 lb/ft2.

h. Glazing used in handrail assemblies and guards shall be designed with a safety factor of 4. The safety factor shall be applied to each of the concentrated loads applied to the top of the rail, and to the load on the in-fill components. These loads shall be determined independent of one another, and loads are assumed not to occur with any other live load.

The items in the above referenced code in bold apply to our attic. After reviewing this code and our pictures (attached) from the construction of our home and other Savannahs in Willow Creek we believe that our entire attic should not be floored because the six trusses that were padded up by Finer Homes have a different web configuration than the first nine trusses of the attic and therefore does not comply with item "g" in R301.5 Also, the original truss designs are titled SAVANNAH W/ROG & **PART ATTIC** (truss design and layout attached).

The background for this entire situation is relevant because it would explain why Finer Homes would pad up six trusses and floor the entire attic. In our original contract with Finer Homes we chose the $4,000.00 option of having an unfinished, habitable attic because we were told that if we did not make the attic habitable during the construction phase, it could not be done later. The wrong trusses were put on our house (trusses for a partial attic) and apparently Finer Homes did not realize this until the day before we emailed them about it. After Greg Holt was informed that we knew the trusses were wrong and the roofers were pulled off of the job, Finer Homes said that they could fix our trusses and give us a habitable attic with the trusses that were installed. We knew that would be very extensive if done correctly and were not comfortable with Mr. Holt's description of cutting webs in order to make it habitable. We were told that the large floored space that we saw in our attic could be used as attic storage....not limited storage, and released Finer Homes from their contractual obligation to provide us with a habitable attic. We believe that Finer Homes floored the entire attic to create the appearance of a large storage area in hopes that we would settle for that and not hold them to the contract. Why would they have floored it the way that they did if they intended to "give us what we paid for" and make the space habitable? When we did our walk-thru and asked for load limits on the attic we were promised that they would be provided. When we asked Finer Homes employee, Tony Stoots why out entire attic was floored he said it was because they had extra plywood. We were finally provided with truss drawings a year after we moved in in response to our repeated request for load limits on the attic. After reviewing the truss drawings and looking at our pictures from construction closely we realized that the trusses had been altered even though we expressly told them that we did not want the trusses altered when we discovered that the wrong trusses were put on out house. That is when we began to question the method of construction.

Finer Homes had the salesman from Structural Technologies come to our house to assure us that the trusses were fine for attic storage. He said that builders padded up trusses all the time and some even bought the trusses with the 2x6 bottom chord and then padded them up because it was cheaper. We showed Mr. Simmons our attic and he said that it was fine to have the load that we had in it (picture attached). We were skeptical of the information from Mr. Simmon's so I spoke to Frank Lassiter the next day on the phone and he asked me to e-mail him a picture of the padded up condition. His reply to the picture I sent him was to have Structural Technologies (the truss component manufacturer) issue a repair drawing for the padded up trusses and the HVAC platform that was added by Finer Homes without obtaining a design from an engineer as code requires. Finer Homes provided us with a repair drawing from Mr. Lassiter for the HVAC platform but the "repair" drawing for the padded up trusses was stamped by James Fletcher. Mr. Fletcher's drawing was a PDF that he drew lines on (see attachment of three versions of drawing). Mr. Fletcher's drawing did not have his address on it as required by R111.1. Finer Homes told us that Mr. Fletcher worked for Fletcher and Associates in Yorktown. When I called the number for the business it was no longer in service. I have tried for

months to find contact information for Mr. Fletcher with no luck and Finer Homes could not even provide Chesterfield BI contact information for him. I have filed a complaint against Mr. Fletcher with DPOR for violating the Rules and Regulations for Engineers and they found sufficient evidence to conduct an investigation which is currently on going (see attached emails from investigator). Mr. Fletchers drawing is clearly an example of the illegal practice of "plan stamping" in which a P.E. stamps design work which was not prepared by the engineer or by a person working under the engineer's responsible charge (see attached MiTek handout on Plan Stamping). The PDF that Mr. Fletcher drew lines on depicting exactly what Finer Homes had done to our trusses was design work done by Frank Lassiter.

The repair drawings from Mr. Lassiter (see attached) are computer generated from the Mitek Sapphire software program which uses design parameters to computer generate designs and repairs. This is the same program that was used to generate the original truss drawings and to generate the two truss repair drawings that Finer Homes did get from Mr. Lassiter. We repeatedly told Finer Homes that we would not feel comfortable about the padded up condition of the trusses until we saw a stamped drawing from Frank Lassiter. They have refused to produce this drawing. They told Chesterfield BI that Mr. Lassiter approved of their method of construction but could not stamp the drawing because he worked for Mitek and the drawing did not comply with Mitek standards. Chesterfield BI asked Mr. Holt to get a letter from Mr. Lassiter stating that he approved of their method of construction and Mr. Holt was not able to get the letter. I had sent two e-mails (see attached) to Mr. Lassiter after getting his reply to my initial email but I never got a reply. As you can see, we even offered to pay for the repair drawing ourselves. I was finally able to contact Mr. Lassiter on December 28, 2016 when I was able to get him on the phone. I asked him if he could tell me why the padded up trusses needed to be repaired and he basically said he could not talk to me because his customer (Structural Technologies) would not approve of him giving me the information.

One of the biggest issues here is liability if the method of construction used to pad up our trusses fails and causes damage to our home. Chesterfield BI will not be liable because they have sovereign immunity. Mr. Holt will not be liable because he has a repair drawing from a P.E. that has been accepted by Chesterfield BI. The P.E. will be liable because he approved the method of construction but unfortunately no one can get in touch with the P.E.

We believe that Finer Homes did not have Frank Lassiter do the repair drawing for the padded up trusses because the repair would be very extensive if it could be done at all. There is not logical reason why they would not have the repair drawing done by Mr. Lassiter as the two other truss repair drawings that were required for our home were done by him. The only logical explanation is to apply the legal rule of Adverse Inference:

Adverse-Inference Rule Law and Legal Definition

Adverse inverence rule refers to a principle that if a party fails to produce a witness who is within its power to produce and who should have been produced, the judge may instruct the jury to infer that the witness's evidence is unfavorable to the party's case. **The adverse inference rule applies only when a party has relevant evidence within its control which it fails to produce**. The logic supporting the adverse inference rule is that a party fails to produce evidence in its control in order to conceal adverse facts.

Simply stated, the adverse inference rule provides that when a party has relevant

evidence within his control which he fails to produce, that failure gives rise to an inference that the evidence is unfavorable to him." [Langford v. Norris, 2010 U.S. App. LEXIS 14800. 39-40 (8th Cir. Ark. July 20, 2010)]

Adverse inference rule is also known as empty chair doctrine or adverse interest rule.

Summary

We would ask that the State would rule that the drawing by James Fletcher is not acceptable because it does not comply with Section 111.1. We also feel it is irresponsible for BI to accept a drawing that cannot be verified when Finer Homes has access to the engineer that designed the trusses. We also ask that the State consider all of the applicable codes that would address the method of construction used to pad up our trusses and make a decision based on relevant code if the trusses that are installed in our attic can all be floored and used as attic space. We feel that Chesterfield BI has put the burden on us to find what code was applicable to the many code violations that we have found in our house. We would appreciate it if the State Board would use its code expertise to help us resolve this issue.

The attachments are in the order in which they are referenced.

Leah Thorpe <leah_thorpe@ccpsnet.net

orpe Trusses

1 message

Leah Thorpe <leah_thorpe@ccpsnet.net>
To: flassiter@mii.com

Wed, Jun 1, 2016 at 11:52 AM

Mr. Lassiter:

Thank you for taking the time to talk to me. Attached is the paperwork given to us by the customer service rep. and pictures of the modifications to the trusses. My home email is leahbthorpe@gmail.com and my cell phone number is 804-218-8493. I can be reached at 804-378-2480 ext 227 until 3:00 p.m. on weekdays. Thank you again!

Leah Thorpe
Bookkeeper
Monacan High School
11501 Smoketree Drive
N. Chesterfield, VA 23236
804-378-2480 ext. 227

attachments

TRUSS MODIFICATION 4-23-15 1.jpg
1756K

THORPE TRUSSES.pdf
2371K

RE: Thorpe Trusses

1 message

Frank Lassiter <flassiter@mii.com> Thu, Jun 2, 2016 at 11:24 AM
To: Leah Thorpe <leah_thorpe@ccpsnet.net>

I am getting ready to head out of town for the week.

Go ahead and tell Structural Technologies you need a repair drawing for the padding and for the HVAC.

If you don't get any thing back from them let me know next week.

From: Leah Thorpe [mailto:leah_thorpe@ccpsnet.net]
Sent: Wednesday, June 01, 2016 11:52 AM
To: Frank Lassiter
Subject: Thorpe Trusses

Mr. Lassiter:

Thank you for taking the time to talk to me. Attached is the paperwork given to us by the customer service rep. and pictures of the modifications to the trusses. My home email is leahbthorpe@gmail.com and my cell phone number is 804-218-8493. I can be reached at 804-378-2480 ext 227 until 3:00 p.m. on weekdays. Thank you again!

Leah Thorpe

Bookkeeper

Monacan High School

11501 Smoketree Drive

N. Chesterfield, VA 23236

804-378-2480

ext. 227

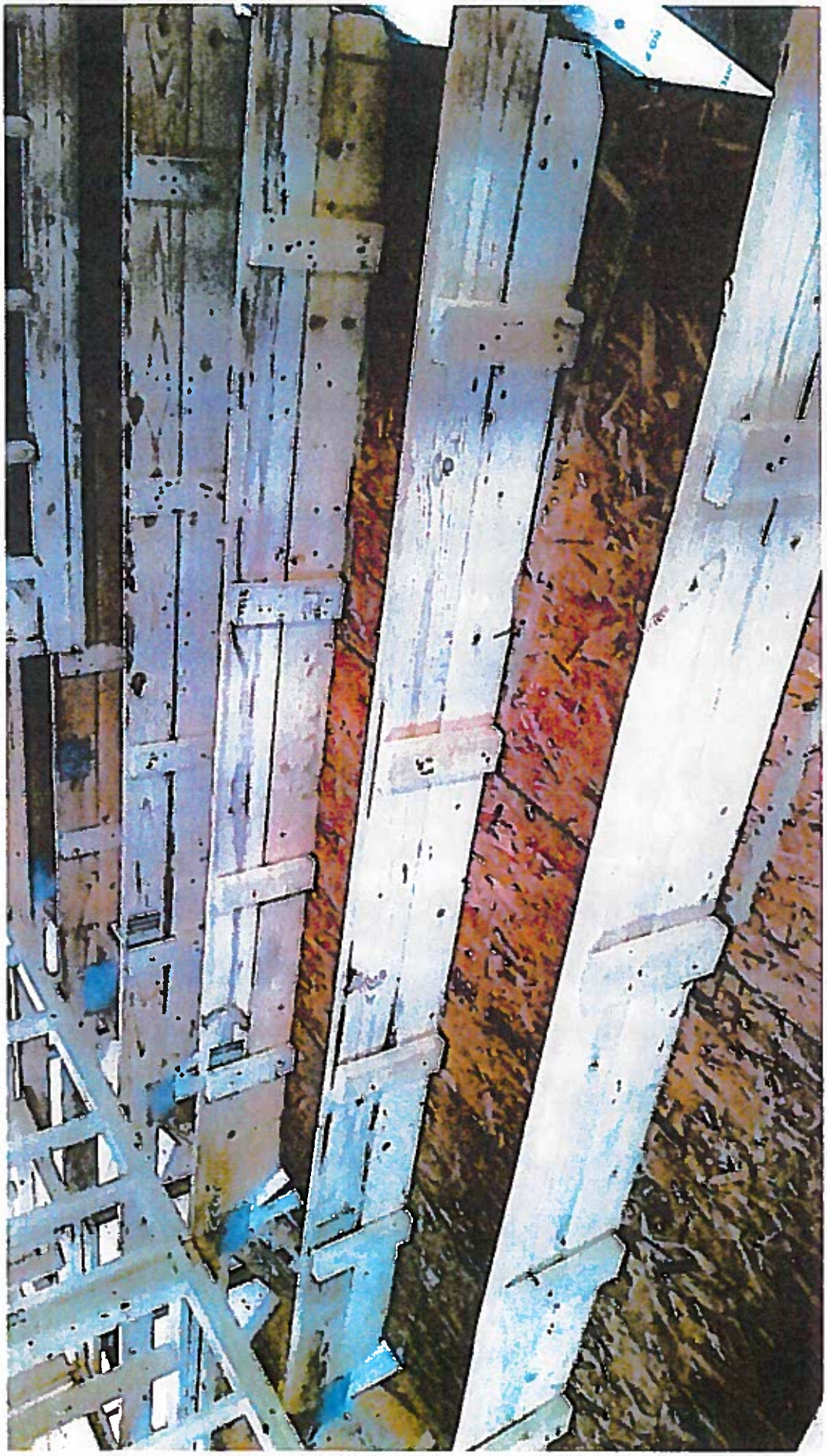

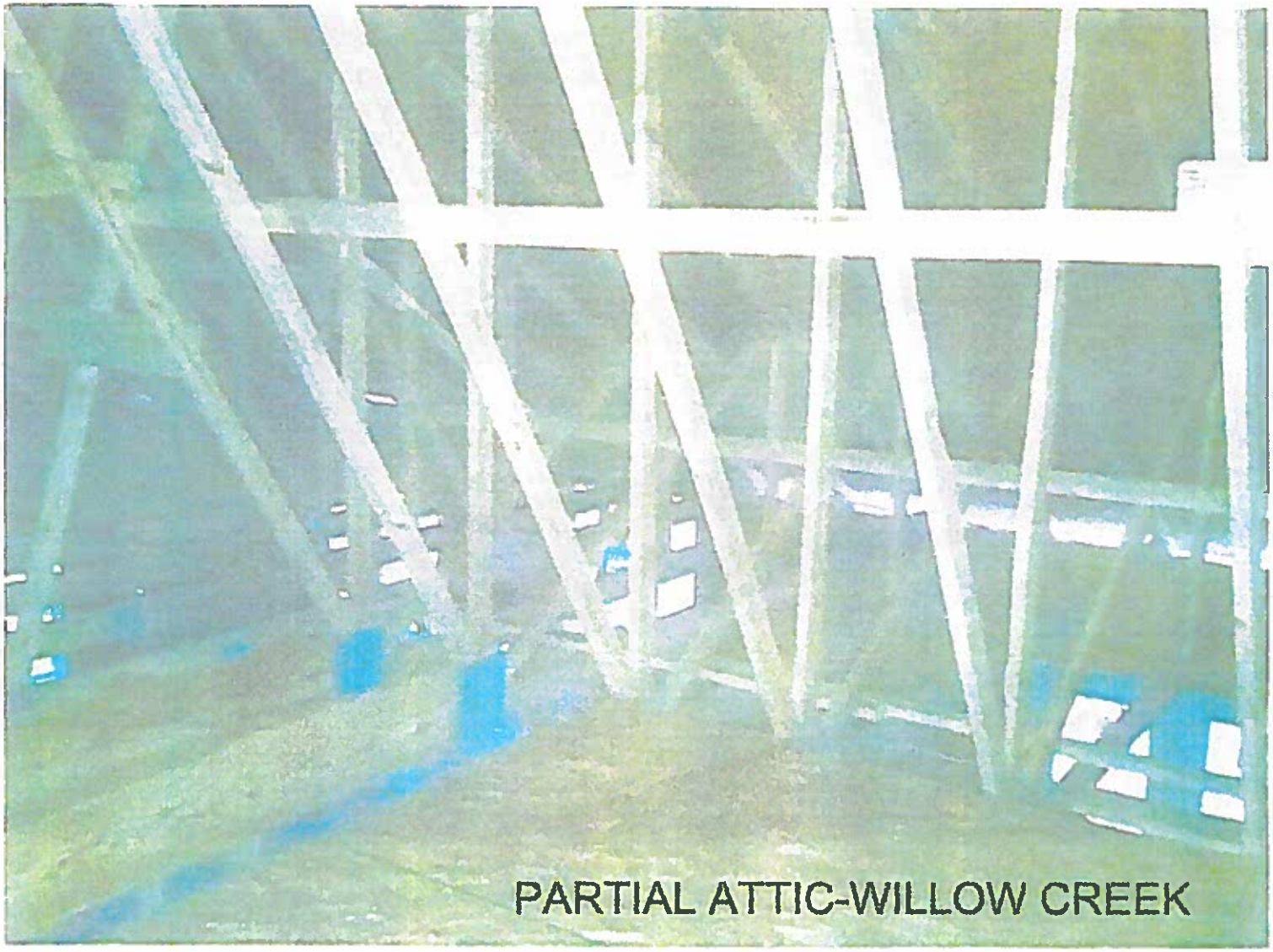
PARTIAL ATTIC-WILLOW CREEK

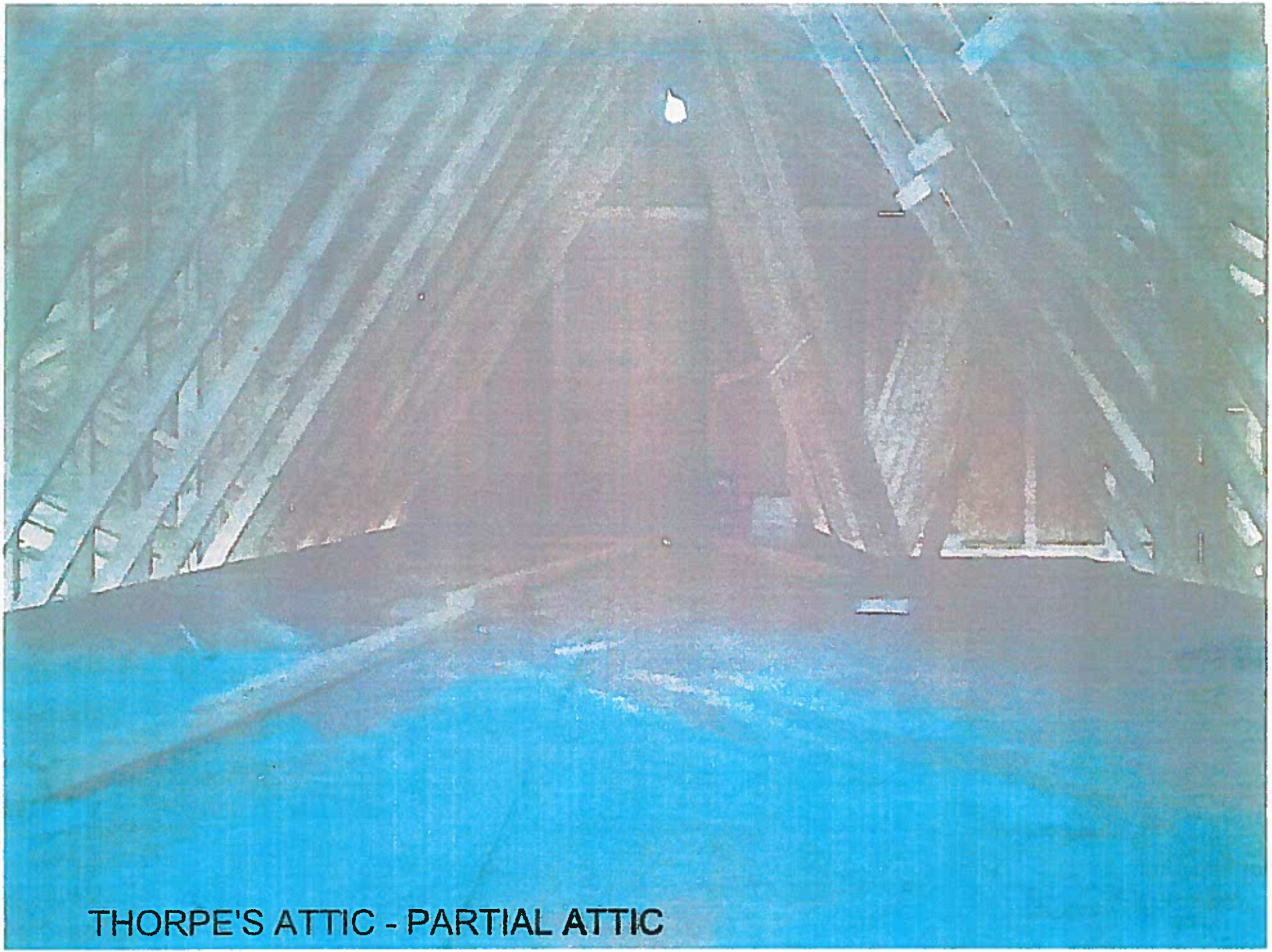

THORPE'S ATTIC - PARTIAL ATTIC

HABITABLE ATTIC - WILLOW CREEK

ENGINEERING BY
TRENCO
A MiTek Affiliate

Trenco
818 Soundside Rd
Edenton, NC 27932

Re: 25917
SAVANNAH W/ ROG & PART ATTIC

The truss drawing(s) referenced below have been prepared by Truss Engineering Co. under my direct supervision based on the parameters provided by Structural Technologies.

Pages or sheets covered by this seal: E8659946 thru E8659968

My license renewal date for the state of Virginia is December 31, 2016.

Lumber design values are in accordance with ANSI/TPI 1 section 6.3
These truss designs rely on lumber values established by others.

COMMONWEALTH OF VIRGINIA
FRANK R. LASSITER
Lic. No. 034728
PROFESSIONAL ENGINEER

March 20,2015
Lassiter, Frank

The seal on these drawings indicate acceptance of professional engineering responsibility solely for the truss components shown. The suitability and use of this component for any particular building is the responsibility of the building designer, per ANSI/TPI-1 Chapter 2.
Engineering services provided by Truss Engineering Company.

Job	Truss	Truss Type	Qty	Ply	SAVANNAH W/ ROG & PART ATTIC
25917	T-1	ROOF SPECIAL	9	1	E8659946 Job Reference (optional)

Structural Technologies, Doswell, VA 23047 — 7.610 s Jan 16 2015 MiTek Industries, Inc. Fri Mar 20 15:15:05 2015 Page 1

ID:hNjBGyXDZHd0w6OHrgvER7yQsfP-zkJAI_T35svZnGGkePTnHDmZKW9jZaDxzGxmJ1zZ0T4

-1-0-0	7-1-15	13-10-4	21-0-0	28-1-12	35-5-7	41-10-0	47-0-0	48-0-0
1-0-0	7-1-15	6-8-5	7-1-12	7-1-12	7-3-11	6-4-9	5-2-0	1-0-0

Scale = 1:89.1

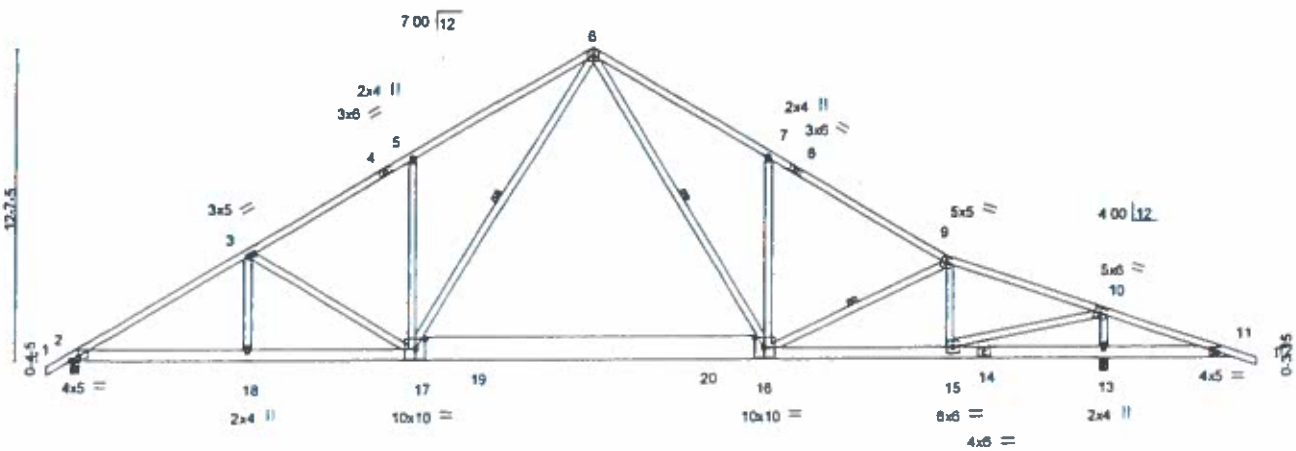

7-1-15	13-10-4	28-1-12	35-5-7	41-10-0	42-0-0	47-0-0
7-1-15	6-8-5	14-3-8	7-3-11	6-4-9	0-2-0	5-0-0

Plate Offsets (X,Y)— [2:0-3-4,0-1-3], [16:0-4-12,0-5-0], [17:0-4-12,0-5-0]

LOADING (psf)		SPACING- 2-0-0		CSI.		DEFL.	in	(loc)	l/defl	L/d	PLATES	GRIP
TCLL	20.0	Plate Grip DOL	1.15	TC	0.92	Vert(LL)	-0.27	16-17	>999	240	MT20	244/190
TCDL	10.0	Lumber DOL	1.15	BC	0.75	Vert(TL)	-0.54	16-17	>934	180		
BCLL	0.0 *	Rep Stress Incr	YES	WB	0.74	Horz(TL)	0.09	13	n/a	n/a		
BCDL	10.0	Code IRC2009/TPI2007		(Matrix)							Weight: 336 lb	FT = 5%

LUMBER-
TOP CHORD 2x4 SP No.1 *Except* 9-12,1-4: 2x4 SP No.2
BOT CHORD 2x6 SP No.2 *Except* 16-17: 2x12 SP No.2
WEBS 2x4 SP No.3 *Except* 10-15: 2x4 SP No.2

BRACING-
TOP CHORD Structural wood sheathing directly applied
BOT CHORD Rigid ceiling directly applied or 6-0-0 oc bracing
WEBS 1 Row at midpt 6-17, 6-16, 9-16

MiTek recommends that Stabilizers and required cross bracing be installed during truss erection, in accordance with Stabilizer Installation guide.

REACTIONS. (lb/size) 2=1887/0-4-0 (min. 0-2-4), 13=2356/0-4-0 (min. 0-2-12)
Max Horz 2=-300(LC 4)
Max Uplift 2=-238(LC 6), 13=-401(LC 7)

FORCES. (lb) - Maximum Compression/Maximum Tension
TOP CHORD 1-2=0/33, 2-3=-3181/386, 3-5=-2727/370, 5-6=-2725/505, 6-7=-2681/480, 7-9=-2677/336, 9-10=-2540/235, 10-11=-423/648, 11-12=0/22
BOT CHORD 2-18=-325/2648, 17-18=-326/2653, 16-17=-44/1599, 15-16=-151/2384, 13-15=-563/439, 11-13=-563/439
WEBS 3-18=0/341, 3-17=-470/160, 5-17=-436/214, 6-17=-268/1323, 6-16=-229/1237, 7-16=-487/238, 9-16=-246/76, 9-15=-814/203, 10-15=-533/3003, 10-13=-2129/475

NOTES-
Unbalanced roof live loads have been considered for this design.
Wind: ASCE 7-05; 90mph; TCDL=6.0psf; BCDL=3.0psf; h=25ft; Cat. II; Exp B; enclosed; MWFRS (low-rise) gable end zone and C-C Exterior(2) zone; cantilever left and right exposed ; end vertical left and right exposed;C-C for members and forces & MWFRS for reactions shown; Lumber DOL=1.15 plate grip DOL=1.15
This truss has been designed for a 20.0 psf bottom chord live load nonconcurrent with any other live loads.
* This truss has been designed for a live load of 20.0psf on the bottom chord in all areas where a rectangle 3-6-0 tall by 2-0-0 wide will fit between the bottom chord and any other members, with BCDL = 10.0psf.
Provide mechanical connection (by others) of truss to bearing plate capable of withstanding 238 lb uplift at joint 2 and 401 lb uplift at joint 13.
"Semi-rigid pitchbreaks with fixed heels" Member end fixity model was used in the analysis and design of this truss.

COMMONWEALTH OF VIRGINIA
FRANK R. LASSITER
Lic. No. 034728
PROFESSIONAL ENGINEER

March 20,2015

WARNING - Verify design parameters and READ NOTES ON THIS AND INCLUDED MITEK REFERENCE PAGE MII-7473 rev. 1/29/2014 BEFORE USE.
Design valid for use only with MiTek connectors. This design is based only upon parameters shown, and is for an individual building component. Applicability of design parameters and proper incorporation of component is responsibility of building designer - not truss designer. Bracing shown is for lateral support of individual web members only. Additional temporary bracing to insure stability during construction is the responsibility of the erector. Additional permanent bracing of the overall structure is the responsibility of the building designer. For general guidance regarding fabrication, quality control, storage, delivery, erection and bracing, consult ANSI/TPI1 Quality Criteria, DSB-89 and BCSI Building Component Safety Information, available from Truss Plate Institute, 281 N. Lee Street, Suite 312, Alexandria, VA 22314.
If Southern Pine (SP) lumber is specified, the design values are those effective 06/01/2013 by ALSC.

ENGINEERING BY TRENCO
A MiTek Affiliate
818 Soundside Road
Edenton, NC 27932

Job	Truss	Truss Type	Qty	Ply	SAVANNAH W ROG & PART ATTIC
25917	T-1GT	ROOF TRUSS	1	2	E8659947

Structural Technologies, Doswell, VA 23047

Job Reference (optional)

7.610 s Jan 16 2015 MiTek Industries, Inc. Fri Mar 20 15:15:06 2015 Page 1

ID:hNjBGyXDZHd0w6QHrgvER7yQsfP-RwtZ4JUhsA1OOQrwC7_0qOlhwS5I_f5CwgKsUzZ0T3

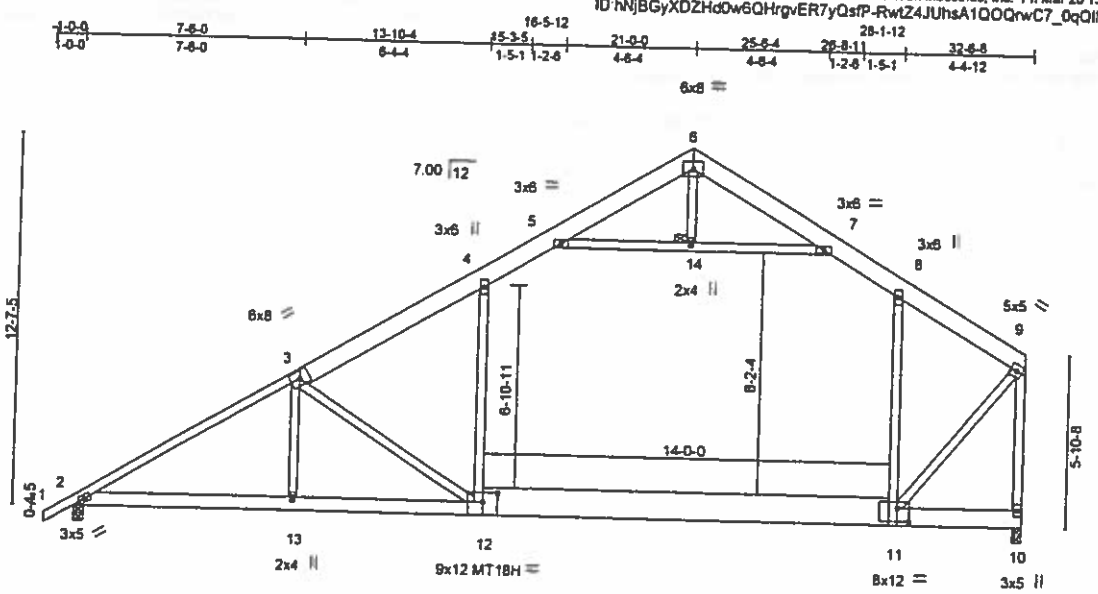

Plate Offsets (X,Y)— [11:0-4-12,0-5-8], [12:0-6-0,0-3-12]

LOADING (psf)		SPACING-	2-0-0	CSI.		DEFL.	in (loc)	l/defl	L/d	PLATES	GRIP
TCLL	20.0	Plate Grip DOL	1.15	TC	0.87	Vert(LL)	-0.76 12-13	>511	240	MT20	244/190
TCDL	10.0	Lumber DOL	1.15	BC	0.87	Vert(TL)	-1.37 12-13	>282	180	MT18H	244/190
BCLL	0.0 *	Rep Stress Incr	NO	WB	0.92	Horz(TL)	0.05 10	n/a	n/a		
BCDL	10.0	Code IRC2009/TPI2007		(Matrix)		Attic	-0.45 11-12	373	360	Weight: 583 lb	FT = 5%

LUMBER-

TOP CHORD 2x8 SP No.1 *Except*
1-3: 2x4 SP No.2

BOT CHORD 2x6 SP DSS *Except*
11-12: 2x12 SP No.2, 10-11: 2x8 SP DSS

WEBS 2x4 SP No.3 *Except*
4-12,8-11,5-7,9-10: 2x4 SP No.2

BRACING-

TOP CHORD Structural wood sheathing directly applied or 5-0-15 oc purlins, except end verticals.

BOT CHORD Rigid ceiling directly applied or 10-0-0 oc bracing. Except:
6-0-0 oc bracing: 10-11.

JOINTS 1 Brace at Jt(s): 14

REACTIONS. (lb/size) 2=2581/0-4-0 (min. 0-1-8), 10=3528/0-3-8 (min. 0-1-13)
Max Horz 2=354(LC 5)
Max Uplift 2=-163(LC 6), 10=-70(LC 6)

FORCES. (lb) - Maximum Compression/Maximum Tension

TOP CHORD 1-2=0/33, 2-3=-4846/234, 3-4=-3525/176, 4-5=-2916/240, 5-6=-2123/239, 6-7=-2540/242, 7-8=-3333/255, 8-9=-2871/161, 9-10=-4472/142

BOT CHORD 2-13=-253/4125, 12-13=-251/4071, 11-12=-35/2742, 10-11=-37/67

WEBS 3-13=-27/813, 3-12=-1657/261, 4-12=0/864, 8-11=-1232/147, 5-14=-828/87, 7-14=-828/87, 6-14=0/99, 9-11=-125/4424

NOTES-

1) 2-ply truss to be connected together with 12d (0.131"x3.25") nails as follows:
Top chords connected as follows: 2x4 - 1 row at 0-9-0 oc clinched, 2x8 - 2 rows staggered at 0-9-0 oc clinched.
Bottom chords connected as follows: 2x6 - 2 rows staggered at 0-9-0 oc clinched, 2x12 - 2 rows staggered at 0-9-0 oc clinched, 2x8 - 2 rows staggered at 0-9-0 oc clinched.
Webs connected as follows: 2x4 - 1 row at 0-9-0 oc clinched, Except member 6-14 2x4 - 1 row at 0-5-0 oc clinched.
2) All loads are considered equally applied to all plies, except if noted as front (F) or back (B) face in the LOAD CASE(S) section. Ply to ply connections have been provided to distribute only loads noted as (F) or (B), unless otherwise indicated.
3) Unbalanced roof live loads have been considered for this design.
4) Wind: ASCE 7-05; 90mph; TCDL=6.0psf; BCDL=3.0psf; h=25ft; Cat. II; Exp B; enclosed; MWFRS (low-rise) gable end zone and C-C Exterior(2) zone; cantilever left and right exposed ; end vertical left and right exposed;C-C for members and forces & MWFRS for reactions shown; Lumber DOL=1.15 plate grip DOL=1.15
5) All plates are MT20 plates unless otherwise indicated.
6) This truss has been designed for a 20.0 psf bottom chord live load nonconcurrent with any other live loads.
7) * This truss has been designed for a live load of 20.0psf on the bottom chord in all areas where a rectangle 3-6-0 tall by 2-0-0 wide will fit between the bottom chord and any other members.
8) Ceiling dead load (5.0 psf) on member(s). 4-5, 7-8, 5-14, 7-14; Wall dead load (6.0psf) on member(s).4-12, 8-11
9) Bottom chord live load (40.0 psf) and additional bottom chord dead load (0.0 psf) applied only to room. 11-12
10) Provide mechanical connection (by others) of truss to bearing plate capable of withstanding 163 lb uplift at joint 2 and 70 lb uplift at joint 10.
11) "Semi-rigid pitchbreaks with fixed heels" Member end fixity model was used in the analysis and design of this truss.
12) Hanger(s) or other connection device(s) shall be provided sufficient to support concentrated load(s) 2000 lb down and 161 lb up at 1-0-0 on top chord. The design/selection of such connection device(s) is the responsibility of others.
13) Graphic room checked for L/360 deflection.

Continued on page 2

COMMONWEALTH OF VIRGINIA
FRANK R. LASSITER
Lic. No. 034728
PROFESSIONAL ENGINEER

March 20,2015

WARNING - Verify design parameters and READ NOTES ON THIS AND INCLUDED MITEK REFERENCE PAGE MII-7473 rev. 1/29/2014 BEFORE USE.
Design valid for use only with MiTek connectors. This design is based only upon parameters shown, and is for an individual building component. Applicability of design parameters and proper incorporation of component is responsibility of building designer - not truss designer. Bracing shown is for lateral support of individual web members only. Additional temporary bracing to insure stability during construction is the responsibility of the erector. Additional permanent bracing of the overall structure is the responsibility of the building designer. For general guidance regarding fabrication, quality control, storage, delivery, erection and bracing, consult ANSI/TPI1 Quality Criteria, DSB-89 and BCSI Building Component Safety Information, available from Truss Plate Institute, 281 N. Lee Street, Suite 312, Alexandria, VA 22314.
If Southern Pine (SP) lumber is specified, the design values are those effective 06/01/2013 by ALSC

ENGINEERING BY TRENCO
A MiTek Affiliate
818 Soundside Road
Edenton, NC 27932

LOAD CASE(S) Standard

1) Dead + Roof Live (balanced) + Attic Floor: Lumber Increase=1.15, Plate Increase=1.15

Uniform Loads (plf)

Vert: 1-4=-60, 4-5=-70, 5-6=-60, 6-7=-60, 7-8=-70, 8-9=-60, 2-12=-20, 11-12=-100, 10-11=-20, 5-7=-10

Drag 4-12=-12, 8-11=-12

Concentrated Loads (lb)

Vert: 6=-2000(F)

WARNING - Verify design parameters and READ NOTES ON THIS AND INCLUDED MITEK REFERENCE PAGE MII-7473 rev. 1/29/2014 BEFORE USE.
Design valid for use only with MiTek connectors. This design is based only upon parameters shown, and is for an individual building component. Applicability of design parameters and proper incorporation of component is responsibility of building designer - not truss designer. Bracing shown is for lateral support of individual web members only. Additional temporary bracing to insure stability during construction is the responsibility of the erector. Additional permanent bracing of the overall structure is the responsibility of the building designer. For general guidance regarding fabrication, quality control, storage, delivery, erection and bracing, consult ANSI/TPI1 Quality Criteria, DSB-89 and BCSI Building Component Safety Information, available from Truss Plate Institute, 281 N. Lee Street, Suite 312, Alexandria, VA 22314.
If Southern Pine (SP) lumber is specified, the design values are those effective 06/01/2013 by AL SC.

ENGINEERING BY TRENCO A MiTek Affiliate
818 Soundside Road

Job	Truss	Truss Type	Qty	Ply	SAVANNAH W/ ROG & PART ATTIC
25917	T-1M	Monopitch	5	1	E8659948

Structural Technologies, Doswell, VA 23047

Job Reference (optional)

7.610 s Jan 16 2015 MiTek Industries, Inc. Fri Mar 20 15:15:07 2015 Page 1

ID:hNjBGyXDZHd0w6QHrgvER7yQsfP-v6RxlfVJdT9H0aP7mqVFMeryvKpJ1bnEQaQtOwzZ0T2

1-0-0 | 5-11-14 | 11-6-3 | 17-4-0

1-0-0 | 5-11-14 | 5-6-5 | 5-9-13

Scale = 1:57.6

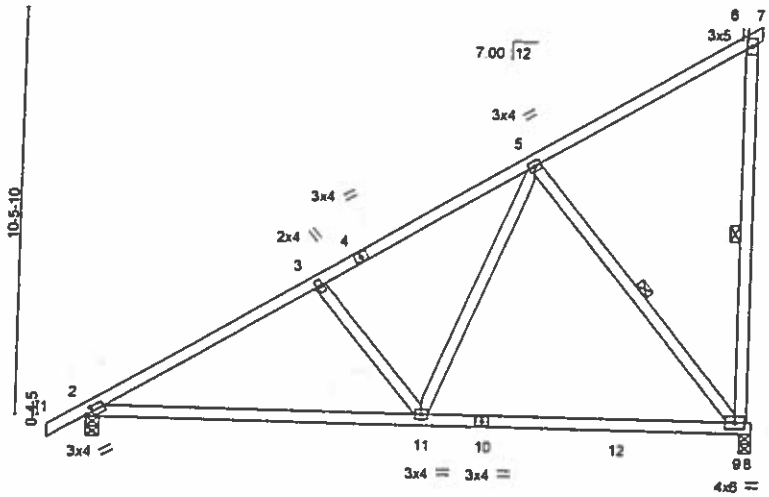

6-9-1 | 17-4-0

6-9-1 | 8-6-15

Plate Offsets (X,Y)— [2:0-2-4,0-1-8]

LOADING (psf)		SPACING-	2-0-0	CSI.		DEFL.	in	(loc)	l/defl	L/d	PLATES	GRIP
TCLL	20.0	Plate Grip DOL	1.15	TC	0.72	Vert(LL)	-0.21	9-11	>954	240	MT20	244/190
TCDL	10.0	Lumber DOL	1.15	BC	0.80	Vert(TL)	-0.37	9-11	>547	180		
BCLL	0.0 *	Rep Stress Incr	YES	WB	0.28	Horz(TL)	0.02	9	n/a	n/a		
BCDL	10.0	Code IRC2009/TPI2007		(Matrix)							Weight: 101 lb	FT = 5%

LUMBER-
TOP CHORD 2x4 SP No.2
BOT CHORD 2x4 SP No.2 *Except*
2-10: 2x4 SP No.1
WEBS 2x4 SP No.3 *Except*
6-9: 2x4 SP No.2

BRACING-
TOP CHORD Structural wood sheathing directly applied or 5-1-10 oc purlins, except end verticals.
BOT CHORD Rigid ceiling directly applied or 10-0-0 oc bracing.
WEBS 1 Row at midpt 6-9, 5-9

MiTek recommends that Stabilizers and required cross bracing be installed during truss erection, in accordance with Stabilizer Installation guide.

REACTIONS. (lb/size) 9=782/0-3-8 (min. 0-1-8), 2=789/0-4-0 (min. 0-1-8)
Max Horz 2=310(LC 5)
Max Uplift 9=-157(LC 6), 2=-99(LC 6)

FORCES. (lb) - Maximum Compression/Maximum Tension
TOP CHORD 1-2=0/29, 2-3=-1069/155, 3-5=-846/168, 5-6=-117/116, 6-7=-3/0, 6-9=-142/52
BOT CHORD 2-11=-166/845, 9-11=-101/439, 8-9=0/0
WEBS 3-11=-294/148, 5-11=-78/743, 5-9=-670/187

NOTES-
1) Wind: ASCE 7-05; 90mph; TCDL=6.0psf; BCDL=3.0psf; h=25ft; Cat. II; Exp B; enclosed; MWFRS (low-rise) gable end zone and C-C Exterior(2) zone; cantilever left and right exposed ; end vertical left and right exposed;C-C for members and forces & MWFRS for reactions shown; Lumber DOL=1.15 plate grip DOL=1.15
2) This truss has been designed for a 20.0 psf bottom chord live load nonconcurrent with any other live loads.
3) * This truss has been designed for a live load of 20.0psf on the bottom chord in all areas where a rectangle 3-6-0 tall by 2-0-0 wide will fit between the bottom chord and any other members, with BCDL = 10.0psf.
4) Provide mechanical connection (by others) of truss to bearing plate capable of withstanding 157 lb uplift at joint 9 and 99 lb uplift at joint 2.
5) "Semi-rigid pitchbreaks with fixed heels" Member end fixity model was used in the analysis and design of this truss.

COMMONWEALTH OF VIRGINIA
FRANK R. LASSITER
Lic. No. 034728
PROFESSIONAL ENGINEER

March 20,2015

WARNING - Verify design parameters and READ NOTES ON THIS AND INCLUDED MITEK REFERENCE PAGE MII-7473 rev. 1/29/2014 BEFORE USE.
Design valid for use only with MiTek connectors. This design is based only upon parameters shown, and is for an individual building component. Applicability of design parameters and proper incorporation of component is responsibility of building designer - not truss designer. Bracing shown is for lateral support of individual web members only. Additional temporary bracing to insure stability during construction is the responsibility of the erector. Additional permanent bracing of the overall structure is the responsibility of the building designer. For general guidance regarding fabrication, quality control, storage, delivery, erection and bracing, consult ANSI/TPI1 Quality Criteria, DSB-89 and BCSI Building Component Safety Information, available from Truss Plate Institute, 281 N. Lee Street, Suite 312, Alexandria, VA 22314.
If Southern Pine (SP) lumber is specified, the design values are those effective 06/01/2013 by ALSC.

ENGINEERING BY TRENCO A MiTek Affiliate
818 Soundside Road

Job	Truss	Truss Type	Qty	Ply	SAVANNAH W ROG & PART ATTIC
25917	T-1VA	ROOF SPECIAL	1	1	E8659949
					Job Reference (optional)

Structural Technologies, Doswell, VA 23047

7.610 s Jan 16 2015 MiTek Industries, Inc. Fri Mar 20 15:15:07 2015 Page 1

ID:hNjBGyXDZHd0w6QHrgvER7yQsfP-v6RxIfVJdT9H0aP7mqVFMenxzKt41W?EQaQtOwzZ0T2

-1-0-0	8-7-12	14-5-10	21-0-0	28-4-12	35-5-7	41-10-0	47-0-0	48-0-0
1-0-0	8-7-12	5-9-14	6-6-6	7-4-12	7-0-11	6-4-9	5-2-0	1-0-0

Scale = 1:89.1

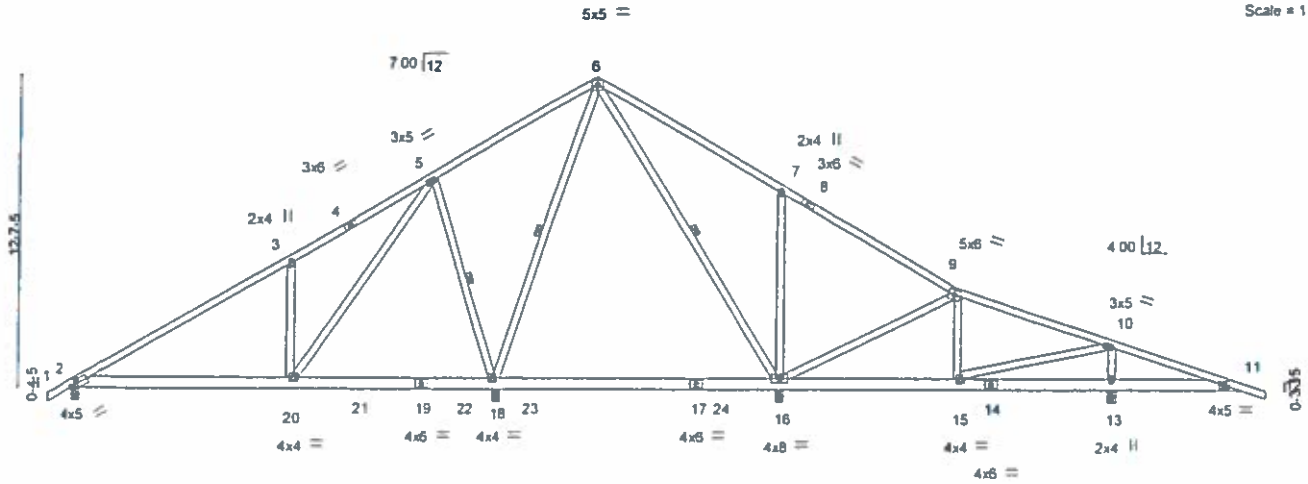

8-7-12	17-1-4	28-4-12	35-5-7	41-10-0	42-0-0	47-0-0
8-7-12	8-5-8	11-3-8	7-0-11	6-4-9	0-2-0	5-0-0

Plate Offsets (X,Y)-- [2:0-3-3,0-1-14]

LOADING (psf)		SPACING-	2-0-0	CSI.		DEFL.	in	(loc)	l/defl	L/d	PLATES	GRIP
TCLL	20.0	Plate Grip DOL	1.15	TC	0.78	Vert(LL)	-0.16	16-18	>833	240	MT20	244/190
TCDL	10.0	Lumber DOL	1.15	BC	0.56	Vert(TL)	-0.28	16-18	>479	180		
BCLL	0.0 *	Rep Stress Incr	YES	WB	0.59	Horz(TL)	0.01	13	n/a	n/a		
BCDL	10.0	Code IRC2009/TPI2007		(Matrix)							Weight: 305 lb	FT = 5%

LUMBER-
TOP CHORD 2x4 SP No.2
BOT CHORD 2x6 SP No.2
WEBS 2x4 SP No.3

BRACING-
TOP CHORD Structural wood sheathing directly applied or 5-3-8 oc purlins
BOT CHORD Rigid ceiling directly applied or 6-0-0 oc bracing. Except:
10-0-0 oc bracing: 2-20
WEBS 1 Row at midpt 5-18, 6-18, 6-16

MiTek recommends that Stabilizers and required cross bracing be installed during truss erection, in accordance with Stabilizer Installation guide

REACTIONS. (lb/size) 2=597/0-3-8 (min. 0-1-8), 18=1665/0-3-8 (min. 0-1-15), 16=1161/0-3-8 (min. 0-1-8), 13=927/0-4-0 (min. 0-1-8)
Max Horz 2=-300(LC 4)
Max Uplift 2=-82(LC 6), 18=-211(LC 6), 16=-202(LC 7), 13=-353(LC 5)
Max Grav 2=607(LC 10), 18=1665(LC 1), 16=1164(LC 11), 13=955(LC 11)

FORCES. (lb) - Maximum Compression/Maximum Tension
TOP CHORD 1-2=0/33, 2-3=-625/72, 3-5=-585/202, 5-6=-13/415, 6-7=-5/361, 7-9=-84/384, 9-10=-140/92, 10-11=-433/699, 11-12=0/22
BOT CHORD 2-20=-35/425, 18-20=-132/206, 16-18=-168/257, 15-16=-70/234, 13-15=-612/448, 11-13=-612/448
WEBS 3-20=-437/211, 5-20=-223/843, 5-18=-699/259, 6-18=-519/31, 6-16=-214/19, 7-16=-499/243, 9-16=-301/62, 9-15=-136/174, 10-15=-218/654, 10-13=-764/315

NOTES-
Unbalanced roof live loads have been considered for this design.
Wind: ASCE 7-05; 90mph; TCDL=6.0psf; BCDL=3.0psf; h=25ft; Cat. II; Exp B; enclosed; MWFRS (low-rise) gable end zone and C-C Exterior(2) zone; cantilever left and right exposed ; end vertical left and right exposed;C-C for members and forces & MWFRS for reactions shown; Lumber DOL=1.15 plate grip DOL=1.15
This truss has been designed for a 20.0 psf bottom chord live load nonconcurrent with any other live loads.
* This truss has been designed for a live load of 20.0psf on the bottom chord in all areas where a rectangle 3-6-0 tall by 2-0-0 wide will fit between the bottom chord and any other members, with BCDL = 10.0psf.
Provide mechanical connection (by others) of truss to bearing plate capable of withstanding 82 lb uplift at joint 2, 211 lb uplift at joint 18, 202 lb uplift at joint 16 and 353 lb uplift at joint 13.
"Semi-rigid pitchbreaks with fixed heels" Member end fixity model was used in the analysis and design of this truss.

COMMONWEALTH OF VIRGINIA
FRANK R. LASSITER
Lic. No. 034728
PROFESSIONAL ENGINEER

March 20,2015

WARNING - Verify design parameters and READ NOTES ON THIS AND INCLUDED MITEK REFERENCE PAGE MII-1473 rev. 1/29/2014 BEFORE USE.
Design valid for use only with MiTek connectors. This design is based only upon parameters shown, and is for an individual building component. Applicability of design parameters and proper incorporation of component is responsibility of building designer - not truss designer. Bracing shown is for lateral support of individual web members only. Additional temporary bracing to insure stability during construction is the responsibility of the erector. Additional permanent bracing of the overall structure is the responsibility of the building designer. For general guidance regarding fabrication, quality control, storage, delivery, erection and bracing, consult ANSI/TPI1 Quality Criteria, DSB-89 and BCSI Building Component Safety Information, available from Truss Plate Institute, 281 N. Lee Street, Suite 312, Alexandria, VA 22314.
If Southern Pine (SP) lumber is specified, the design values are those effective 06/01/2013 by ALSC

ENGINEERING BY TRENCO
A MiTek Affiliate
818 Soundside Road
Edenton, NC 27932

Job	Truss	Truss Type	Qty	Ply	SAVANNAH W/ ROG & PART ATTIC
25917	T-1VG	GABLE	1	1	E8659950

Structural Technologies, Doswell, VA 23047

Job Reference (optional)

7.610 s Jan 16 2015 MiTek Industries, Inc. Fri Mar 20 15:15:09 2015 Page 1

ID:hNjBGyXDZHd0w6QHrgvER7yQs/P-sVYhjLWZ95P?FuZVtFXjS3wRC8g4VXaXuuv_SpzZ0T0

-1-0-0 / 1-0-0 — 21-0-0 / 21-0-0 — 42-0-0 / 21-0-0

Scale = 1:83.6

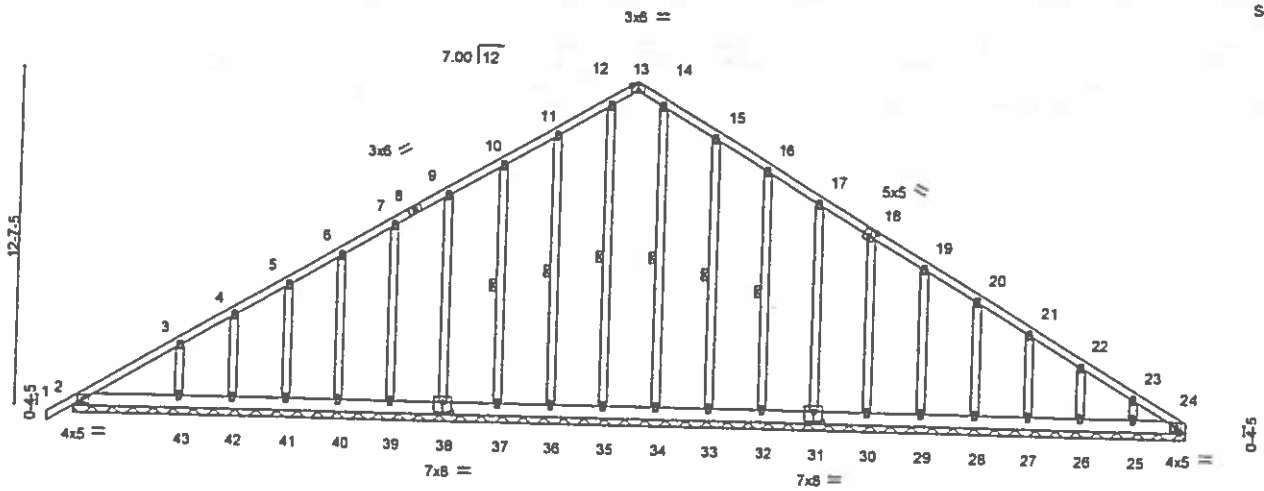

8-7-12 / 8-7-12 — 16-11-9 / 8-3-12 — 42-0-0 / 25-0-8

Plate Offsets (X,Y)— [13:0-3-0,Edge], [18:0-2-8,0-3-0], [31:0-4-0,0-4-8], [38:0-4-0,0-4-8]

LOADING (psf)		SPACING- 2-0-0		CSI.		DEFL.	in	(loc)	l/defl	L/d	PLATES	GRIP
TCLL	20.0	Plate Grip DOL	1.15	TC	0.16	Vert(LL)	-0.00	1	n/r	120	MT20	244/190
TCDL	10.0	Lumber DOL	1.15	BC	0.08	Vert(TL)	0.00	1	n/r	120		
BCLL	0.0 *	Rep Stress Incr	YES	WB	0.14	Horz(TL)	0.01	24	n/a	n/a		
BCDL	10.0	Code IRC2009/TPI2007		(Matrix)							Weight: 352 lb	FT = 5%

LUMBER-
TOP CHORD 2x4 SP No.2
BOT CHORD 2x6 SP No.2
OTHERS 2x4 SP No.2

BRACING-
TOP CHORD Structural wood sheathing directly applied or 6-0-0 oc purlins.
BOT CHORD Rigid ceiling directly applied or 10-0-0 oc bracing.
WEBS 1 Row at midpt 10-37, 11-36, 12-35, 14-34, 15-33, 16-32

MiTek recommends that Stabilizers and required cross bracing be installed during truss erection, in accordance with Stabilizer Installation guide.

REACTIONS. (lb/size) 24=73/42-0-0 (min. 0-4-1), 2=211/42-0-0 (min. 0-4-1), 43=311/42-0-0 (min. 0-4-1), 42=96/42-0-0 (min. 0-4-1), 41=176/42-0-0 (min. 0-4-1), 40=156/42-0-0 (min. 0-4-1), 39=161/42-0-0 (min. 0-4-1), 38=160/42-0-0 (min. 0-4-1), 37=160/42-0-0 (min. 0-4-1), 36=162/42-0-0 (min. 0-4-1), 35=148/42-0-0 (min. 0-4-1), 34=148/42-0-0 (min. 0-4-1), 33=162/42-0-0 (min. 0-4-1), 32=160/42-0-0 (min. 0-4-1), 31=159/42-0-0 (min. 0-4-1), 30=160/42-0-0 (min. 0-4-1), 29=161/42-0-0 (min. 0-4-1), 28=159/42-0-0 (min. 0-4-1), 27=162/42-0-0 (min. 0-4-1), 26=154/42-0-0 (min. 0-4-1), 25=182/42-0-0 (min. 0-4-1)
Max Horz 2=293(LC 5)
Max Uplift 24=-13(LC 5), 2=-28(LC 4), 43=-79(LC 6), 42=-33(LC 6), 41=-50(LC 6), 40=-46(LC 6), 39=-47(LC 6), 38=-47(LC 6), 37=-44(LC 6), 36=-66(LC 6), 33=-69(LC 7), 32=-44(LC 7), 31=-47(LC 7), 30=-47(LC 7), 29=-47(LC 7), 28=-47(LC 7), 27=-47(LC 7), 26=-45(LC 7), 25=-49(LC 7)
Max Grav 24=105(LC 7), 2=211(LC 1), 43=323(LC 2), 42=96(LC 1), 41=178(LC 2), 40=156(LC 10), 39=161(LC 2), 38=160(LC 10), 37=160(LC 2), 36=163(LC 10), 35=156(LC 2), 34=156(LC 2), 33=163(LC 11), 32=160(LC 1), 31=160(LC 2), 30=160(LC 1), 29=161(LC 11), 28=160(LC 2), 27=162(LC 11), 26=154(LC 2), 25=182(LC 1)

FORCES. (lb) - Maximum Compression/Maximum Tension
TOP CHORD 1-2=0/32, 2-3=-251/134, 3-4=-202/120, 4-5=-178/121, 5-6=-150/116, 6-7=-122/113, 7-9=-94/109, 9-10=-66/106, 10-11=-51/131, 11-12=-51/171, 12-13=-45/143, 13-14=-45/143, 14-15=-51/166, 15-16=-51/117, 16-17=-51/79, 17-18=-50/48, 18-19=-56/47, 19-20=-84/51, 20-21=-114/54, 21-22=-155/58, 22-23=-197/61, 23-24=-236/64
BOT CHORD 2-43=-52/218, 42-43=-52/218, 41-42=-52/218, 40-41=-52/218, 39-40=-52/218, 38-39=-52/218, 37-38=-52/218, 36-37=-52/218, 35-36=-52/218, 34-35=-52/218, 33-34=-52/218, 32-33=-52/218, 31-32=-52/218, 30-31=-52/218, 29-30=-52/218, 28-29=-52/218, 27-28=-52/218, 26-27=-52/218, 25-26=-52/218, 24-25=-52/218
WEBS 3-43=-203/93, 4-42=-87/45, 5-41=-127/62, 6-40=-118/58, 7-39=-120/59, 9-38=-120/59, 10-37=-120/56, 11-36=-123/78, 12-35=-108/10, 14-34=-108/0, 15-33=-123/81, 16-32=-120/56, 17-31=-119/59, 18-30=-120/59, 19-29=-121/59, 20-28=-120/59, 21-27=-120/59, 22-26=-119/59, 23-25=-124/54

NOTES-
1) Unbalanced roof live loads have been considered for this design.
2) Wind: ASCE 7-05; 90mph; TCDL=6.0psf; BCDL=3.0psf; h=25ft; Cat. II; Exp B; enclosed; MWFRS (low-rise) gable end zone and C-C Exterior(2) zone; cantilever left and right exposed ; end vertical left and right exposed;C-C for members and forces & MWFRS for reactions shown; Lumber DOL=1.15 plate grip DOL=1.15
3) Truss designed for wind loads in the plane of the truss only. For studs exposed to wind (normal to the face), see Standard Industry Gable End Details as applicable, or consult qualified building designer as per ANSI/TPI 1.
4) Gusset plates are 2x4 MT20 unless otherwise indicated.
5) Gable requires continuous bottom chord bearing.

Continued on page 2

COMMONWEALTH OF VIRGINIA
FRANK R. LASSITER
Lic. No. 034728
PROFESSIONAL ENGINEER

March 20,2015

WARNING - Verify design parameters and READ NOTES ON THIS AND INCLUDED MITEK REFERENCE PAGE MII-7473 rev. 1/29/2014 BEFORE USE.
Design valid for use only with MiTek connectors. This design is based only upon parameters shown, and is for an individual building component. Applicability of design parameters and proper incorporation of component is responsibility of building designer - not truss designer. Bracing shown is for lateral support of individual web members only. Additional temporary bracing to insure stability during construction is the responsibility of the erector. Additional permanent bracing of the overall structure is the responsibility of the building designer. For general guidance regarding fabrication, quality control, storage, delivery, erection and bracing, consult ANSI/TPI1 Quality Criteria, DSB-89 and BCSI Building Component Safety Information, available from Truss Plate Institute, 281 N. Lee Street, Suite 312, Alexandria, VA 22314.
If Southern Pine (SP) lumber is specified, the design values are those effective 06/01/2013 by ALSC

ENGINEERING BY TRENCO A MiTek Affiliate 818 Soundside Road

NOTES-

6) Gable studs spaced at 2-0-0 oc.

7) This truss has been designed for a 20.0 psf bottom chord live load nonconcurrent with any other live loads.

8) * This truss has been designed for a live load of 20.0psf on the bottom chord in all areas where a rectangle 3-6-0 tall by 2-0-0 wide will fit between the bottom chord and any other members.

9) Provide mechanical connection (by others) of truss to bearing plate capable of withstanding 13 lb uplift at joint 24, 28 lb uplift at joint 2, 79 lb uplift at joint 43, 33 lb uplift at joint 42, 50 lb uplift at joint 41, 46 lb uplift at joint 40, 47 lb uplift at joint 39, 47 lb uplift at joint 38, 44 lb uplift at joint 37, 66 lb uplift at joint 36, 69 lb uplift at joint 33, 44 lb uplift at joint 32, 47 lb uplift at joint 31, 47 lb uplift at joint 30, 47 lb uplift at joint 29, 47 lb uplift at joint 28, 47 lb uplift at joint 27, 45 lb uplift at joint 26 and 49 lb uplift at joint 25.

10) "Semi-rigid pitchbreaks with fixed heels" Member end fixity model was used in the analysis and design of this truss.

WARNING - Verify design parameters and READ NOTES ON THIS AND INCLUDED MITEK REFERENCE PAGE MII-7473 rev. 1/29/2014 BEFORE USE
esign valid for use only with MiTek connectors. This design is based only upon parameters shown, and is for an individual building component. pplicability of design parameters and proper incorporation of component is responsibility of building designer - not truss designer. Bracing shown for lateral support of individual web members only. Additional temporary bracing to insure stability during construction is the responsibility of the ector. Additional permanent bracing of the overall structure is the responsibility of the building designer. For general guidance regarding brication, quality control, storage, delivery, erection and bracing, consult ANSI/TPI1 Quality Criteria, DSB-89 and BCSI Building Component ety Information, available from Truss Plate Institute, 281 N. Lee Street, Suite 312, Alexandria, VA 22314.
Southern Pine (SP) lumber is specified, the design values are those effective 06/01/2013 by ALSC.

ENGINEERING BY TRENCO A MiTek Affiliate
818 Soundside Road

Job	Truss	Truss Type	Qty	Ply	SAVANNAH W ROG & PART ATTIC
25917	T-1VX	COMMON	6	1	E8659951

Structural Technologies, Doswell, VA 23047

Job Reference (optional)

7.610 s Jan 16 2015 MiTek Industries, Inc. Fri Mar 20 15:15:09 2015 Page 1

ID:hNj8GyXDZHd0w6QHrgvER7yQsfP-aVYhjLWZ95P?FuZVtFXjS3wIm8XXVRGXuuv_SpzZ0T0

-1-0-0	8-7-12	14-5-10	21-0-0	28-4-12	34-11-9	42-0-0
1-0-0	8-7-12	5-9-14	6-6-6	7-4-12	6-6-13	7-0-7

Scale = 1:78.4

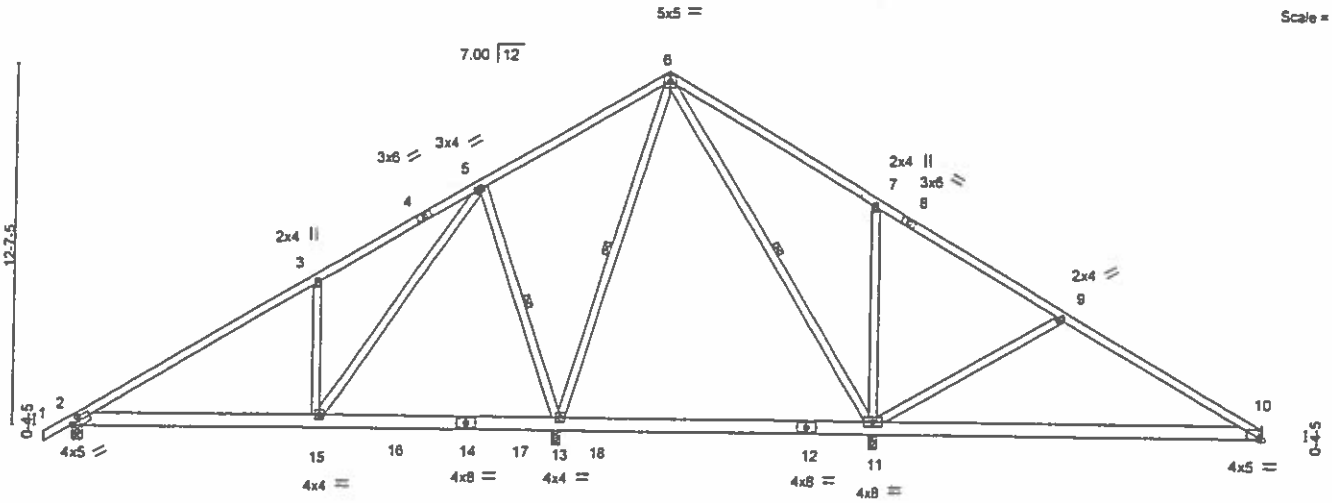

8-7-12	17-1-4	28-4-12	42-0-0
8-7-12	8-5-8	11-3-8	13-7-4

Plate Offsets (X,Y)-- [2:0-3-3,0-1-14], [10:0-1-4,0-0-3]

LOADING (psf)		SPACING-	2-0-0	CSI.		DEFL.	in	(loc)	l/defl	L/d	PLATES	GRIP
TCLL	20.0	Plate Grip DOL	1.15	TC	0.76	Vert(LL)	-0.36	10-11	>448	240	MT20	244/190
TCDL	10.0	Lumber DOL	1.15	BC	0.69	Vert(TL)	-0.67	10-11	>242	180		
BCLL	0.0 *	Rep Stress Incr	YES	WB	0.54	Horz(TL)	0.01	10	n/a	n/a		
BCDL	10.0	Code IRC2009/TPI2007		(Matrix)							Weight: 268 lb	FT = 5%

LUMBER-
TOP CHORD 2x4 SP No.2
BOT CHORD 2x6 SP No.2 *Except* 10-12: 2x6 SP No.1D
WEBS 2x4 SP No.3

BRACING-
TOP CHORD Structural wood sheathing directly applied or 5-2-7 oc purlins.
BOT CHORD Rigid ceiling directly applied or 6-0-0 oc bracing. Except: 10-0-0 oc bracing: 2-15.
WEBS 1 Row at midpt 5-13, 6-13, 6-11

MiTek recommends that Stabilizers and required cross bracing be installed during truss erection, in accordance with Stabilizer Installation guide.

REACTIONS. (lb/size) 2=615/0-4-0 (min. 0-1-8), 13=1657/0-3-8 (min. 0-1-15), 11=1248/0-3-8 (min. 0-1-8), 10=366/Mechanical
Max Horz 2=293(LC 5)
Max Uplift 2=-81(LC 6), 13=-215(LC 6), 11=-235(LC 7), 10=-21(LC 7)
Max Grav 2=620(LC 10), 13=1657(LC 1), 11=1250(LC 11), 10=397(LC 11)

FORCES. (lb) - Maximum Compression/Maximum Tension
TOP CHORD 1-2=0/33, 2-3=-653/68, 3-5=-613/197, 5-6=-42/402, 6-7=-1/324, 7-9=-73/327, 9-10=-343/58
BOT CHORD 2-15=-137/448, 13-15=-94/191, 11-13=-137/233, 10-11=-14/214
WEBS 3-15=-435/211, 5-15=-219/877, 5-13=-703/256, 6-13=-539/34, 6-11=-170/0, 7-11=-458/225, 9-11=-412/189

NOTES-
1) Unbalanced roof live loads have been considered for this design.
2) Wind: ASCE 7-05; 90mph; TCDL=6.0psf; BCDL=3.0psf; h=25ft; Cat. II; Exp B; enclosed; MWFRS (low-rise) gable end zone and C-C Exterior(2) zone; cantilever left and right exposed ; end vertical left and right exposed;C-C for members and forces & MWFRS for reactions shown; Lumber DOL=1.15 plate grip DOL=1.15
3) This truss has been designed for a 20.0 psf bottom chord live load nonconcurrent with any other live loads.
4) * This truss has been designed for a live load of 20.0psf on the bottom chord in all areas where a rectangle 3-6-0 tall by 2-0-0 wide will fit between the bottom chord and any other members, with BCDL = 10.0psf.
5) Refer to girder(s) for truss to truss connections.
6) Provide mechanical connection (by others) of truss to bearing plate capable of withstanding 81 lb uplift at joint 2, 215 lb uplift at joint 13, 235 lb uplift at joint 11 and 21 lb uplift at joint 10.
7) "Semi-rigid pitchbreaks with fixed heels" Member end fixity model was used in the analysis and design of this truss.

COMMONWEALTH OF VIRGINIA
FRANK R. LASSITER
Lic. No. 034728
PROFESSIONAL ENGINEER

March 20,2015

WARNING - Verify design parameters and READ NOTES ON THIS AND INCLUDED MITEK REFERENCE PAGE MII-7473 rev. 3/29/2014 BEFORE USE.
Design valid for use only with MiTek connectors. This design is based only upon parameters shown, and is for an individual building component. Applicability of design parameters and proper incorporation of component is responsibility of building designer - not truss designer. Bracing shown is for lateral support of individual web members only. Additional temporary bracing to insure stability during construction is the responsibility of the erector. Additional permanent bracing of the overall structure is the responsibility of the building designer. For general guidance regarding fabrication, quality control, storage, delivery, erection and bracing, consult ANSI/TPI1 Quality Criteria, DSB-89 and BCSI Building Component Safety Information, available from Truss Plate Institute, 281 N. Lee Street, Suite 312, Alexandria, VA 22314.
If Southern Pine (SP) lumber is specified, the design values are those effective 06/01/2013 by ALSC

ENGINEERING BY TRENCO A MiTek Affiliate
818 Soundside Road
Edenton, NC 27932

ob	Truss	Truss Type	Qty	Ply	SAVANNAH W/ ROG & PART ATTIC	E8659952
5917	T-1X	ATTIC	4	1	Job Reference (optional)	

Structural Technologies, Doswell, VA 23047

7.610 s Jan 16 2015 MiTek Industries, Inc. Fri Mar 20 15:15:10 2015 Page 1

ID:hNjBGyXDZHd0w6QHrgvER7yQsfP-Kh63whXBvOXst18iRy2y_GTU7XrpDqmh7XeX?FzZ0T?

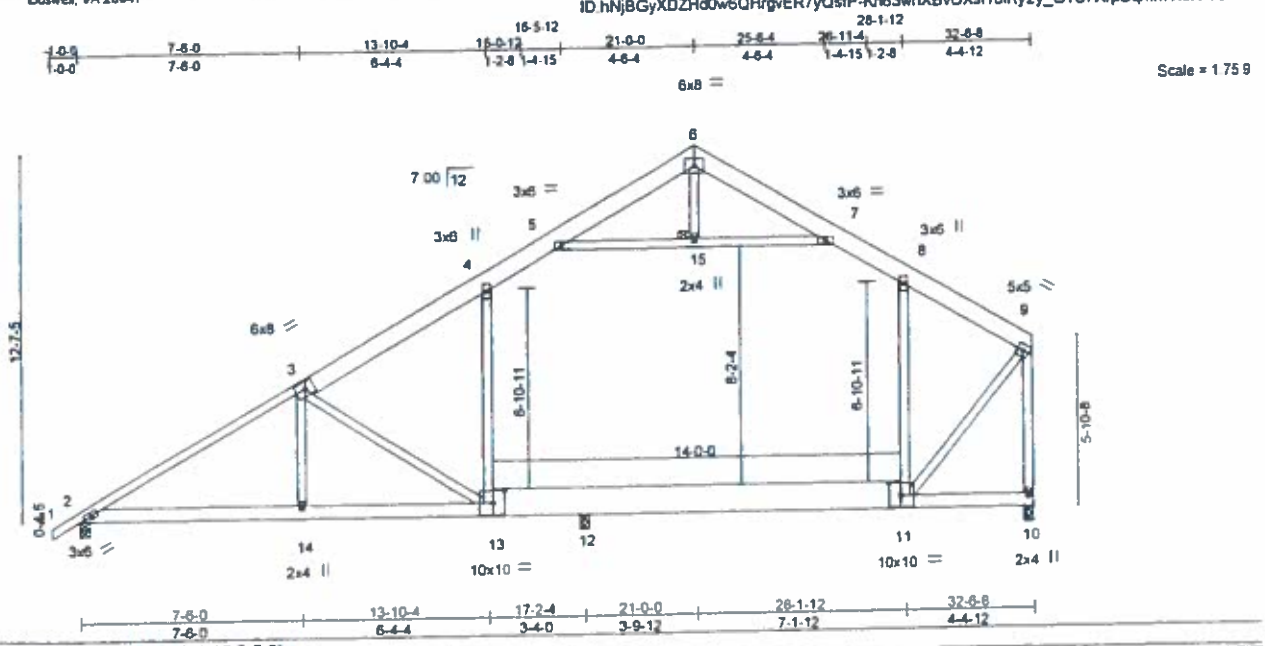

Plate Offsets (X,Y)-- [11:0-4-12,0-5-0], [13:0-4-12,0-5-0]

LOADING (psf)		SPACING-	2-0-0	CSI.		DEFL.	in (loc)	l/defl	L/d	PLATES	GRIP
CLL	20.0	Plate Grip DOL	1.15	TC	0.66	Vert(LL)	-0.12 11-12	>999	240	MT20	244/190
CDL	10.0	Lumber DOL	1.15	BC	0.82	Vert(TL)	-0.29 13-14	>707	180		
CLL	0.0 *	Rep Stress Incr	YES	WB	0.78	Horz(TL)	0.02 10	n/a	n/a		
CDL	10.0	Code	IRC2009/TPI2007	(Matrix)		Attic	0.08 12-13	956	360	Weight: 289 lb	FT = 5%

UMBER-
OP CHORD 2x8 SP No.2 *Except* 1-3: 2x4 SP No.2
OT CHORD 2x6 SP No.2 *Except* 11-13: 2x12 SP No.2
EBS 2x4 SP No.3 *Except* 9-10: 2x4 SP No.2

BRACING-
TOP CHORD Structural wood sheathing directly applied or 3-10-14 oc purlins, except end verticals.
BOT CHORD Rigid ceiling directly applied or 6-1-0 oc bracing.
JOINTS 1 Brace at Jt(s): 15

MiTek recommends that Stabilizers and required cross bracing be installed during truss erection, in accordance with Stabilizer Installation guide.

EACTIONS. (lb/size) 2=1016/0-4-0 (min. 0-1-8), 10=1266/0-3-8 (min. 0-1-8), 12=1817/0-3-8 (min. 0-2-3)
Max. Horz. 2=355(LC 5)
Max. Uplift 2=-63(LC 6), 10=-10(LC 7), 12=-91(LC 6)
Max. Grav. 2=1016(LC 1), 10=1277(LC 12), 12=1852(LC 11)

ORCES. (lb) - Maximum Compression/Maximum Tension
OP CHORD 1-2=0/33, 2-3=-1542/108, 3-4=-866/133, 4-5=-804/146, 5-6=-443/69, 6-7=-469/74, 7-8=-815/141, 8-9=-782/76, 9-10=-1245/21
OT CHORD 2-14=-68/1247, 13-14=-68/1229, 12-13=0/684, 11-12=0/654, 10-11=-38/66
EBS 3-14=0/578, 3-13=-721/205, 4-13=-376/155, 8-11=-391/80, 5-15=-406/151, 7-15=-406/151, 6-15=0/81, 9-11=0/1013

OTES-
1) Unbalanced roof live loads have been considered for this design.
2) Wind: ASCE 7-05; 90mph; TCDL=6.0psf; BCDL=3.0psf; h=25ft; Cat. II; Exp B; enclosed; MWFRS (low-rise) gable end zone and C-C Exterior(2) zone; cantilever left and right exposed ; end vertical left and right exposed;C-C for members and forces & MWFRS for reactions shown; Lumber DOL=1.15 plate grip DOL=1.15
3) This truss has been designed for a 20.0 psf bottom chord live load nonconcurrent with any other live loads.
4) * This truss has been designed for a live load of 20.0psf on the bottom chord in all areas where a rectangle 3-6-0 tall by 2-0-0 wide will fit between the bottom chord and any other members.
5) Ceiling dead load (5.0 psf) on member(s). 4-5, 7-8, 5-15, 7-15; Wall dead load (5.0psf) on member(s).4-13, 8-11
6) Bottom chord live load (40.0 psf) and additional bottom chord dead load (0.0 psf) applied only to room. 12-13, 11-12
7) Provide mechanical connection (by others) of truss to bearing plate capable of withstanding 63 lb uplift at joint 2, 10 lb uplift at joint 10 and 91 lb uplift at joint 12.
8) "Semi-rigid pitchbreaks with fixed heels" Member end fixity model was used in the analysis and design of this truss.
9) Attic room checked for L/360 deflection.

COMMONWEALTH OF VIRGINIA
FRANK R. LASSITER
Lic. No. 034728
PROFESSIONAL ENGINEER

March 20,2015

WARNING - Verify design parameters and READ NOTES ON THIS AND INCLUDED MITEK REFERENCE PAGE MII-7473 rev. 1/23/2014 BEFORE USE.
Design valid for use only with MiTek connectors. This design is based only upon parameters shown, and is for an individual building component. Applicability of design parameters and proper incorporation of component is responsibility of building designer - not truss designer. Bracing shown is for lateral support of individual web members only. Additional temporary bracing to insure stability during construction is the responsibility of the erector. Additional permanent bracing of the overall structure is the responsibility of the building designer. For general guidance regarding fabrication, quality control, storage, delivery, erection and bracing, consult ANSI/TPI1 Quality Criteria, DSB-89 and BCSI Building Component Safety Information, available from Truss Plate Institute, 281 N. Lee Street, Suite 312, Alexandria, VA 22314.
If Southern Pine (SP) lumber is specified, the design values are those effective 06/01/2013 by ALSC.

ENGINEERING BY TRENCO
A MiTek Affiliate
818 Soundside Road
Edenton, NC 27932

Job	Truss	Truss Type	Qty	Ply	SAVANNAH W/ ROG & PART ATTIC
25917	T-1XG	GABLE	1	1	E8659953

Structural Technologies, Doswell, VA 23047

Job Reference (optional)

7.610 s Jan 16 2015 MiTek Industries, Inc. Fri Mar 20 15:15:11 2015 Page 1

ID:hNjBGyXDZHd0w6QHrgvER7yQsfP-otgS71YpgifVBju?gZBXU?kqxCmyHGqLBO5XhzZ0T_

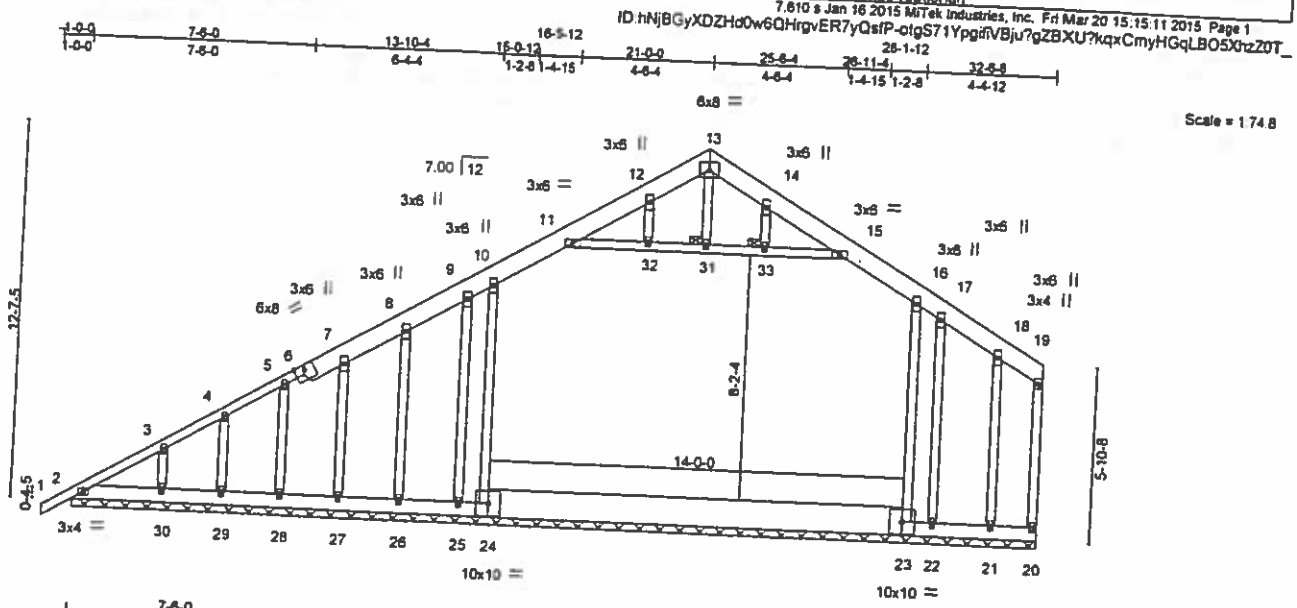

LOADING (psf)		SPACING-	2-0-0	CSI.		DEFL.	in	(loc)	l/defl	L/d	PLATES	GRIP
TCLL	20.0	Plate Grip DOL	1.15	TC	0.34	Vert(LL)	-0.00	1	n/r	120	MT20	244/190
TCDL	10.0	Lumber DOL	1.15	BC	0.71	Vert(TL)	0.00	1	n/r	120		
BCLL	0.0 *	Rep Stress Incr	YES	WB	0.83	Horz(TL)	0.00	20	n/a	n/a		
BCDL	10.0	Code IRC2009/TPI2007		(Matrix)							Weight: 323 lb	FT = 5%

LUMBER-
TOP CHORD 2x8 SP No.2 *Except* 1-6: 2x4 SP No.2
BOT CHORD 2x6 SP No.2 *Except* 23-24: 2x12 SP No.2
WEBS 2x4 SP No.3 *Except* 19-20: 2x4 SP No.2
OTHERS 2x4 SP No.2

BRACING-
TOP CHORD Structural wood sheathing directly applied or 6-0-0 oc purlins, except end verticals.
BOT CHORD Rigid ceiling directly applied or 10-0-0 oc bracing. Except: 6-0-0 oc bracing: 23-24
JOINTS 1 Brace at Jt(s): 31, 33

MiTek recommends that Stabilizers and required cross bracing be installed during truss erection, in accordance with Stabilizer Installation guide.

REACTIONS. (lb/size) 2=177/32-6-8 (min. 0-4-3), 24=2127/32-6-8 (min. 0-4-3), 23=2091/32-6-8 (min. 0-4-3), 20=86/32-6-8 (min. 0-4-3), 25=-863/32-6-8 (min. 0-4-3), 26=65/32-6-8 (min. 0-4-3), 27=137/32-6-8 (min. 0-4-3), 28=178/32-6-8 (min. 0-4-3), 29=135/32-6-8 (min. 0-4-3), 30=228/32-6-8 (min. 0-4-3), 22=-821/32-6-8 (min. 0-4-3), 21=-1/32-6-8 (min. 0-4-3)
Max Horz 2=355(LC 5)
Max Uplift 2=-95(LC 4), 20=-30(LC 7), 25=-890(LC 12), 26=-41(LC 4), 27=-49(LC 6), 28=-47(LC 6), 29=-45(LC 6), 30=-54(LC 6), 22=-863(LC 10), 21=-87(LC 4)
Max Grav 2=178(LC 11), 24=2127(LC 1), 23=2091(LC 1), 20=86(LC 1), 26=181(LC 2), 27=137(LC 1), 28=178(LC 1), 29=135(LC 11), 30=241(LC 2), 21=153(LC 2)

FORCES. (lb) - Maximum Compression/Maximum Tension
TOP CHORD 1-2=0/32, 2-3=-334/250, 3-4=-299/243, 4-5=-272/241, 5-7=-237/228, 7-8=-216/228, 8-9=-199/273, 9-10=-188/275, 10-11=-249/180, 11-12=-587/59, 12-13=-526/83, 13-14=-525/83, 14-15=-587/59, 15-16=-248/180, 16-17=-44/150, 17-18=-42/135, 18-19=-57/103, 19-20=-80/77
BOT CHORD 2-30=-44/67, 29-30=-44/67, 28-29=-44/67, 27-28=-44/67, 26-27=-44/68, 25-26=-44/68, 24-25=-35/114, 23-24=-43/67, 22-23=-31/111, 21-22=-40/68, 20-21=-40/67
WEBS 10-24=-847/90, 16-23=-813/20, 11-32=-21/513, 31-32=-21/512, 31-33=-21/512, 15-33=-21/513, 13-31=-2/107, 12-32=-50/24, 9-25=-43/23, 8-26=0/82, 7-27=-127/58, 5-28=-127/60, 4-29=-109/55, 3-30=-157/71, 14-33=-51/18, 17-22=-71/20, 18-21=0/124

NOTES-
1) Unbalanced roof live loads have been considered for this design.
2) Wind: ASCE 7-05; 90mph; TCDL=6.0psf; BCDL=3.0psf; h=25ft; Cat. II; Exp B; enclosed; MWFRS (low-rise) gable end zone and C-C Exterior(2) zone; cantilever left and right exposed ; end vertical left and right exposed;C-C for members and forces & MWFRS for reactions shown; Lumber DOL=1.15 plate grip DOL=1.15
3) Truss designed for wind loads in the plane of the truss only. For studs exposed to wind (normal to the face), see Standard Industry Gable End Details as applicable, or consult qualified building designer as per ANSI/TPI 1.
4) All plates are 2x4 MT20 unless otherwise indicated.
5) Gable requires continuous bottom chord bearing.
6) Gable studs spaced at 2-0-0 oc.
7) This truss has been designed for a 20.0 psf bottom chord live load nonconcurrent with any other live loads.
8) This truss has been designed for a live load of 20.0psf on the bottom chord in all areas where a rectangle 3-6-0 tall by 2-0-0 wide will fit between the bottom chord and any other members, with BCDL = 10.0psf.

Continued on page 2

COMMONWEALTH OF VIRGINIA
FRANK R. LASSITER
Lic. No. 034728
PROFESSIONAL ENGINEER

March 20,2015

WARNING - Verify design parameters and READ NOTES ON THIS AND INCLUDED MITEK REFERENCE PAGE MII-7473 rev. 1/29/2014 BEFORE USE
Design valid for use only with MiTek connectors. This design is based only upon parameters shown, and is for an individual building component. Applicability of design parameters and proper incorporation of component is responsibility of building designer - not truss designer. Bracing shown is for lateral support of individual web members only. Additional temporary bracing to insure stability during construction is the responsibility of the erector. Additional permanent bracing of the overall structure is the responsibility of the building designer. For general guidance regarding fabrication, quality control, storage, delivery, erection and bracing, consult ANSI/TPI1 Quality Criteria, DSB-89 and BCSI Building Component Safety Information, available from Truss Plate Institute, 281 N. Lee Street, Suite 312, Alexandria, VA 22314.
If Southern Pine (SP) lumber is specified, the design values are those effective 06/01/2013 per NDS.

ENGINEERING BY TRENCO A MiTek Affiliate

NOTES-

9) Ceiling dead load (5.0 psf) on member(s). 10-11, 15-16, 11-32, 31-32, 31-33, 15-33; Wall dead load (6.0psf) on member(s).10-24, 16-23

10) Provide mechanical connection (by others) of truss to bearing plate capable of withstanding 95 lb uplift at joint 2, 30 lb uplift at joint 20, 890 lb uplift at joint 25, 41 lb uplift at joint 26, 49 lb uplift at joint 27, 47 lb uplift at joint 28, 45 lb uplift at joint 29, 54 lb uplift at joint 30, 863 lb uplift at joint 22 and 87 lb uplift at joint 21.

11) "Semi-rigid pitchbreaks with fixed heels" Member end fixity model was used in the analysis and design of this truss.

12) Attic room checked for L/360 deflection.

WARNING - Verify design parameters and READ NOTES ON THIS AND INCLUDED MITEK REFERENCE PAGE MII-7473 rev. 1/29/2014 BEFORE USE
Design valid for use only with MiTek connectors. This design is based only upon parameters shown, and is for an individual building component. Applicability of design parameters and proper incorporation of component is responsibility of building designer - not truss designer. Bracing shown is for lateral support of individual web members only. Additional temporary bracing to insure stability during construction is the responsibility of the erector. Additional permanent bracing of the overall structure is the responsibility of the building designer. For general guidance regarding fabrication, quality control, storage, delivery, erection and bracing, consult ANSI/TPI1 Quality Criteria, DSB-89 and BCSI Building Component Safety Information, available from Truss Plate Institute, 281 N. Lee Street, Suite 312, Alexandria, VA 22314.
If Southern Pine (SP) lumber is specified, the design values are those effective [illegible]

ENGINEERING BY TRENCO A MiTek Affiliate
818 Soundside Road

Job	Truss	Truss Type	Qty	Ply	SAVANNAH W/ ROG & PART ATTIC
25917	T-1XGT	ATTIC	1	2	E8659954

Structural Technologies, Doswell, VA 23047

Job Reference (optional)

7.610 s Jan 16 2015 MiTek Industries, Inc. Fri Mar 20 15:15:11 2015 Page 1

ID:hNjBGyXDZHd0w6QHrgvER7yOsfP-otgS71YpgifVBju?gZBXU?kuxCDyNVqLBO5XhzZ0T_

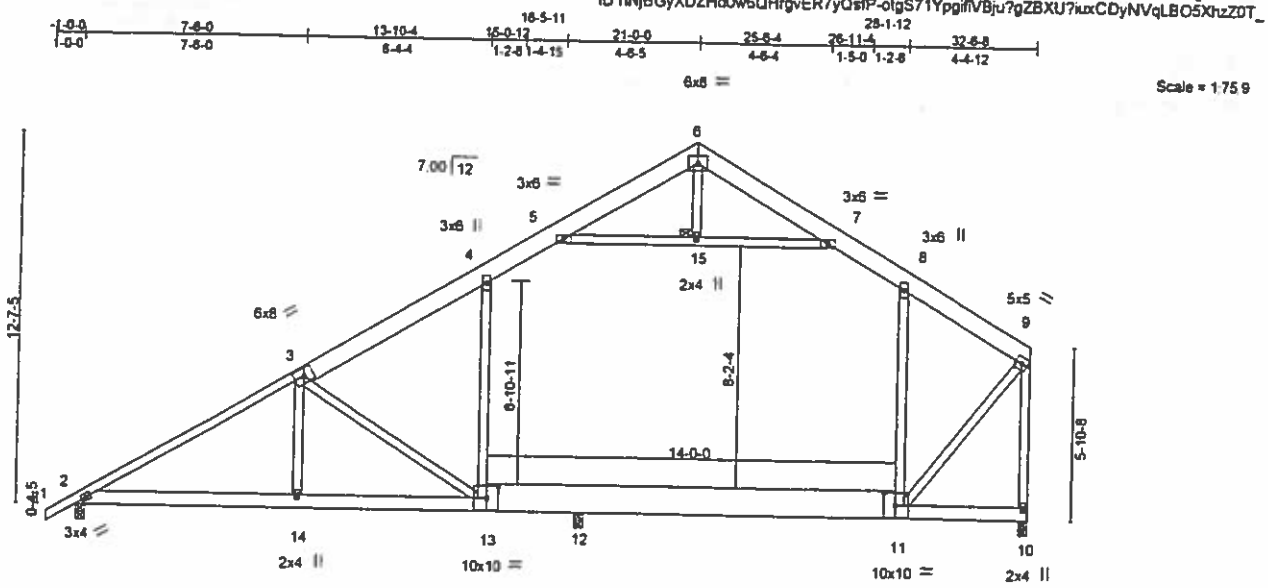

Plate Offsets (X,Y)-- [11:0-4-12,0-5-0], [13:0-4-12,0-5-0]

LOADING (psf)		SPACING- 2-0-0		CSI.		DEFL.	in	(loc)	l/defl	L/d	PLATES	GRIP
TCLL	20.0	Plate Grip DOL	1.15	TC	0.46	Vert(LL)	-0.11	13-14	>999	240	MT20	244/190
TCDL	10.0	Lumber DOL	1.15	BC	0.74	Vert(TL)	-0.24	13-14	>851	180		
BCLL	0.0 *	Rep Stress Incr	NO	WB	0.43	Horz(TL)	0.02	10	n/a	n/a		
BCDL	10.0	Code IRC2009/TPI2007		(Matrix)		Attic	-0.08	12-13	956	360	Weight: 578 lb	FT = 5%

LUMBER-
TOP CHORD 2x8 SP No.2 *Except*
1-3: 2x4 SP No.2
BOT CHORD 2x6 SP No.2 *Except*
11-13: 2x12 SP No.2
WEBS 2x4 SP No.3 *Except*
9-10: 2x4 SP No.2

BRACING-
TOP CHORD Structural wood sheathing directly applied or 6-0-0 oc purlins, except end verticals.
BOT CHORD Rigid ceiling directly applied or 10-0-0 oc bracing. Except:
6-0-0 oc bracing: 10-11.
JOINTS 1 Brace at Jt(s): 15

REACTIONS. (lb/size) 2=1398/0-4-0 (min. 0-1-8), 10=2194/0-3-8 (min. 0-1-8), 12=2506/0-3-8 (min. 0-1-8)
Max Horz 2=355(LC 5)
Max Uplift 2=-94(LC 6), 10=-85(LC 7), 12=-147(LC 6)
Max Grav 2=1398(LC 1), 10=2206(LC 12), 12=2541(LC 11)

FORCES. (lb) - Maximum Compression/Maximum Tension
TOP CHORD 1-2=0/33, 2-3=-2339/163, 3-4=-1602/176, 4-5=-1855/229, 5-6=-2574/230, 6-7=-2613/248, 7-8=-1909/215, 8-9=-1437/122, 9-10=-2200/97
BOT CHORD 2-14=-124/1937, 13-14=-123/1911, 12-13=0/1363, 11-12=0/1313, 10-11=-38/66
WEBS 3-14=-5/627, 3-13=-729/207, 4-13=-1022/185, 8-11=-1292/146, 5-15=-224/1031, 7-15=-224/1031, 6-15=0/48, 9-11=-24/2074

NOTES-
1) 2-ply truss to be connected together with 12d (0.131"x3.25") nails as follows:
Top chords connected as follows: 2x4 - 1 row at 0-9-0 oc clinched, 2x8 - 2 rows staggered at 0-9-0 oc clinched.
Bottom chords connected as follows: 2x6 - 2 rows staggered at 0-9-0 oc clinched, 2x12 - 2 rows staggered at 0-9-0 oc clinched.
Webs connected as follows: 2x4 - 1 row at 0-9-0 oc clinched, Except member 6-15 2x4 - 1 row at 0-5-0 oc clinched.
2) All loads are considered equally applied to all plies, except if noted as front (F) or back (B) face in the LOAD CASE(S) section. Ply to ply connections have been provided to distribute only loads noted as (F) or (B), unless otherwise indicated.
3) Unbalanced roof live loads have been considered for this design.
4) Wind: ASCE 7-05; 90mph; TCDL=6.0psf; BCDL=3.0psf; h=25ft; Cat. II; Exp B; enclosed; MWFRS (low-rise) gable end zone and C-C Exterior(2) zone; cantilever left and right exposed ; end vertical left and right exposed;C-C for members and forces & MWFRS for reactions shown; Lumber DOL=1.15 plate grip DOL=1.15
5) This truss has been designed for a 20.0 psf bottom chord live load nonconcurrent with any other live loads.
6) * This truss has been designed for a live load of 20.0psf on the bottom chord in all areas where a rectangle 3-6-0 tall by 2-0-0 wide will fit between the bottom chord and any other members.
7) Ceiling dead load (5.0 psf) on member(s). 4-5, 7-8, 5-15, 7-15; Wall dead load (6.0psf) on member(s).4-13, 8-11
8) Bottom chord live load (40.0 psf) and additional bottom chord dead load (0.0 psf) applied only to room. 12-13, 11-12
9) Provide mechanical connection (by others) of truss to bearing plate capable of withstanding 94 lb uplift at joint 2, 85 lb uplift at joint 10 and 147 lb uplift at joint 12.
10) "Semi-rigid pitchbreaks with fixed heels" Member end fixity model was used in the analysis and design of this truss.
Hanger(s) or other connection device(s) shall be provided sufficient to support concentrated load(s) 2000 lb down and 161 lb up at 21-0-0 on top chord. The design/selection of such connection device(s) is the responsibility of others.
Attic room checked for L/360 deflection.

Continued on page 2

COMMONWEALTH OF VIRGINIA
FRANK R. LASSITER
Lic. No. 034728
PROFESSIONAL ENGINEER

March 20,2015

WARNING - Verify design parameters and READ NOTES ON THIS AND INCLUDED MITEK REFERENCE PAGE MII-1473 rev. 1/29/2014 BEFORE USE.
Design valid for use only with MiTek connectors. This design is based only upon parameters shown, and is for an individual building component. Applicability of design parameters and proper incorporation of component is responsibility of building designer - not truss designer. Bracing shown is for lateral support of individual web members only. Additional temporary bracing to insure stability during construction is the responsibility of the erector. Additional permanent bracing of the overall structure is the responsibility of the building designer. For general guidance regarding fabrication, quality control, storage, delivery, erection and bracing, consult ANSI/TPI1 Quality Criteria, DSB-89 and BCSI Building Component Safety Information, available from Truss Plate Institute, 281 N. Lee Street, Suite 312, Alexandria, VA 22314.
If Southern Pine (SP) lumber is specified, the design values are those effective 06/01/2013 by ALSC.

ENGINEERING BY TRENCO
A MiTek Affiliate
818 Soundside Road
Edenton, NC 27932

LOAD CASE(S) Standard

1) Dead + Roof Live (balanced) + Attic Floor: Lumber Increase=1.15, Plate Increase=1.15

Uniform Loads (plf)

Vert: 1-4=-60, 4-5=-70, 5-6=-60, 6-7=-60, 7-8=-70, 8-9=-60, 2-13=-20, 12-13=-100, 11-12=-100, 10-11=-20, 5-7=-10

Drag: 4-13=-12, 8-11=-12

Concentrated Loads (lb)

Vert: 6=-2000(F)

WARNING - Verify design parameters and READ NOTES ON THIS AND INCLUDED MITEK REFERENCE PAGE MT1-1473 rev. 1/29/2014 BEFORE USE.
Design valid for use only with MiTek connectors. This design is based only upon parameters shown, and is for an individual building component. Applicability of design parameters and proper incorporation of component is responsibility of building designer - not truss designer. Bracing shown is for lateral support of individual web members only. Additional temporary bracing to insure stability during construction is the responsibility of the erector. Additional permanent bracing of the overall structure is the responsibility of the building designer. For general guidance regarding fabrication, quality control, storage, delivery, erection and bracing, consult ANSI/TPI1 Quality Criteria, DSB-89 and BCSI Building Component Safety Information, available from Truss Plate Institute, 281 N. Lee Street, Suite 312, Alexandria, VA 22314.
If Southern Pine (SP) lumber is specified, the design values are those assigned by the SPIB ...

ENGINEERING BY TRENCO A MiTek Affiliate
818 Soundside Road

Job	Truss	Truss Type	Qty	Ply	SAVANNAH W/ ROG & PART ATTIC
25917	T-2	Attic	5	1	E6659955

Structural Technologies, Doswell, VA 23047

Job Reference (optional)

7.610 s Jan 16 2015 MiTek Industries, Inc. Fri Mar 20 15:15:12 2015 Page 1

ID:hNjBGyXDZHd0w6QHrgvER7yQsfP-G4EqLNZSR0oZ6LI4ZN5Q3hYlhLXFhigzar7e2BzZ0Sz

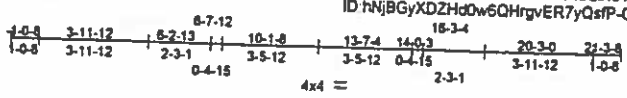

Scale = 1:80.9

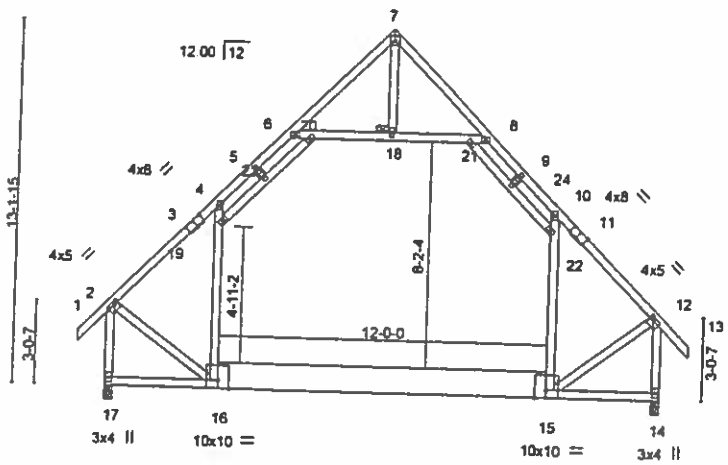

Plate Offsets (X,Y)— [2:0-1-12,0-1-8], [3:0-4-0,Edge], [11:0-4-0,Edge], [12:0-1-12,0-1-8], [15:0-4-12,Edge], [16:0-4-12,Edge]

LOADING (psf)		SPACING-	2-0-0	CSI.		DEFL.	in	(loc)	l/defl	L/d	PLATES	GRIP
TCLL	20.0	Plate Grip DOL	1.15	TC	0.97	Vert(LL)	-0.33	15-16	>719	240	MT20	244/190
TCDL	10.0	Lumber DOL	1.15	BC	0.82	Vert(TL)	-0.50	15-16	>480	180		
BCLL	0.0 *	Rep Stress Incr	YES	WB	0.95	Horz(TL)	0.03	14	n/a	n/a		
BCDL	10.0	Code IRC2009/TPI2007		(Matrix)		Attic	-0.17	15-16	870	360	Weight: 188 lb	FT = 5%

LUMBER-

TOP CHORD 2x4 SP No.1
BOT CHORD 2x4 SP No.2 *Except*
15-16: 2x12 SP No.2
WEBS 2x4 SP No.3 *Except*
2-17,12-14: 2x4 SP No.2

BRACING-

TOP CHORD Structural wood sheathing directly applied, except end verticals.
BOT CHORD Rigid ceiling directly applied or 7-1-14 oc bracing.
JOINTS 1 Brace at Jt(s): 18

MiTek recommends that Stabilizers and required cross bracing be installed during truss erection, in accordance with Stabilizer Installation guide.

REACTIONS. (lb/size) 17=1464/0-3-8 (min. 0-1-12), 14=1464/0-3-8 (min. 0-1-12)
Max Horz 17=-332(LC 4)
Max Uplift 17=-3(LC 7), 14=-3(LC 6)

FORCES. (lb) - Maximum Compression/Maximum Tension

TOP CHORD 1-2=0/50, 2-4=-1134/79, 4-5=-905/191, 5-6=-852/203, 6-7=-224/46, 7-8=-224/46, 8-9=-852/200, 9-10=-905/189, 10-12=-1134/79, 12-13=0/50, 2-17=-1414/49, 12-14=-1414/49
BOT CHORD 16-17=-330/346, 15-16=-44/663, 14-15=0/70
WEBS 15-22=-54/416, 10-22=-167/428, 16-19=-46/416, 4-19=-160/428, 6-20=-744/255, 18-20=-625/209, 18-21=-625/209, 8-21=-744/252, 7-18=0/119, 2-16=-32/734, 12-15=-39/734, 19-23=-257/271, 20-23=-257/271, 21-24=-254/271, 22-24=-254/271, 5-23=-37/33, 9-24=-37/33

NOTES-

1) Unbalanced roof live loads have been considered for this design.
2) Wind: ASCE 7-05; 90mph; TCDL=6.0psf; BCDL=3.0psf; h=25ft; Cat. II; Exp B; enclosed; MWFRS (low-rise) gable end zone and C-C Exterior(2) zone; cantilever left and right exposed ; end vertical left and right exposed;C-C for members and forces & MWFRS for reactions shown; Lumber DOL=1.15 plate grip DOL=1.15
3) All plates are 2x4 MT20 unless otherwise indicated.
4) This truss has been designed for a 20.0 psf bottom chord live load nonconcurrent with any other live loads.
5) * This truss has been designed for a live load of 20.0psf on the bottom chord in all areas where a rectangle 3-6-0 tall by 2-0-0 wide will fit between the bottom chord and any other members.
6) Ceiling dead load (5.0 psf) on member(s). 6-20, 18-20, 18-21, 8-21; Wall dead load (6.0psf) on member(s) 15-22, 10-22, 16-19, 4-19
7) Bottom chord live load (40.0 psf) and additional bottom chord dead load (0.0 psf) applied only to room. 15-16
8) Provide mechanical connection (by others) of truss to bearing plate capable of withstanding 3 lb uplift at joint 17 and 3 lb uplift at joint 14.
9) "Semi-rigid pitchbreaks with fixed heels" Member end fixity model was used in the analysis and design of this truss.
10) Attic room checked for L/360 deflection.

COMMONWEALTH OF VIRGINIA
FRANK R. LASSITER
Lic. No. 034728
PROFESSIONAL ENGINEER

March 20,2015

WARNING - Verify design parameters and READ NOTES ON THIS AND INCLUDED MITEK REFERENCE PAGE MII-7473 rev. 1/29/2014 BEFORE USE
Design valid for use only with MiTek connectors. This design is based only upon parameters shown, and is for an individual building component. Applicability of design parameters and proper incorporation of component is responsibility of building designer - not truss designer. Bracing shown is for lateral support of individual web members only. Additional temporary bracing to insure stability during construction is the responsibility of the erector. Additional permanent bracing of the overall structure is the responsibility of the building designer. For general guidance regarding fabrication, quality control, storage, delivery, erection and bracing, consult ANSI/TPI1 Quality Criteria, DSB-89 and BCSI Building Component Safety Information, available from Truss Plate Institute, 281 N. Lee Street, Suite 312, Alexandria, VA 22314.
If Southern Pine (SP) lumber is specified, the design values are those effective 06/01/2013 by ALSC

ENGINEERING BY TRENCO A MiTek Affiliate
818 Soundside Road
Edenton, NC 27932

Job	Truss	Truss Type	Qty	Ply	SAVANNAH W/ ROG & PART ATTIC
25917	T-2G	Attic	1	1	E8659956

Job Reference (optional)

Structural Technologies, Doswell, VA 23047

7.610 s Jan 16 2015 MiTek Industries, Inc. Fri Mar 20 15:15:13 2015 Page 1

ID:hNjBGyXDZHd0w6QHrgvER7yQsfP-kGoCYjZ4CJwQkVtH65cfcu5?5Iv6OEz7pVtBbazZ0Sy

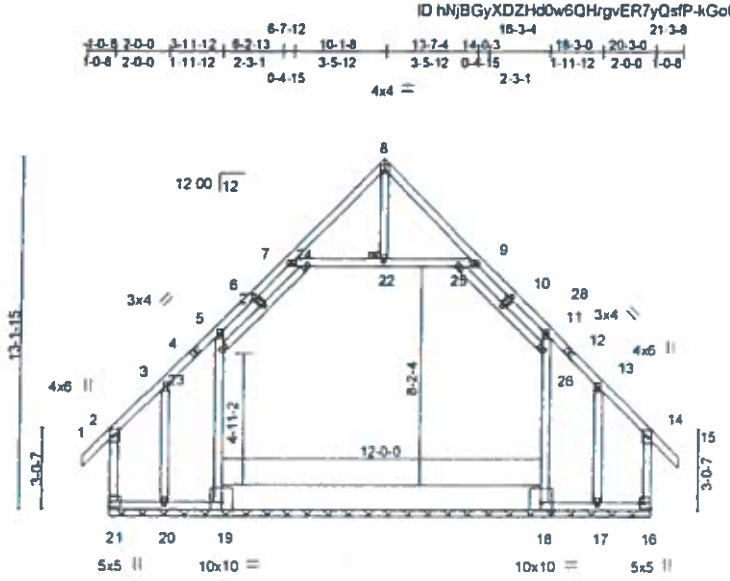

Plate Offsets (X,Y)-- [2:0-3-0,0-1-12], [14:0-3-0,0-1-12], [16:Edge,0-3-8]

LOADING (psf)		SPACING- 2-0-0		CSI.		DEFL.	in	(loc)	l/defl	L/d	PLATES	GRIP
TCLL	20.0	Plate Grip DOL	1.15	TC	0.67	Vert(LL)	-0.00	14	n/r	120	MT20	244/190
TCDL	10.0	Lumber DOL	1.15	BC	0.59	Vert(TL)	0.00	14-15	n/r	120		
BCLL	0.0 *	Rep Stress Incr	YES	WB	0.62	Horz(TL)	0.00	16	n/a	n/a		
BCDL	10.0	Code IRC2009/TPI2007		(Matrix)							Weight: 188 lb	FT = 5%

LUMBER-
TOP CHORD 2x4 SP No.2
BOT CHORD 2x4 SP No.2 *Except*
18-19: 2x12 SP No.2
WEBS 2x4 SP No.3 *Except*
2-21,14-16: 2x4 SP No.2

BRACING-
TOP CHORD Structural wood sheathing directly applied or 6-0-0 oc purlins, except end verticals.
BOT CHORD Rigid ceiling directly applied or 10-0-0 oc bracing.
JOINTS 1 Brace at Jt(s): 22

MiTek recommends that Stabilizers and required cross bracing be installed during truss erection, in accordance with Stabilizer installation guide.

REACTIONS (lb/size) 21=614/20-3-0 (min. 0-2-14), 19=1125/20-3-0 (min. 0-2-14), 18=1125/20-3-0 (min. 0-2-14), 16=614/20-3-0 (min. 0-2-14), 20=514/20-3-0 (min. 0-2-14), 17=514/20-3-0 (min. 0-2-14)
Max Horz 21=-332(LC 4)
Max Uplift 21=-210(LC 4), 16=-207(LC 5), 20=-514(LC 1), 17=-514(LC 1)
Max Grav 21=614(LC 1), 19=1125(LC 1), 18=1125(LC 1), 16=614(LC 1), 20=119(LC 4), 17=143(LC 5)

FORCES. (lb) - Maximum Compression/Maximum Tension
TOP CHORD 1-2=0/50, 2-3=-362/162, 3-5=-98/214, 5-6=-273/205, 6-7=-220/216, 7-8=-260/39, 8-9=-260/39, 9-10=-220/216, 10-11=-273/205, 11-13=-98/214, 13-14=-362/160, 14-15=0/50, 2-21=-444/130, 14-16=-444/128
BOT CHORD 20-21=-136/225, 19-20=-133/225, 18-19=-121/210, 17-18=-108/200, 16-17=-106/195
WEBS 18-26=-597/0, 11-26=-468/109, 19-23=-597/0, 5-23=-468/110, 7-24=0/295, 22-24=0/266, 22-25=0/266, 9-25=0/295, 8-22=-15/20, 23-27=-164/103, 24-27=-164/103, 25-28=-164/103, 26-28=-164/103, 6-27=0/14, 10-28=0/14, 3-20=-24/263, 13-17=-24/263

NOTES-
Unbalanced roof live loads have been considered for this design.
Wind: ASCE 7-05; 90mph; TCDL=6.0psf; BCDL=3.0psf; h=25ft; Cat. II; Exp B; enclosed; MWFRS (low-rise); gable end zone and C-C Exterior(2) zone; cantilever left and right exposed ; end vertical left and right exposed;C-C for members and forces & MWFRS for reactions shown; Lumber DOL=1.15 plate grip DOL=1.15
All plates are 2x4 MT20 unless otherwise indicated.
Gable requires continuous bottom chord bearing.
This truss has been designed for a 20.0 psf bottom chord live load nonconcurrent with any other live loads.
* This truss has been designed for a live load of 20.0psf on the bottom chord in all areas where a rectangle 3-6-0 tall by 2-0-0 wide will fit between the bottom chord and any other members, with BCDL = 10.0psf.
Ceiling dead load (5.0 psf) on member(s). 7-24, 22-24, 22-25, 9-25; Wall dead load (5.0psf) on member(s).18-26, 11-26, 19-23, 5-23
Provide mechanical connection (by others) of truss to bearing plate capable of withstanding 210 lb uplift at joint 21, 207 lb uplift at joint 16, 514 lb uplift at joint 20 and 514 lb uplift at joint 17.
Semi-rigid pitchbreaks with fixed heels" Member end fixity model was used in the analysis and design of this truss.
Attic room checked for L/360 deflection.

COMMONWEALTH OF VIRGINIA
FRANK R. LASSITER
Lic. No. 034728
PROFESSIONAL ENGINEER

March 20,2015

WARNING - Verify design parameters and READ NOTES ON THIS AND INCLUDED MiTEK REFERENCE PAGE MII-7473 rev. 1/29/2014 BEFORE USE.
Design valid for use only with MiTek connectors. This design is based only upon parameters shown, and is for an individual building component. Applicability of design parameters and proper incorporation of component is responsibility of building designer - not truss designer. Bracing shown is for lateral support of individual web members only. Additional temporary bracing to insure stability during construction is the responsibility of the erector. Additional permanent bracing of the overall structure is the responsibility of the building designer. For general guidance regarding fabrication, quality control, storage, delivery, erection and bracing, consult ANSI/TPI1 Quality Criteria, DSB-89 and BCSI Building Component Safety Information, available from Truss Plate Institute, 281 N. Lee Street, Suite 312, Alexandria, VA 22314.

ENGINEERING BY TRENCO A MiTek Affiliate

Job	Truss	Truss Type	Qty	Ply	SAVANNAH W/ ROG & PART ATTIC
25917	T-2X	Attic	7	1	E8659957

Structural Technologies, Doswell, VA 23047

Job Reference (optional)

7.610 s Jan 16 2015 MiTek Industries, Inc. Fri Mar 20 15:15:14 2015 Page 1

ID:hNjBGyXDZHd0w6QHrgvER7yQsfP-CSMam3aizd2HMfSTgo7u96d599CX9boG19cf70zZ0Sx

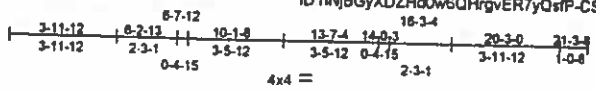

Scale = 1:60.9

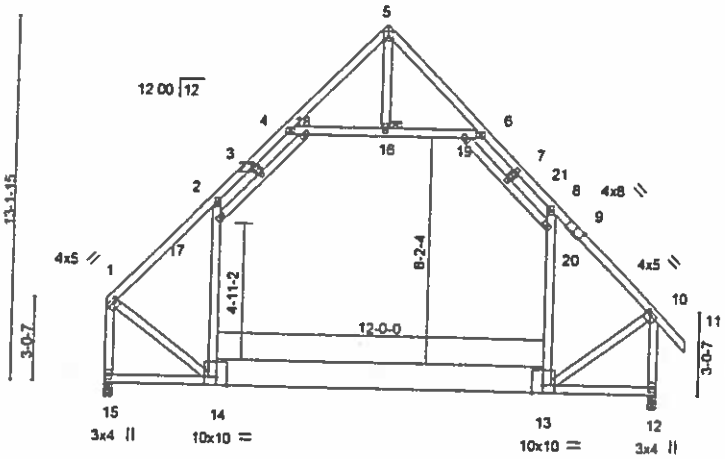

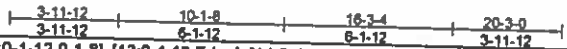

Plate Offsets (X,Y)-- [1:0-1-12,0-1-8], [9:0-4-0,Edge], [10:0-1-12,0-1-8], [13:0-4-12,Edge], [14:0-4-12,Edge]

LOADING (psf)		SPACING-	2-0-0	CSI.		DEFL.	in	(loc)	l/defl	L/d	PLATES	GRIP
TCLL	20.0	Plate Grip DOL	1.15	TC	0.97	Vert(LL)	-0.34	13-14	>707	240	MT20	244/190
TCDL	10.0	Lumber DOL	1.15	BC	0.83	Vert(TL)	-0.51	13-14	>471	180		
BCLL	0.0 *	Rep Stress Incr	YES	WB	0.97	Horz(TL)	0.03	12	n/a	n/a		
BCDL	10.0	Code IRC2009/TPI2007		(Matrix)		Attic	-0.17	13-14	860	360	Weight: 186 lb	FT = 5%

LUMBER-

TOP CHORD 2x4 SP No.1
BOT CHORD 2x4 SP No.2 *Except*
13-14: 2x12 SP No.2
WEBS 2x4 SP No.3 *Except*
1-15,10-12: 2x4 SP No.2

BRACING-

TOP CHORD Structural wood sheathing directly applied, except end verticals.
BOT CHORD Rigid ceiling directly applied or 7-1-14 oc bracing.
JOINTS 1 Brace at Jt(s): 16

MiTek recommends that Stabilizers and required cross bracing be installed during truss erection, in accordance with Stabilizer Installation guide.

REACTIONS. (lb/size) 15=1391/0-3-8 (min. 0-1-10), 12=1467/0-3-8 (min. 0-1-12)
Max Horz 15=-346(LC 4)
Max Uplift 12=-1(LC 7)

FORCES. (lb) - Maximum Compression/Maximum Tension

TOP CHORD 1-2=-1128/62, 2-3=-918/180, 3-4=-866/191, 4-5=-224/46, 5-6=-223/46, 6-7=-852/202, 7-8=-905/190, 8-10=-1138/73, 10-11=0/50, 1-15=-1337/30, 10-12=-1419/41
BOT CHORD 14-15=-309/354, 13-14=-42/665, 12-13=0/70
WEBS 13-20=-54/418, 8-20=-164/432, 14-17=-44/406, 2-17=-162/413, 4-18=-757/244, 16-18=-628/202, 16-19=-628/202, 6-19=-745/252, 5-16=0/120, 1-14=-39/748, 10-13=-37/737, 17-22=-253/283, 18-22=-253/283, 19-21=-257/270, 20-21=-257/270, 7-21=-36/33, 3-22=-37/31

NOTES-

1) Unbalanced roof live loads have been considered for this design.
2) Wind: ASCE 7-05; 90mph; TCDL=6.0psf; BCDL=3.0psf; h=25ft; Cat. II; Exp B; enclosed; MWFRS (low-rise) gable end zone and C-C Exterior(2) zone; cantilever left and right exposed ; end vertical left and right exposed;C-C for members and forces & MWFRS for reactions shown; Lumber DOL=1.15 plate grip DOL=1.15
3) All plates are 2x4 MT20 unless otherwise indicated.
4) This truss has been designed for a 20.0 psf bottom chord live load nonconcurrent with any other live loads.
5) * This truss has been designed for a live load of 20.0psf on the bottom chord in all areas where a rectangle 3-6-0 tall by 2-0-0 wide will fit between the bottom chord and any other members.
6) Ceiling dead load (5.0 psf) on member(s). 4-18, 16-18, 16-19, 6-19; Wall dead load (6.0psf) on member(s).13-20, 8-20, 14-17, 2-17
7) Bottom chord live load (40.0 psf) and additional bottom chord dead load (0.0 psf) applied only to room. 13-14
8) Provide mechanical connection (by others) of truss to bearing plate capable of withstanding 1 lb uplift at joint 12.
9) "Semi-rigid pitchbreaks with fixed heels" Member end fixity model was used in the analysis and design of this truss.
10) Attic room checked for L/360 deflection.

COMMONWEALTH OF VIRGINIA
FRANK R. LASSITER
Lic. No. 034728
PROFESSIONAL ENGINEER

March 20,2015

WARNING - Verify design parameters and READ NOTES ON THIS AND INCLUDED MITEK REFERENCE PAGE MII-7473 rev. 1/23/2014 BEFORE USE.
Design valid for use only with MiTek connectors. This design is based only upon parameters shown, and is for an individual building component. Applicability of design parameters and proper incorporation of component is responsibility of building designer - not truss designer. Bracing shown is for lateral support of individual web members only. Additional temporary bracing to insure stability during construction is the responsibility of the erector. Additional permanent bracing of the overall structure is the responsibility of the building designer. For general guidance regarding fabrication, quality control, storage, delivery, erection and bracing, consult ANSI/TPI1 Quality Criteria, DSB-89 and BCSI Building Component Safety Information available from Truss Plate Institute, 281 N. Lee Street, Suite 312, Alexandria, VA 22314.
If Southern Pine (SP) lumber is specified, the design values are those effective 06/01/2013 by ALSC

ENGINEERING BY TRENCO A MiTek Affiliate
818 Soundside Road

Job	Truss	Truss Type	Qty	Ply	SAVANNAH W ROG & PART ATTIC	E8659958
25917	T-3	COMMON	3	1	Job Reference (optional)	

Structural Technologies, Doswell, VA 23047

7.610 s Jan 16 2015 MiTek Industries, Inc. Fri Mar 20 15:15:15 2015 Page 1
ID:hNjBGyXDZHd0w6QHrgvER7yOsfP-gfwyzObKxxA8_p1fEWe7hJAS_Yb3uE1QGpMIfSzZ0Sw

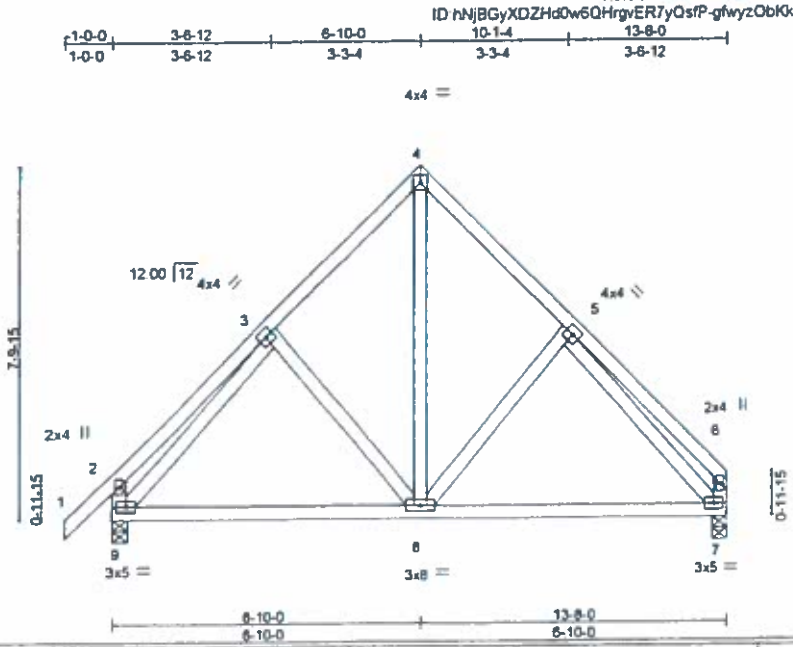

LOADING (psf)		SPACING-	2-0-0	CSI.		DEFL.	in	(loc)	l/defl	L/d	PLATES	GRIP
TCLL	20.0	Plate Grip DOL	1.15	TC	0.20	Vert(LL)	-0.08	8-9	>999	240	MT20	244/190
TCDL	10.0	Lumber DOL	1.15	BC	0.62	Vert(TL)	-0.14	8-9	>999	180		
BCLL	0.0 *	Rep Stress Incr	YES	WB	0.20	Horz(TL)	0.01	7	n/a	n/a		
BCDL	10.0	Code IRC2009/TPI2007		(Matrix)							Weight: 94 lb	FT = 5%

LUMBER-
TOP CHORD 2x4 SP No.2
BOT CHORD 2x4 SP No.2
WEBS 2x4 SP No.3 *Except*
2-9,6-7: 2x4 SP No.2

BRACING-
TOP CHORD Structural wood sheathing directly applied or 6-0-0 oc purlins, except end verticals.
BOT CHORD Rigid ceiling directly applied or 10-0-0 oc bracing.

MiTek recommends that Stabilizers and required cross bracing be installed during truss erection, in accordance with Stabilizer Installation guide.

REACTIONS. (lb/size) 9=607/0-4-0 (min. 0-1-8), 7=532/0-4-0 (min. 0-1-8)
Max Horz 9=200(LC 5)
Max Uplift 9=-87(LC 6), 7=-58(LC 6)
Max Grav 9=607(LC 1), 7=534(LC 2)

FORCES. (lb) - Maximum Compression/Maximum Tension
TOP CHORD 1-2=0/49, 2-3=-233/126, 3-4=-433/157, 4-5=-435/158, 5-6=-230/104, 2-9=-254/146, 6-7=-184/88
BOT CHORD 8-9=-93/319, 7-8=-14/326
WEBS 4-8=-150/488, 5-8=-128/137, 3-8=-117/133, 3-9=-377/17, 5-7=-371/28

NOTES-
Unbalanced roof live loads have been considered for this design.
Wind: ASCE 7-05; 90mph; TCDL=6.0psf; BCDL=3.0psf; h=25ft; Cat. II; Exp B; enclosed; MWFRS (low-rise) gable end zone and C-C Exterior(2) zone; cantilever left and right exposed ; end vertical left and right exposed;C-C for members and forces & MWFRS for reactions shown; Lumber DOL=1.15 plate grip DOL=1.15
This truss has been designed for a 20.0 psf bottom chord live load nonconcurrent with any other live loads.
* This truss has been designed for a live load of 20.0psf on the bottom chord in all areas where a rectangle 3-6-0 tall by 2-0-0 wide will fit between the bottom chord and any other members.
Provide mechanical connection (by others) of truss to bearing plate capable of withstanding 87 lb uplift at joint 9 and 58 lb uplift at joint 7.
"Semi-rigid pitchbreaks with fixed heels" Member end fixity model was used in the analysis and design of this truss.

COMMONWEALTH OF VIRGINIA
FRANK R. LASSITER
Lic. No. 034728
PROFESSIONAL ENGINEER

March 20,2015

WARNING - Verify design parameters and READ NOTES ON THIS AND INCLUDED MITEK REFERENCE PAGE MII-7473 rev. 1/29/2014 BEFORE USE.
Design valid for use only with MiTek connectors. This design is based only upon parameters shown, and is for an individual building component. Applicability of design parameters and proper incorporation of component is responsibility of building designer - not truss designer. Bracing shown is for lateral support of individual web members only. Additional temporary bracing to insure stability during construction is the responsibility of the erector. Additional permanent bracing of the overall structure is the responsibility of the building designer. For general guidance regarding fabrication, quality control, storage, delivery, erection and bracing, consult ANSI/TPI1 Quality Criteria, DSB-89 and BCSI Building Component Safety Information, available from Truss Plate Institute, 281 N. Lee Street, Suite 312, Alexandria, VA 22314.

ENGINEERING BY TRENCO A MiTek Affiliate
818 Soundside Road

Job	Truss	Truss Type	Qty	Ply	SAVANNAH W/ ROG & PART ATTIC
25917	T-3G	Common Supported Gable	1	1	E8659959

Structural Technologies, Doswell, VA 23047

Job Reference (optional)

7.610 s Jan 16 2015 MiTek Industries, Inc. Fri Mar 20 15:15:15 2015 Page 1

ID:hNjBGyXDZHd0w6QHrgvER7yQsfP-gfwyzObKkxA8_p1fEWe7hJAT7YjzuEnQGpMlfSzZ0Sw

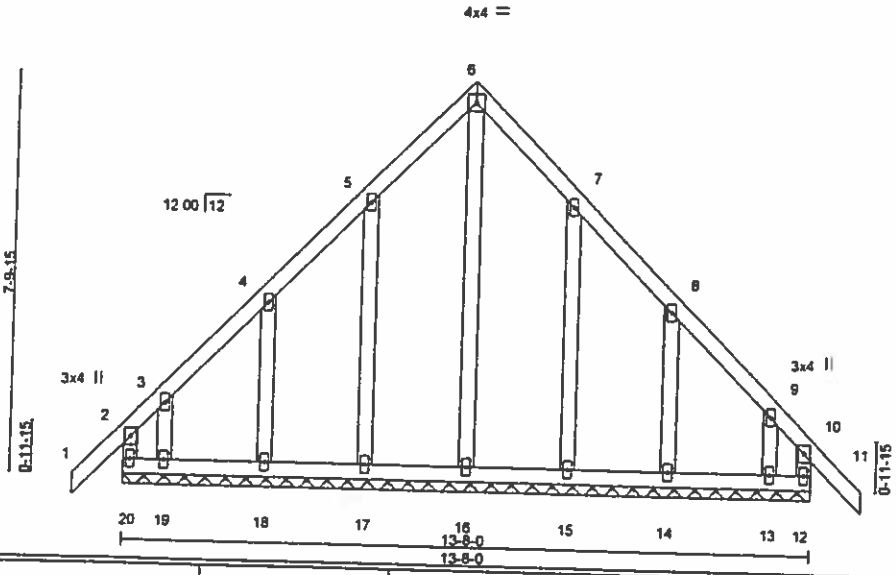

LOADING (psf)		SPACING-	2-0-0	CSI.		DEFL.	in	(loc)	l/defl	L/d	PLATES	GRIP
TCLL	20.0	Plate Grip DOL	1.15	TC	0.13	Vert(LL)	-0.00	11	n/r	120	MT20	244/190
TCDL	10.0	Lumber DOL	1.15	BC	0.11	Vert(TL)	-0.01	11	n/r	120		
BCLL	0.0 *	Rep Stress Incr	YES	WB	0.22	Horz(TL)	0.00	12	n/a	n/a		
BCDL	10.0	Code IRC2009/TPI2007		(Matrix)							Weight: 96 lb	FT = 5%

LUMBER-
TOP CHORD 2x4 SP No.2
BOT CHORD 2x4 SP No.2
WEBS 2x4 SP No.2
OTHERS 2x4 SP No.2

BRACING-
TOP CHORD Structural wood sheathing directly applied or 6-0-0 oc purlins, except end verticals.
BOT CHORD Rigid ceiling directly applied or 6-0-0 oc bracing

MiTek recommends that Stabilizers and required cross bracing be installed during truss erection, in accordance with Stabilizer Installation guide.

REACTIONS. (lb/size) 20=125/13-8-0 (min. 0-1-8), 12=125/13-8-0 (min. 0-1-8), 16=153/13-8-0 (min. 0-1-8), 17=165/13-8-0 (min. 0-1-8), 18=166/13-8-0 (min. 0-1-8), 19=71/13-8-0 (min. 0-1-8), 15=165/13-8-0 (min. 0-1-8), 14=166/13-8-0 (min. 0-1-8), 13=71/13-8-0 (min. 0-1-8)
Max Horz 20=-186(LC 4)
Max Uplift 20=-170(LC 4), 12=-132(LC 5), 17=-86(LC 6), 18=-88(LC 6), 19=-182(LC 5), 15=-85(LC 7), 14=-89(LC 7), 13=-159(LC 4)
Max Grav 20=233(LC 5), 12=195(LC 4), 16=212(LC 7), 17=167(LC 10), 18=166(LC 1), 19=139(LC 4), 15=167(LC 11), 14=166(LC 1), 13=117(LC 5)

FORCES. (lb) - Maximum Compression/Maximum Tension
TOP CHORD 2-20=-155/123, 1-2=0/49, 2-3=-182/145, 3-4=-99/106, 4-5=-41/121, 5-6=-46/195, 6-7=-46/195, 7-8=-40/114, 8-9=-75/82, 9-10=-151/114, 10-11=0/49, 10-12=-127/96
BOT CHORD 19-20=-55/126, 18-19=-55/126, 17-18=-55/126, 16-17=-55/126, 15-16=-55/126, 14-15=-55/126, 13-14=-55/126, 12-13=-55/126
WEBS 6-16=-225/0, 5-17=-128/97, 4-18=-124/105, 3-19=-80/109, 7-15=-128/96, 8-14=-124/105, 9-13=-69/99

NOTES-
1) Unbalanced roof live loads have been considered for this design.
2) Wind: ASCE 7-05; 90mph; TCDL=6.0psf; BCDL=3.0psf; h=25ft; Cat. II; Exp B; enclosed; MWFRS (low-rise) gable end zone and C-C Exterior(2) zone; cantilever left and right exposed ; end vertical left and right exposed;C-C for members and forces & MWFRS for reactions shown; Lumber DOL=1.15 plate grip DOL=1.15
3) Truss designed for wind loads in the plane of the truss only. For studs exposed to wind (normal to the face), see Standard Industry Gable End Details as applicable, or consult qualified building designer as per ANSI/TPI 1.
4) All plates are 2x4 MT20 unless otherwise indicated.
5) Gable requires continuous bottom chord bearing.
6) Truss to be fully sheathed from one face or securely braced against lateral movement (i.e. diagonal web).
7) Gable studs spaced at 2-0-0 oc.
8) This truss has been designed for a 20.0 psf bottom chord live load nonconcurrent with any other live loads.
9) * This truss has been designed for a live load of 20.0psf on the bottom chord in all areas where a rectangle 3-6-0 tall by 2-0-0 wide will fit between the bottom chord and any other members.
10) Provide mechanical connection (by others) of truss to bearing plate capable of withstanding 170 lb uplift at joint 20, 132 lb uplift at joint 12, 86 lb uplift at joint 17, 88 lb uplift at joint 18, 182 lb uplift at joint 19, 85 lb uplift at joint 15, 89 lb uplift at joint 14 and 159 lb uplift at joint 13.
11) "Semi-rigid pitchbreaks with fixed heels" Member end fixity model was used in the analysis and design of this truss.

COMMONWEALTH OF VIRGINIA
FRANK R. LASSITER
Lic. No. 034728
PROFESSIONAL ENGINEER

March 20,2015

WARNING - Verify design parameters and READ NOTES ON THIS AND INCLUDED MITEK REFERENCE PAGE MII-7473 rev. 1/29/2014 BEFORE USE
Design valid for use only with MiTek connectors. This design is based only upon parameters shown, and is for an individual building component. Applicability of design parameters and proper incorporation of component is responsibility of building designer - not truss designer. Bracing shown is for lateral support of individual web members only. Additional temporary bracing to insure stability during construction is the responsibility of the erector. Additional permanent bracing of the overall structure is the responsibility of the building designer. For general guidance regarding fabrication, quality control, storage, delivery, erection and bracing, consult ANSI/TPI1 Quality Criteria, DSB-89 and BCSI Building Component Safety Information, available from Truss Plate Institute, 281 N. Lee Street, Suite 312, Alexandria, VA 22314.
If Southern Pine (SP) lumber is specified, the design values are those effective 06/01/2013 by ALSC

ENGINEERING BY TRENCO A MiTek Affiliate
818 Soundside Road

Job	Truss	Truss Type	Qty	Ply	SAVANNAH W/ ROG & PART ATTIC	E8659960
25917	T-3GT	COMMON GIRDER	1	2	Job Reference (optional)	

Structural Technologies, Doswell, VA 23047

7.610 s Jan 16 2015 MiTek Industries, Inc. Fri Mar 20 15:15:16 2015 Page 1

ID:hNjBGyXDZHd0w6QHrgvER7yQsfP-8rTLBkcyVEI?bycroD9MEXjcoy0udh2ZVT5sBvzZ0Sv

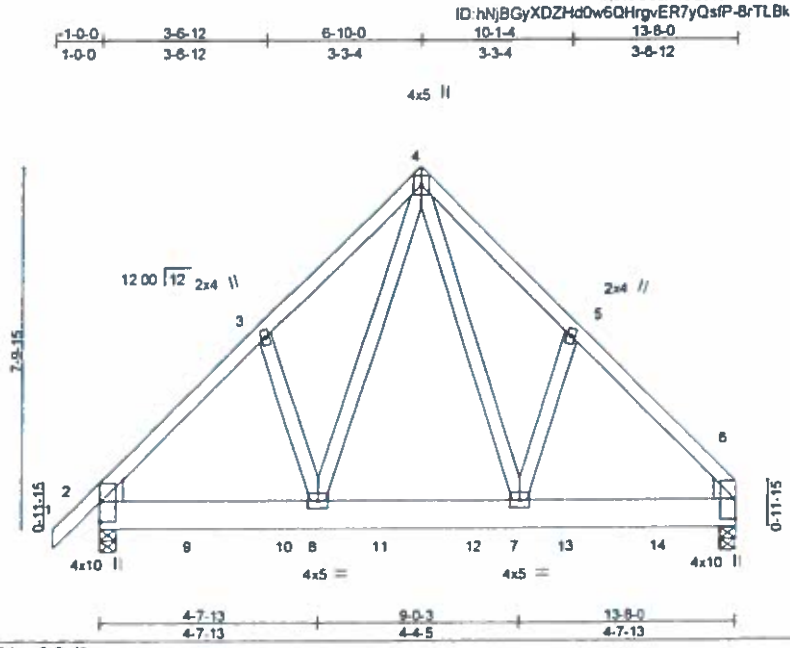

Plate Offsets (X,Y)— [2:Edge,0-0-4], [6:Edge,0-0-4]

LOADING (psf)		SPACING- 2-0-0		CSI.		DEFL.	in	(loc)	l/defl	L/d	PLATES	GRIP
TCLL	20.0	Plate Grip DOL	1.15	TC	0.26	Vert(LL)	-0.02	7-8	>999	240	MT20	244/190
TCDL	10.0	Lumber DOL	1.15	BC	0.26	Vert(TL)	-0.04	7-8	>999	180		
BCLL	0.0 *	Rep Stress Incr	NO	WB	0.22	Horz(TL)	0.01	6	n/a	n/a		
BCDL	10.0	Code IRC2009/TPI2007		(Matrix)							Weight: 217 lb	FT = 5%

LUMBER-
TOP CHORD 2x4 SP No.2
BOT CHORD 2x8 SP No.2
WEBS 2x4 SP No.3
WEDGE
Left: 2x6 SP No.2, Right: 2x6 SP No.2

BRACING-
TOP CHORD Structural wood sheathing directly applied or 6-0-0 oc purlins
BOT CHORD Rigid ceiling directly applied or 10-0-0 oc bracing

REACTIONS. (lb/size) 2=1710/0-4-0 (min. 0-1-8), 6=1691/0-4-0 (min. 0-1-8)
Max Horz 2=178(LC 4)
Max Uplift 2=-170(LC 5), 6=-140(LC 5)

FORCES. (lb) - Maximum Compression/Maximum Tension
TOP CHORD 1-2=0/28, 2-3=-1750/178, 3-4=-1596/250, 4-5=-1609/256, 5-6=-1763/178
BOT CHORD 2-8=-129/1077, 7-8=-66/788, 6-7=-61/1087
WEBS 4-7=-188/1051, 5-7=-61/177, 4-8=-178/1021, 3-8=-61/177

NOTES-
1) 2-ply truss to be connected together with 12d (0.131"x3.25") nails as follows:
Top chords connected as follows: 2x4 - 1 row at 0-9-0 oc clinched.
Bottom chords connected as follows: 2x8 - 2 rows staggered at 0-9-0 oc clinched.
Webs connected as follows: 2x4 - 1 row at 0-9-0 oc clinched.
2) All loads are considered equally applied to all plies, except if noted as front (F) or back (B) face in the LOAD CASE(S) section. Ply to ply connections have been provided to distribute only loads noted as (F) or (B), unless otherwise indicated.
3) Unbalanced roof live loads have been considered for this design.
4) Wind: ASCE 7-05; 90mph; TCDL=6.0psf; BCDL=3.0psf; h=25ft; Cat. II; Exp B; enclosed; MWFRS (low-rise); gable end zone; cantilever left and right exposed ; end vertical left and right exposed; Lumber DOL=1.15 plate grip DOL=1.15
5) This truss has been designed for a 20.0 psf bottom chord live load nonconcurrent with any other live loads.
6) This truss has been designed for a live load of 20.0psf on the bottom chord in all areas where a rectangle 3-6-0 tall by 2-0-0 wide will fit between the bottom chord and any other members.
7) Provide mechanical connection (by others) of truss to bearing plate capable of withstanding 170 lb uplift at joint 2 and 140 lb uplift at joint 6.
8) "Semi-rigid pitchbreaks with fixed heels" Member end fixity model was used in the analysis and design of this truss.
9) Hanger(s) or other connection device(s) shall be provided sufficient to support concentrated load(s) 377 lb down and 27 lb up at 2-0-0, 377 lb down and 27 lb up at 4-0-0, 377 lb down and 27 lb up at 6-0-0, 377 lb down and 27 lb up at 8-0-0, and 377 lb down and 27 lb up at 10-0-0, and 377 lb down and 27 lb up at 12-0-0 on bottom chord. The design/selection of such connection device(s) is the responsibility of others.

LOAD CASE(S) Standard
1) Dead + Roof Live (balanced) + Uninhab. Attic Storage: Lumber Increase=1.15, Plate Increase=1.15

COMMONWEALTH OF VIRGINIA
FRANK R. LASSITER
Lic. No. 034728
PROFESSIONAL ENGINEER

March 20,2015

Continued on page 2

WARNING - Verify design parameters and READ NOTES ON THIS AND INCLUDED MITEK REFERENCE PAGE MII-7473 rev. 1/29/2014 BEFORE USE.
Design valid for use only with MiTek connectors. This design is based only upon parameters shown, and is for an individual building component. Applicability of design parameters and proper incorporation of component is responsibility of building designer - not truss designer. Bracing shown is for lateral support of individual web members only. Additional temporary bracing to insure stability during construction is the responsibility of the erector. Additional permanent bracing of the overall structure is the responsibility of the building designer. For general guidance regarding fabrication, quality control, storage, delivery, erection and bracing, consult ANSI/TPI1 Quality Criteria, DSB-89 and BCSI Building Component Safety Information, available from Truss Plate Institute, 281 N. Lee Street, Suite 312, Alexandria, VA 22314.
Southern Pine (SP) lumber is specified, the design values are those specified by the SPIB rules.

ENGINEERING BY TRENCO A MiTek Affiliate
818 Soundside Road

LOAD CASE(S) Standard

Uniform Loads (plf)

Vert: 1-4=-60, 4-6=-60, 2-6=-20

Concentrated Loads (lb)

Vert: 9=-377(B) 10=-377(B) 11=-377(B) 12=-377(B) 13=-377(B) 14=-377(B)

WARNING - Verify design parameters and READ NOTES ON THIS AND INCLUDED MITEK REFERENCE PAGE MII-7473 rev. 1/29/2014 BEFORE USE

Design valid for use only with MiTek connectors. This design is based only upon parameters shown, and is for an individual building component. Applicability of design parameters and proper incorporation of component is responsibility of building designer - not truss designer. Bracing shown is for lateral support of individual web members only. Additional temporary bracing to insure stability during construction is the responsibility of the erector. Additional permanent bracing of the overall structure is the responsibility of the building designer. For general guidance regarding fabrication, quality control, storage, delivery, erection and bracing, consult ANSI/TPI1 Quality Criteria, DSB-89 and BCSI Building Component Safety Information, available from Truss Plate Institute, 281 N. Lee Street, Suite 312, Alexandria, VA 22314. If Southern Pine (SP) lumber is specified, the design values are those effective 06/01/2013 by ALSC

ENGINEERING BY TRENCO A MiTek Affiliate

818 Soundside Road

Job	Truss	Truss Type	Qty	Ply	SAVANNAH W/ ROG & PART ATTIC
25917	V1G	GABLE	1	1	E6659961

Job Reference (optional)

Structural Technologies, Doswell, VA 23047

7.610 s Jan 16 2015 MiTek Industries, Inc. Fri Mar 20 15:15:17 2015 Page 1

ID:hNjBGyXDZHd0w6QHrgvER7yQsfP-d11jO4daGYQsD6A2LwgbmkFoVMQVMBQik7rPkLzZ0Su

6-4-7

6-4-7

Scale = 1:22.9

Truss designed for wind loads in the plane of the truss only
For studs exposed to wind (normal to the face), see
Standard Industry Gable End Details as applicable, or
consult qualified building designer as per ANSI/TPI 1.

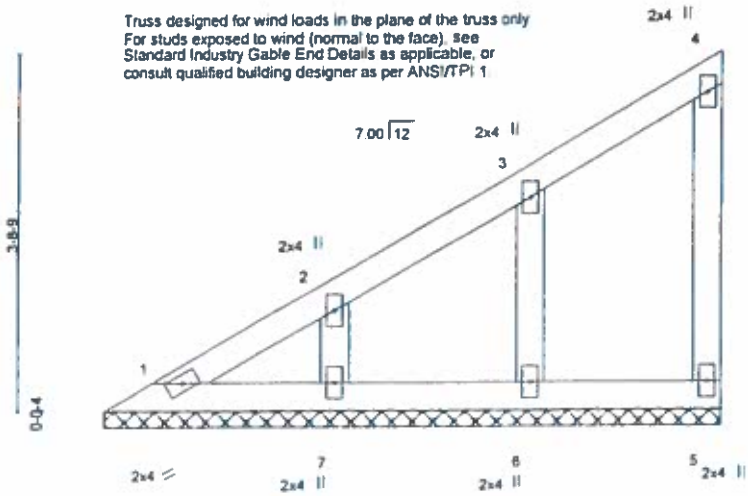

LOADING (psf)		SPACING-	2-0-0	CSI.		DEFL.	in	(loc)	l/defl	L/d	PLATES	GRIP
TCLL	20.0	Plate Grip DOL	1.15	TC	0.20	Vert(LL)	n/a	-	n/a	999	MT20	244/190
TCDL	10.0	Lumber DOL	1.15	BC	0.04	Vert(TL)	n/a	-	n/a	999		
BCLL	0.0 *	Rep Stress Incr	YES	WB	0.02	Horz(TL)	0.00	5	n/a	n/a		
BCDL	10.0	Code IRC2009/TPI2007		(Matrix)							Weight: 28 lb	FT = 5%

LUMBER-
TOP CHORD 2x4 SP No.2
BOT CHORD 2x4 SP No.2
WEBS 2x4 SP No.3
OTHERS 2x4 SP No.2

BRACING-
TOP CHORD Structural wood sheathing directly applied or 6-0-0 oc purlins, except end verticals.
BOT CHORD Rigid ceiling directly applied or 10-0-0 oc bracing.

MiTek recommends that Stabilizers and required cross bracing be installed during truss erection, in accordance with Stabilizer Installation guide.

REACTIONS. (lb/size) 1=57/6-4-7, (min. 0-1-8), 5=59/6-4-7, (min. 0-1-8), 6=170/6-4-7, (min. 0-1-8), 7=169/6-4-7, (min. 0-1-8)
Max Horz 1=100(LC 5)
Max Uplift 1=-8(LC 4), 5=-16(LC 5), 6=-49(LC 6), 7=-50(LC 6)
Max Grav 1=57(LC 2), 5=59(LC 1), 6=170(LC 2), 7=169(LC 1)

FORCES. (lb) - Maximum Compression/Maximum Tension
TOP CHORD 1-2=-86/52, 2-3=-64/48, 3-4=-40/46, 4-5=-44/21
BOT CHORD 1-7=-21/51, 6-7=-21/51, 5-6=-21/51
WEBS 3-6=-127/69, 2-7=-127/70

NOTES-
Wind: ASCE 7-05; 90mph; TCDL=6.0psf; BCDL=3.0psf; h=25ft; Cat. II; Exp B; enclosed; MWFRS (low-rise); gable end zone and C-C Exterior(2) zone; cantilever left and right exposed ; end vertical left and right exposed;C-C for members and forces & MWFRS for reactions shown; Lumber DOL=1.15 plate grip DOL=1.15
Gable requires continuous bottom chord bearing.
This truss has been designed for a 20.0 psf bottom chord live load nonconcurrent with any other live loads.
* This truss has been designed for a live load of 20.0psf on the bottom chord in all areas where a rectangle 3-6-0 tall by 2-0-0 wide will fit between the bottom chord and any other members.
Provide mechanical connection (by others) of truss to bearing plate capable of withstanding 8 lb uplift at joint 1, 16 lb uplift at joint 5, 49 lb uplift at joint 6 and 50 lb uplift at joint 7.
"Semi-rigid pitchbreaks with fixed heels" Member end fixity model was used in the analysis and design of this truss.

COMMONWEALTH OF VIRGINIA
FRANK R. LASSITER
Lic. No. 034728
PROFESSIONAL ENGINEER

March 20,2015

WARNING - Verify design parameters and READ NOTES ON THIS AND INCLUDED MITEK REFERENCE PAGE MII-7473 rev. 1/29/2014 BEFORE USE.
Design valid for use only with MiTek connectors. This design is based only upon parameters shown, and is for an individual building component. Applicability of design parameters and proper incorporation of component is responsibility of building designer - not truss designer. Bracing shown is for lateral support of individual web members only. Additional temporary bracing to insure stability during construction is the responsibility of the erector. Additional permanent bracing of the overall structure is the responsibility of the building designer. For general guidance regarding fabrication, quality control, storage, delivery, erection and bracing, consult ANSI/TPI1 Quality Criteria, DSB-89 and BCSI Building Component Safety Information, available from Truss Plate Institute, 281 N. Lee Street, Suite 312, Alexandria, VA 22314.

ENGINEERING BY TRENCO A MiTek Affiliate 818 Soundside Road

Job	Truss	Truss Type	Qty	Ply	SAVANNAH W/ ROG & PART ATTIC
25917	V2	Valley	1	1	E8659962

Structural Technologies, Doswell, VA 23047

Job Reference (optional)

7.610 s Jan 16 2015 MiTek Industries, Inc. Fri Mar 20 15:15:17 2015 Page 1

ID:hNjBGyXDZHd0w6QHrgvER7yQsfP-d11jO4daGYQsD6A2LwgbmkFq_MPhMBhik7rPkLzZ0Su

3-1-7

3-1-7

Scale = 1:12.1

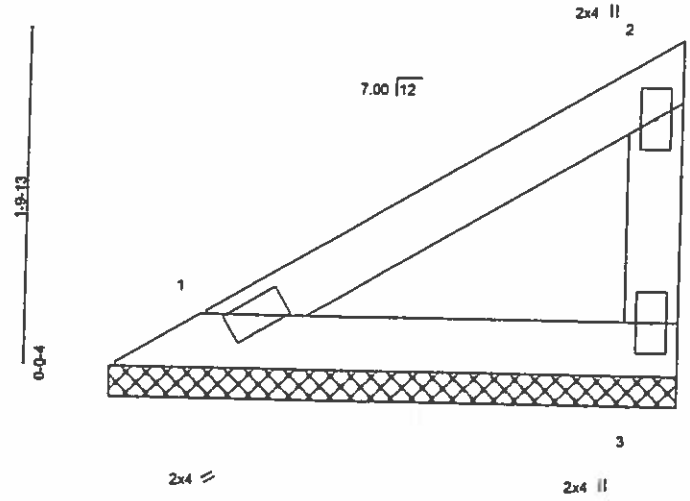

LOADING (psf)		SPACING-	2-0-0	CSI.		DEFL.	in	(loc)	l/defl	L/d	PLATES	GRIP
TCLL	20.0	Plate Grip DOL	1.15	TC	0.10	Vert(LL)	n/a	-	n/a	999	MT20	244/190
TCDL	10.0	Lumber DOL	1.15	BC	0.10	Vert(TL)	n/a	-	n/a	999		
BCLL	0.0 *	Rep Stress Incr	YES	WB	0.00	Horz(TL)	0.00	3	n/a	n/a		
BCDL	10.0	Code IRC2009/TPI2007		(Matrix)							Weight: 11 lb	FT = 5%

LUMBER-
TOP CHORD 2x4 SP No.2
BOT CHORD 2x4 SP No.2
WEBS 2x4 SP No.3

BRACING-
TOP CHORD Structural wood sheathing directly applied or 3-1-7 oc purlins, except end verticals.
BOT CHORD Rigid ceiling directly applied or 10-0-0 oc bracing.

MiTek recommends that Stabilizers and required cross bracing be installed during truss erection, in accordance with Stabilizer Installation guide.

REACTIONS. (lb/size) 1=97/3-1-7 (min. 0-1-8), 3=97/3-1-7 (min. 0-1-8)
Max Horz 1=43(LC 5)
Max Uplift 1=-9(LC 6), 3=-22(LC 6)

FORCES. (lb) - Maximum Compression/Maximum Tension
TOP CHORD 1-2=-31/29, 2-3=-73/29
BOT CHORD 1-3=-9/22

NOTES-
1) Wind: ASCE 7-05, 90mph, TCDL=6.0psf; BCDL=3.0psf; h=25ft; Cat. II; Exp B; enclosed; MWFRS (low-rise) gable end zone and C-C Exterior(2) zone; cantilever left and right exposed ; end vertical left and right exposed;C-C for members and forces & MWFRS for reactions shown; Lumber DOL=1.15 plate grip DOL=1.15
2) Gable requires continuous bottom chord bearing.
3) This truss has been designed for a 20.0 psf bottom chord live load nonconcurrent with any other live loads.
4) * This truss has been designed for a live load of 20.0psf on the bottom chord in all areas where a rectangle 3-6-0 tall by 2-0-0 wide will fit between the bottom chord and any other members.
5) Provide mechanical connection (by others) of truss to bearing plate capable of withstanding 9 lb uplift at joint 1 and 22 lb uplift at joint 3.
6) "Semi-rigid pitchbreaks with fixed heels" Member end fixity model was used in the analysis and design of this truss.

COMMONWEALTH OF VIRGINIA
FRANK R. LASSITER
Lic. No. 034728
PROFESSIONAL ENGINEER

March 20,2015

WARNING - Verify design parameters and READ NOTES ON THIS AND INCLUDED MITEK REFERENCE PAGE MII-7473 rev. 1/29/2014 BEFORE USE
Design valid for use only with MiTek connectors. This design is based only upon parameters shown, and is for an individual building component. Applicability of design parameters and proper incorporation of component is responsibility of building designer - not truss designer. Bracing shown is for lateral support of individual web members only. Additional temporary bracing to insure stability during construction is the responsibility of the erector. Additional permanent bracing of the overall structure is the responsibility of the building designer. For general guidance regarding fabrication, quality control, storage, delivery, erection and bracing, consult AHSI/TPI1 Quality Criteria, DSB-89 and BCSI Building Component Safety Information available from Truss Plate Institute, 281 N. Lee Street, Suite 312, Alexandria, VA 22314.
If Southern Pine (SP) lumber is specified, the design values are those effective 06/01/2013 by ALSC

ENGINEERING BY TRENCO A MiTek Affiliate
818 Soundside Road
Edenton, NC 27932

Job	Truss	Truss Type	Qty	Ply	SAVANNAH W/ ROG & PART ATTIC
15917	V3A	Valley	1	1	E6659963

Job Reference (optional)

Structural Technologies, Doswell, VA 23047

7.610 s Jan 15 2015 MiTek Industries, Inc. Fri Mar 20 15:15:17 2015 Page 1

ID:hNj8GyXDZHd0w6QHrgvER7yQsfP-d11jO4daGYQsD6A2LwgbmkFpqMOHMA2ik7rPkLzZ0Su

6-10-3 | 13-8-6
6-10-3 | 6-10-3

Scale = 1:43.6

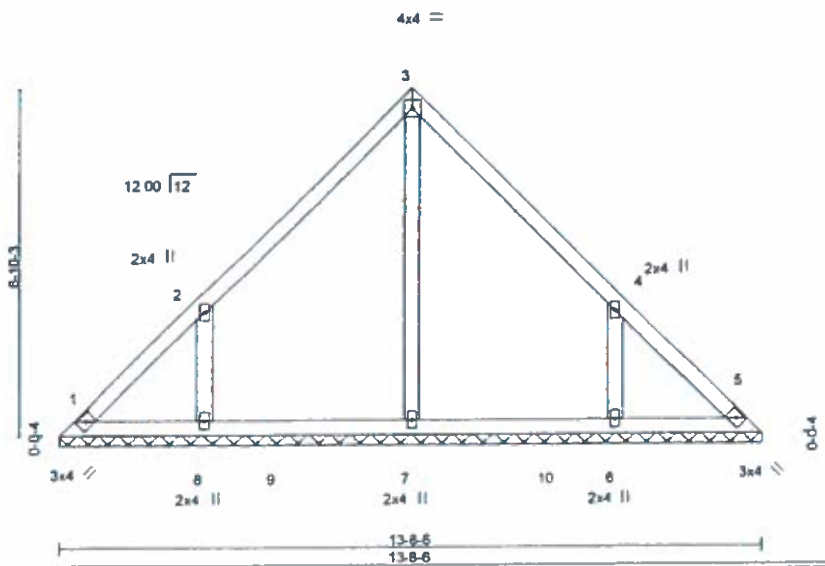

LOADING (psf)		SPACING-	2-0-0	CSI.		DEFL.	in	(loc)	l/defl	L/d	PLATES	GRIP
TCLL	20.0	Plate Grip DOL	1.15	TC	0.18	Vert(LL)	n/a	-	n/a	999	MT20	244/190
TCDL	10.0	Lumber DOL	1.15	BC	0.19	Vert(TL)	n/a	-	n/a	999		
BCLL	0.0 *	Rep Stress Incr	YES	WB	0.11	Horz(TL)	0.00	5	n/a	n/a		
BCDL	10.0	Code IRC2009/TPI2007		(Matrix)							Weight: 64 lb	FT = 5%

LUMBER-
TOP CHORD 2x4 SP No.2
BOT CHORD 2x4 SP No.2
WEBS 2x4 SP No.2

BRACING-
TOP CHORD Structural wood sheathing directly applied or 6-0-0 oc purlins
BOT CHORD Rigid ceiling directly applied or 10-0-0 oc bracing

MiTek recommends that Stabilizers and required cross bracing be installed during truss erection, in accordance with Stabilizer Installation guide.

REACTIONS. (lb/size) 1=94/13-8-6 (min. 0-1-8), 5=94/13-8-6 (min. 0-1-8), 7=388/13-8-6 (min. 0-1-8), 8=338/13-8-6 (min. 0-1-8), 6=338/13-8-6 (min. 0-1-8)
Max Horz 1=-151(LC 4)
Max Uplift 1=-43(LC 4), 5=-17(LC 5), 8=-175(LC 6), 6=-174(LC 7)
Max Grav 1=104(LC 5), 5=94(LC 1), 7=388(LC 1), 8=345(LC 10), 6=345(LC 11)

FORCES. (lb) - Maximum Compression/Maximum Tension
TOP CHORD 1-2=-153/96, 2-3=-147/102, 3-4=-147/96, 4-5=-116/60
BOT CHORD 1-8=-32/98, 7-8=-32/98, 6-7=-32/98, 5-6=-32/98
WEBS 3-7=-145/0, 2-8=-237/193, 4-6=-237/193

NOTES-
Unbalanced roof live loads have been considered for this design.
Wind: ASCE 7-05; 90mph; TCDL=6.0psf; BCDL=3.0psf; h=25ft; Cat. II; Exp B; enclosed; MWFRS (low-rise); gable end zone and C-C Exterior(2) zone; cantilever left and right exposed ; end vertical left and right exposed;C-C for members and forces & MWFRS for reactions shown; Lumber DOL=1.15 plate grip DOL=1.15
Gable requires continuous bottom chord bearing.
This truss has been designed for a 20.0 psf bottom chord live load nonconcurrent with any other live loads.
* This truss has been designed for a live load of 20.0psf on the bottom chord in all areas where a rectangle 3-6-0 tall by 2-0-0 wide will fit between the bottom chord and any other members, with BCDL = 10.0psf.
Provide mechanical connection (by others) of truss to bearing plate capable of withstanding 43 lb uplift at joint 1, 17 lb uplift at joint 5, 175 lb uplift at joint 8 and 174 lb uplift at joint 6.
"Semi-rigid pitchbreaks with fixed heels" Member end fixity model was used in the analysis and design of this truss.

COMMONWEALTH OF VIRGINIA
FRANK R. LASSITER
Lic. No. 034728
PROFESSIONAL ENGINEER

March 20,2015

WARNING - Verify design parameters and READ NOTES ON THIS AND INCLUDED MITEK REFERENCE PAGE MII-7473 rev. 1/29/2014 BEFORE USE.
Design valid for use only with MiTek connectors. This design is based only upon parameters shown, and is for an individual building component. Applicability of design parameters and proper incorporation of component is responsibility of building designer - not truss designer. Bracing shown is for lateral support of individual web members only. Additional temporary bracing to insure stability during construction is the responsibility of the erector. Additional permanent bracing of the overall structure is the responsibility of the building designer. For general guidance regarding fabrication, quality control, storage, delivery, erection and bracing, consult ANSI/TPI1 Quality Criteria, DSB-89 and BCSI Building Component Safety Information, available from Truss Plate Institute, 583 D'Onofrio Drive, Madison, WI 53719.

ENGINEERING BY TRENCO A MiTek Affiliate

Job	Truss	Truss Type	Qty	Ply	SAVANNAH W/ ROG & PART ATTIC
25917	V3B	Valley	1	1	E8659964

Structural Technologies, Doswell, VA 23047

Job Reference (optional)

7.610 s Jan 16 2015 MiTek Industries, Inc. Fri Mar 20 15:15:18 2015 Page 1

ID:hNjBGyXDZHd0w6QHrgvER7yQsfP-5Eb5cQdC1sYjrGlEveBqJyo_OrnkbSdssynayGnzZ0St

5-8-3 | 11-4-6
5-8-3 | 5-8-3

4x4 =

Scale = 1:36.6

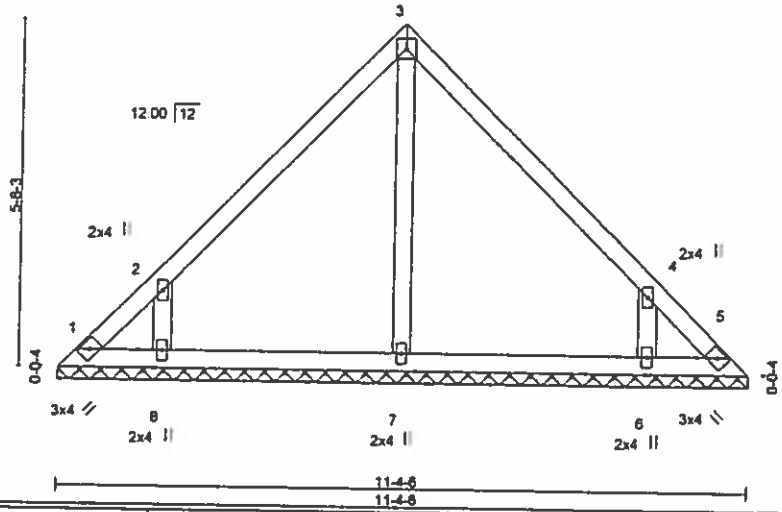

LOADING (psf)		SPACING-	2-0-0	CSI.		DEFL.	in	(loc)	l/defl	L/d	PLATES	GRIP
TCLL	20.0	Plate Grip DOL	1.15	TC	0.19	Vert(LL)	n/a	-	n/a	999	MT20	244/190
TCDL	10.0	Lumber DOL	1.15	BC	0.18	Vert(TL)	n/a	-	n/a	999		
BCLL	0.0 *	Rep Stress Incr	YES	WB	0.07	Horz(TL)	0.00	5	n/a	n/a		
BCDL	10.0	Code IRC2009/TPI2007		(Matrix)							Weight: 50 lb	FT = 5%

LUMBER-
TOP CHORD 2x4 SP No.2
BOT CHORD 2x4 SP No.2
OTHERS 2x4 SP No.2

BRACING-
TOP CHORD Structural wood sheathing directly applied or 6-0-0 oc purlins.
BOT CHORD Rigid ceiling directly applied or 10-0-0 oc bracing.

MiTek recommends that Stabilizers and required cross bracing be installed during truss erection, in accordance with Stabilizer Installation guide.

REACTIONS. (lb/size) 1=23/11-4-6 (min. 0-1-8), 5=23/11-4-6 (min. 0-1-8), 7=229/11-4-6 (min. 0-1-8), 8=289/11-4-6 (min. 0-1-8), 6=289/11-4-6 (min. 0-1-8)
Max Horz 1=-124(LC 4)
Max Uplift 1=-59(LC 4), 5=-38(LC 5), 8=-169(LC 6), 6=-169(LC 7)
Max Grav 1=109(LC 5), 5=89(LC 7), 7=303(LC 2), 8=299(LC 10), 6=299(LC 11)

FORCES. (lb) - Maximum Compression/Maximum Tension
TOP CHORD 1-2=-150/90, 2-3=-148/84, 3-4=-148/79, 4-5=-123/60
BOT CHORD 1-8=-27/75, 7-8=-27/75, 6-7=-27/75, 5-6=-27/75
WEBS 3-7=-142/0, 2-8=-244/199, 4-6=-244/199

NOTES-
1) Unbalanced roof live loads have been considered for this design.
2) Wind: ASCE 7-05; 90mph; TCDL=6.0psf; BCDL=3.0psf; h=25ft; Cat. II; Exp B; enclosed; MWFRS (low-rise) gable end zone and C-C Exterior(2) zone; cantilever left and right exposed ; end vertical left and right exposed;C-C for members and forces & MWFRS for reactions shown; Lumber DOL=1.15 plate grip DOL=1.15
3) Gable requires continuous bottom chord bearing.
4) This truss has been designed for a 20.0 psf bottom chord live load nonconcurrent with any other live loads.
5) * This truss has been designed for a live load of 20.0psf on the bottom chord in all areas where a rectangle 3-6-0 tall by 2-0-0 wide will fit between the bottom chord and any other members.
6) Provide mechanical connection (by others) of truss to bearing plate capable of withstanding 59 lb uplift at joint 1, 38 lb uplift at joint 5, 169 lb uplift at joint 8 and 169 lb uplift at joint 6.
7) "Semi-rigid pitchbreaks with fixed heels" Member end fixity model was used in the analysis and design of this truss.

COMMONWEALTH OF VIRGINIA
FRANK R. LASSITER
Lic. No. 034728
PROFESSIONAL ENGINEER

March 20,2015

WARNING - Verify design parameters and READ NOTES ON THIS AND INCLUDED MITEK REFERENCE PAGE MII-7473 rev. 1/29/2014 BEFORE USE
Design valid for use only with MiTek connectors. This design is based only upon parameters shown, and is for an individual building component. Applicability of design parameters and proper incorporation of component is responsibility of building designer - not truss designer. Bracing shown is for lateral support of individual web members only. Additional temporary bracing to insure stability during construction is the responsibility of the erector. Additional permanent bracing of the overall structure is the responsibility of the building designer. For general guidance regarding fabrication, quality control, storage, delivery, erection and bracing, consult ANSI/TPI1 Quality Criteria, DSB-89 and BCSI Building Component Safety Information available from Truss Plate Institute, 281 N. Lee Street, Suite 312, Alexandria, VA 22314.

ENGINEERING BY TRENCO A MiTek Affiliate
818 Soundside Road

Job	Truss	Truss Type	Qty	Ply	SAVANNAH W ROG & PART ATTIC	
5917	V3C	Valley	1	1	Job Reference (optional)	E8659965

Structural Technologies, Doswell, VA 23047

7.610 s Jan 16 2015 MiTek Industries, Inc. Fri Mar 20 15:15:18 2015 Page 1

ID:hNjBGyXDZHd0w6QHrgvER7yQsfP-5Eb5cQdC1sYjrGlEveBqJyoxxmiL5eAsynayGnzZ0St

4-6-3 | 9-0-6
4-6-3 | 4-6-3

Scale = 1:30.3

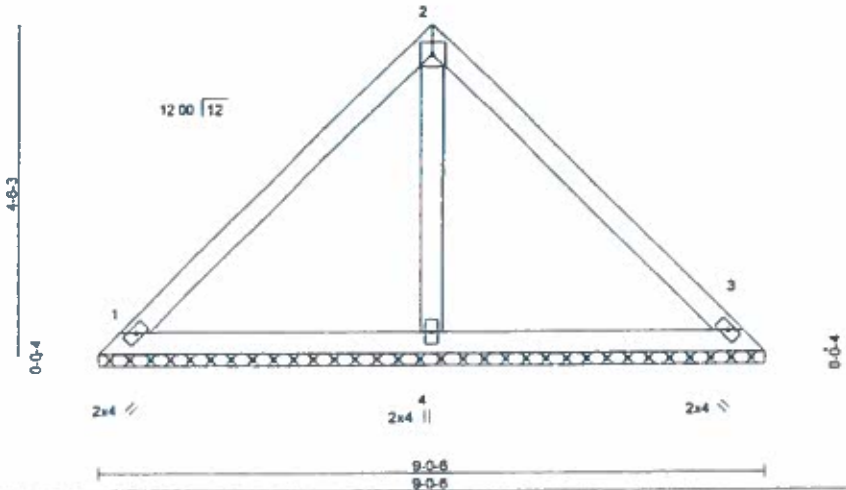

LOADING (psf)		SPACING-	2-0-0	CSI.		DEFL.	in	(loc)	l/defl	L/d	PLATES	GRIP
TCLL	20.0	Plate Grip DOL	1.15	TC	0.35	Vert(LL)	n/a	-	n/a	999	MT20	244/190
TCDL	10.0	Lumber DOL	1.15	BC	0.26	Vert(TL)	n/a	-	n/a	999		
BCLL	0.0 *	Rep Stress Incr	YES	WB	0.05	Horz(TL)	0.00	3	n/a	n/a		
BCDL	10.0	Code IRC2009/TPI2007		(Matrix)							Weight: 37 lb	FT = 5%

LUMBER-
TOP CHORD 2x4 SP No.2
BOT CHORD 2x4 SP No.2
WEBS 2x4 SP No.2

BRACING-
TOP CHORD Structural wood sheathing directly applied or 6-0-0 oc purlins.
BOT CHORD Rigid ceiling directly applied or 10-0-0 oc bracing.

MiTek recommends that Stabilizers and required cross bracing be installed during truss erection, in accordance with Stabilizer Installation guide.

REACTIONS. (lb/size) 1=199/9-0-6 (min. 0-1-8), 3=199/9-0-6 (min. 0-1-8), 4=268/9-0-6 (min. 0-1-8)
Max Horz 1=-97(LC 4)
Max Uplift 1=-43(LC 7), 3=-43(LC 7)
Max Grav 1=199(LC 1), 3=199(LC 1), 4=367(LC 2)

FORCES. (lb) - Maximum Compression/Maximum Tension
TOP CHORD 1-2=-131/62, 2-3=-131/51
BOT CHORD 1-4=-22/58, 3-4=-22/58
WEBS 2-4=-164/32

NOTES-
Unbalanced roof live loads have been considered for this design.
Wind: ASCE 7-05; 90mph; TCDL=6.0psf; BCDL=3.0psf; h=25ft; Cat. II; Exp B; enclosed; MWFRS (low-rise) gable end zone and C-C Exterior(2) zone; cantilever left and right exposed ; end vertical left and right exposed;C-C for members and forces & MWFRS for reactions shown; Lumber DOL=1.15 plate grip DOL=1.15
Gable requires continuous bottom chord bearing.
This truss has been designed for a 20.0 psf bottom chord live load nonconcurrent with any other live loads.
* This truss has been designed for a live load of 20.0psf on the bottom chord in all areas where a rectangle 3-6-0 tall by 2-0-0 wide will fit between the bottom chord and any other members.
Provide mechanical connection (by others) of truss to bearing plate capable of withstanding 43 lb uplift at joint 1 and 43 lb uplift at joint 3.
"Semi-rigid pitchbreaks with fixed heels" Member end fixity model was used in the analysis and design of this truss.

COMMONWEALTH OF VIRGINIA
FRANK R. LASSITER
Lic. No. 034728
PROFESSIONAL ENGINEER

March 20,2015

WARNING - Verify design parameters and READ NOTES ON THIS AND INCLUDED MITEK REFERENCE PAGE MII-7473 rev. 1/29/2014 BEFORE USE
Design valid for use only with MiTek connectors. This design is based only upon parameters shown, and is for an individual building component. Applicability of design parameters and proper incorporation of component is responsibility of building designer - not truss designer. Bracing shown is for lateral support of individual web members only. Additional temporary bracing to insure stability during construction is the responsibility of the erector. Additional permanent bracing of the overall structure is the responsibility of the building designer. For general guidance regarding fabrication, quality control, storage, delivery, erection and bracing, consult ANSI/TPI1 Quality Criteria, DSB-89 and BCSI Building Component

ENGINEERING BY TRENCO A MiTek Affiliate

Job	Truss	Truss Type	Qty	Ply	SAVANNAH W/ ROG & PART ATTIC
25917	V3D	Valley	1	1	E8659966

Structural Technologies, Doswell, VA 23047

Job Reference (optional)

7.610 s Jan 16 2015 MiTek Industries, Inc. Fri Mar 20 15:15:19 2015 Page 1

ID:hNjBGyXDZHdOw6QHrgvER7yQsfP-ZQ9Tpmero9gaSQKQTLj3s9L8TA3Yq5I?BRKWoEzZ0Ss

3-4-3 | 6-8-6

3-4-3 | 3-4-3

4x4 =

Scale = 1:22.8

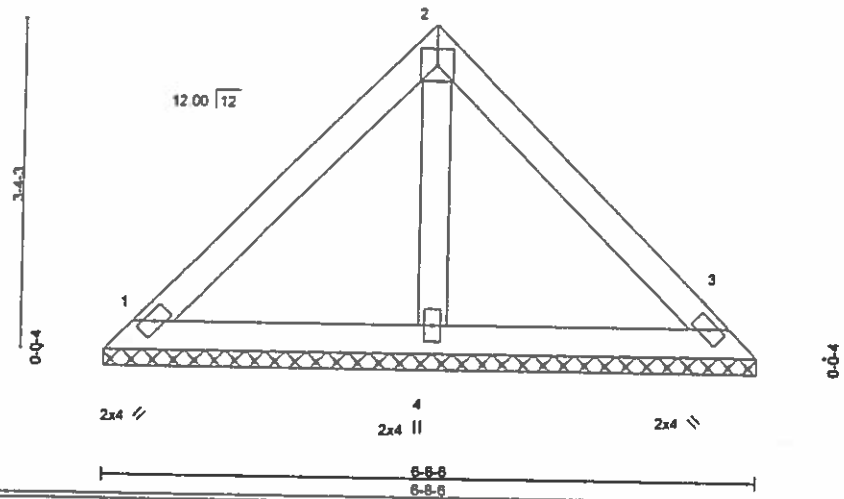

LOADING (psf)		SPACING-	2-0-0	CSI.		DEFL.	in	(loc)	l/defl	L/d	PLATES	GRIP
TCLL	20.0	Plate Grip DOL	1.15	TC	0.17	Vert(LL)	n/a	-	n/a	999	MT20	244/190
TCDL	10.0	Lumber DOL	1.15	BC	0.14	Vert(TL)	n/a	-	n/a	999		
BCLL	0.0 *	Rep Stress Incr	YES	WB	0.02	Horz(TL)	0.00	3	n/a	n/a		
BCDL	10.0	Code IRC2009/TPI2007		(Matrix)							Weight: 27 lb	FT = 5%

LUMBER-
TOP CHORD 2x4 SP No.2
BOT CHORD 2x4 SP No.2
OTHERS 2x4 SP No.2

BRACING-
TOP CHORD Structural wood sheathing directly applied or 6-0-0 oc purlins.
BOT CHORD Rigid ceiling directly applied or 10-0-0 oc bracing.

MiTek recommends that Stabilizers and required cross bracing be installed during truss erection, in accordance with Stabilizer Installation guide.

REACTIONS. (lb/size) 1=143/6-8-6 (min. 0-1-8), 3=143/6-8-6 (min. 0-1-8), 4=193/6-8-6 (min. 0-1-8)
Max Horz 1=70(LC 5)
Max Uplift 1=-31(LC 7), 3=-31(LC 7)
Max Grav 1=143(LC 1), 3=143(LC 1), 4=264(LC 2)

FORCES. (lb) - Maximum Compression/Maximum Tension
TOP CHORD 1-2=-95/44, 2-3=-95/38
BOT CHORD 1-4=-16/42, 3-4=-16/42
WEBS 2-4=-118/25

NOTES-
1) Unbalanced roof live loads have been considered for this design.
2) Wind: ASCE 7-05; 90mph; TCDL=6.0psf; BCDL=3.0psf; h=25ft; Cat. II; Exp B; enclosed; MWFRS (low-rise) gable end zone and C-C Exterior(2) zone; cantilever left and right exposed ; end vertical left and right exposed;C-C for members and forces & MWFRS for reactions shown; Lumber DOL=1.15 plate grip DOL=1.15
3) Gable requires continuous bottom chord bearing.
4) This truss has been designed for a 20.0 psf bottom chord live load nonconcurrent with any other live loads.
5) * This truss has been designed for a live load of 20.0psf on the bottom chord in all areas where a rectangle 3-6-0 tall by 2-0-0 wide will fit between the bottom chord and any other members.
6) Provide mechanical connection (by others) of truss to bearing plate capable of withstanding 31 lb uplift at joint 1 and 31 lb uplift at joint 3.
7) "Semi-rigid pitchbreaks with fixed heels" Member end fixity model was used in the analysis and design of this truss.

COMMONWEALTH OF VIRGINIA
FRANK R. LASSITER
Lic. No. 034728
PROFESSIONAL ENGINEER

March 20,2015

WARNING - Verify design parameters and READ NOTES ON THIS AND INCLUDED MITEK REFERENCE PAGE MII-7473 rev. 1/29/2014 BEFORE USE.
Design valid for use only with MiTek connectors. This design is based only upon parameters shown, and is for an individual building component. Applicability of design parameters and proper incorporation of component is responsibility of building designer - not truss designer. Bracing shown is for lateral support of individual web members only. Additional temporary bracing to insure stability during construction is the responsibility of the erector. Additional permanent bracing of the overall structure is the responsibility of the building designer. For general guidance regarding fabrication, quality control, storage, delivery, erection and bracing, consult ANSI/TPI1 Quality Criteria, DSB-89 and BCSI Building Component Safety Information, available from Truss Plate Institute, 281 N. Lee Street, Suite 312, Alexandria, VA 22314.
If Southern Pine (SP) lumber is specified, the design values are those effective 06/01/2013 by AWPA.

ENGINEERING BY TRENCO A MiTek Affiliate
818 Soundside Road
Edenton, NC 27932

Job	Truss	Truss Type	Qty	Ply	SAVANNAH W/ ROG & PART ATTIC	E8659967
15917	V3E	Valley	1	1	Job Reference (optional)	

Structural Technologies, Doswell, VA 23047

7.610 s Jan 16 2015 MiTek Industries, Inc. Fri Mar 20 15:15:19 2015 Page 1

ID:hNjBGyXDZHd0w6QHrgvER7yQsfP-ZQ9Tpmero9gaSQKQTLj3s9LACA5tq527BRKWoEzZ0Ss

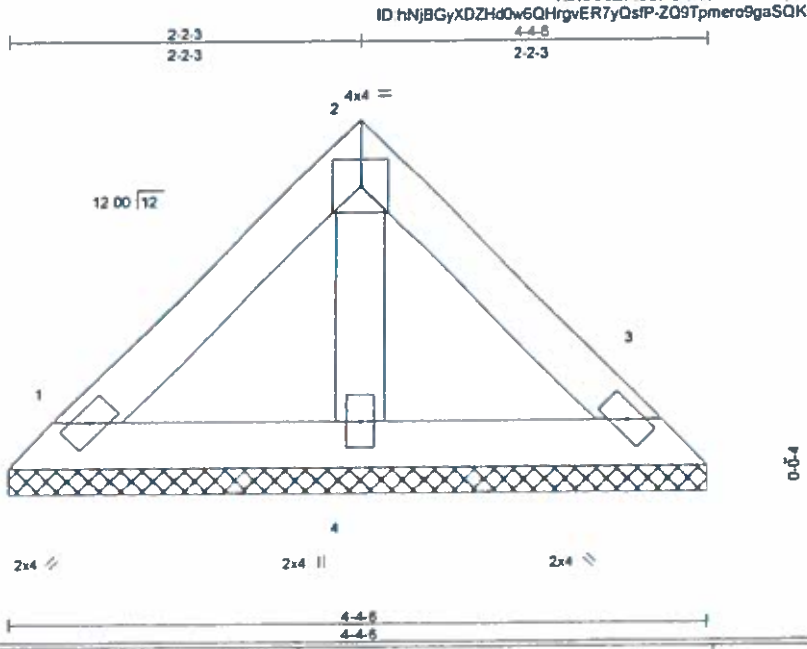

LOADING (psf)		SPACING-	2-0-0	CSI.		DEFL.	in	(loc)	l/defl	L/d	PLATES	GRIP
TCLL	20.0	Plate Grip DOL	1.15	TC	0.06	Vert(LL)	n/a	-	n/a	999	MT20	244/190
TCDL	10.0	Lumber DOL	1.15	BC	0.05	Vert(TL)	n/a	-	n/a	999		
BCLL	0.0 *	Rep Stress Incr	YES	WB	0.01	Horz(TL)	0.00	3	n/a	n/a		
BCDL	10.0	Code IRC2009/TPI2007		(Matrix)							Weight: 17 lb	FT = 5%

LUMBER-
TOP CHORD 2x4 SP No.2
BOT CHORD 2x4 SP No.2
WEBS 2x4 SP No.2

BRACING-
TOP CHORD Structural wood sheathing directly applied or 4-4-6 oc purlins
BOT CHORD Rigid ceiling directly applied or 10-0-0 oc bracing

MiTek recommends that Stabilizers and required cross bracing be installed during truss erection, in accordance with Stabilizer Installation guide

REACTIONS. (lb/size) 1=88/4-4-6 (min. 0-1-8), 3=88/4-4-6 (min. 0-1-8), 4=118/4-4-6 (min. 0-1-8)
Max Horz 1=43(LC 5)
Max Uplift 1=-19(LC 7), 3=-19(LC 7)
Max Grav 1=88(LC 1), 3=88(LC 1), 4=161(LC 2)

FORCES. (lb) - Maximum Compression/Maximum Tension
TOP CHORD 1-2=-58/27, 2-3=-58/24
BOT CHORD 1-4=-10/25, 3-4=-10/25
WEBS 2-4=-72/16

NOTES-
Unbalanced roof live loads have been considered for this design.
Wind: ASCE 7-05; 90mph; TCDL=6.0psf; BCDL=3.0psf; h=25ft; Cat. II; Exp B; enclosed; MWFRS (low-rise) gable end zone and C-C Exterior(2) zone; cantilever left and right exposed ; end vertical left and right exposed;C-C for members and forces & MWFRS for reactions shown; Lumber DOL=1.15 plate grip DOL=1.15
Gable requires continuous bottom chord bearing.
This truss has been designed for a 20.0 psf bottom chord live load nonconcurrent with any other live loads.
* This truss has been designed for a live load of 20.0psf on the bottom chord in all areas where a rectangle 3-6-0 tall by 2-0-0 wide will fit between the bottom chord and any other members.
Provide mechanical connection (by others) of truss to bearing plate capable of withstanding 19 lb uplift at joint 1 and 19 lb uplift at joint 3.
"Semi-rigid pitchbreaks with fixed heels" Member end fixity model was used in the analysis and design of this truss.

COMMONWEALTH OF VIRGINIA
FRANK R. LASSITER
Lic. No. 034728
PROFESSIONAL ENGINEER

March 20,2015

WARNING - Verify design parameters and READ NOTES ON THIS AND INCLUDED MITEK REFERENCE PAGE MII-7473 rev. 1/19/2014 BEFORE USE.
Design valid for use only with MiTek connectors. This design is based only upon parameters shown, and is for an individual building component. Applicability of design parameters and proper incorporation of component is responsibility of building designer - not truss designer. Bracing shown is for lateral support of individual web members only. Additional temporary bracing to insure stability during construction is the responsibility of the erector. Additional permanent bracing of the overall structure is the responsibility of the building designer. For general guidance regarding fabrication, quality control, storage, delivery, erection and bracing, consult ANSI/TPI1 Quality Criteria, DSB-89 and BCSI Building Component Safety Information, available from Truss Plate Institute, 583 D'Onofrio Drive, Madison, WI 53719.

ENGINEERING BY TRENCO
A MiTek Affiliate
818 Soundside Road

Job	Truss	Truss Type	Qty	Ply	SAVANNAH W/ ROG & PART ATTIC
25917	V3F	Valley	1	1	E8659968

Job Reference (optional)

Structural Technologies, Doswell, VA 23047

7.610 s Jan 16 2015 MiTek Industries, Inc. Fri Mar 20 15:15:19 2015 Page 1

ID:hNjBGyXDZHd0w6QHrgvER7yQsfP-ZQ9Tpmero9gaSQKQTLj3s9LA_A5Fq5B7BRKWoEzZ0Ss

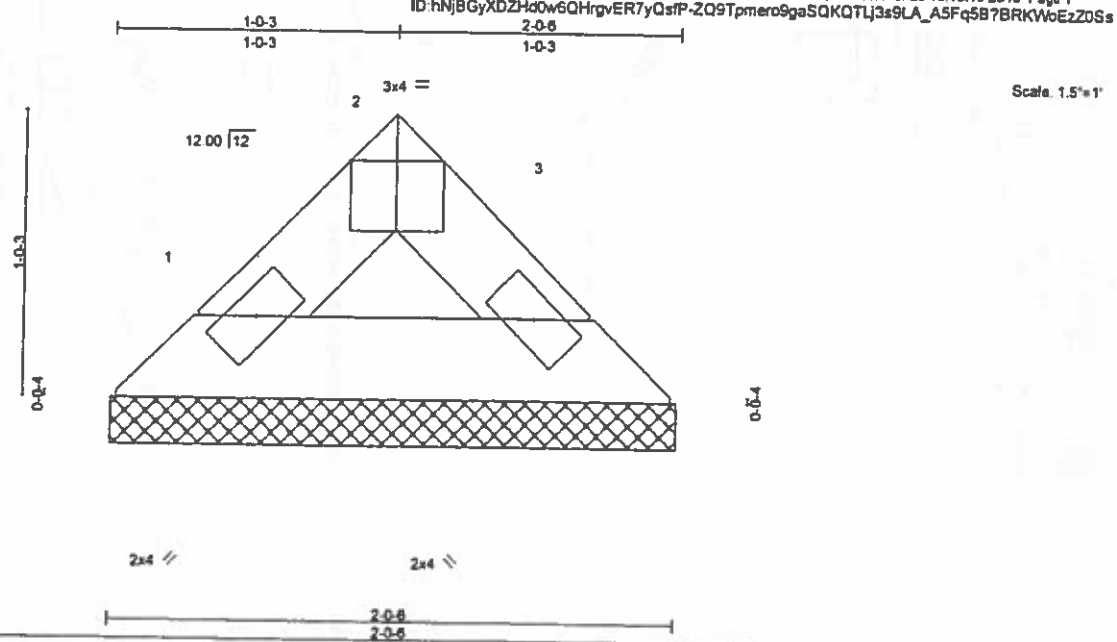

Scale: 1.5"=1'

Plate Offsets (X,Y)-- [2:0-2-0,Edge]

LOADING (psf)		SPACING-	2-0-0	CSI.		DEFL.	in	(loc)	l/defl	L/d	PLATES	GRIP
TCLL	20.0	Plate Grip DOL	1.15	TC	0.01	Vert(LL)	n/a	-	n/a	999	MT20	244/190
TCDL	10.0	Lumber DOL	1.15	BC	0.03	Vert(TL)	n/a	-	n/a	999		
BCLL	0.0 *	Rep Stress Incr	YES	WB	0.00	Horz(TL)	0.00	3	n/a	n/a		
BCDL	10.0	Code IRC2009/TPI2007		(Matrix)							Weight: 6 lb	FT = 5%

MBER-
OP CHORD 2x4 SP No.2
BOT CHORD 2x4 SP No.2

BRACING-
TOP CHORD Structural wood sheathing directly applied or 2-0-6 oc purlins.
BOT CHORD Rigid ceiling directly applied or 10-0-0 oc bracing.

MiTek recommends that Stabilizers and required cross bracing be installed during truss erection, in accordance with Stabilizer Installation guide.

REACTIONS. (lb/size) 1=53/2-0-6 (min. 0-1-8), 3=53/2-0-6 (min. 0-1-8)
Max Horz 1=15(LC 5)
Max Uplift 1=-5(LC 7), 3=-5(LC 6)

FORCES. (lb) - Maximum Compression/Maximum Tension
TOP CHORD 1-2=-39/13, 2-3=-39/13
BOT CHORD 1-3=-4/20

NOTES-
1) Unbalanced roof live loads have been considered for this design.
2) Wind: ASCE 7-05; 90mph; TCDL=6.0psf; BCDL=3.0psf; h=25ft; Cat. II; Exp B; enclosed; MWFRS (low-rise) gable end zone and C-C Exterior(2) zone; cantilever left and right exposed ; end vertical left and right exposed;C-C for members and forces & MWFRS for reactions shown; Lumber DOL=1.15 plate grip DOL=1.15
3) Gable requires continuous bottom chord bearing.
4) This truss has been designed for a 20.0 psf bottom chord live load nonconcurrent with any other live loads.
5) * This truss has been designed for a live load of 20.0psf on the bottom chord in all areas where a rectangle 3-6-0 tall by 2-0-0 wide will fit between the bottom chord and any other members.
6) Provide mechanical connection (by others) of truss to bearing plate capable of withstanding 5 lb uplift at joint 1 and 5 lb uplift at joint 3.
7) "Semi-rigid pitchbreaks with fixed heels" Member end fixity model was used in the analysis and design of this truss.

COMMONWEALTH OF VIRGINIA
FRANK R. LASSITER
Lic. No. 034728
PROFESSIONAL ENGINEER

March 20,2015

WARNING - Verify design parameters and READ NOTES ON THIS AND INCLUDED MITEK REFERENCE PAGE MTI-7473 rev. 1/29/2014 BEFORE USE.
Design valid for use only with MiTek connectors. This design is based only upon parameters shown, and is for an individual building component. Applicability of design parameters and proper incorporation of component is responsibility of building designer - not truss designer. Bracing shown is for lateral support of individual web members only. Additional temporary bracing to insure stability during construction is the responsibility of the erector. Additional permanent bracing of the overall structure is the responsibility of the building designer. For general guidance regarding fabrication, quality control, storage, delivery, erection and bracing, consult ANSI/TPI1 Quality Criteria, DSB-89 and BCSI Building Component Safety Information available from Truss Plate Institute, 281 N. Lee Street, Suite 312, Alexandria, VA 22314.
If Southern Pine (SP) lumber is specified, the design values are those effective [illegible]

ENGINEERING BY TRENCO A MiTek Affiliate
818 Soundside Road

Symbols

PLATE LOCATION AND ORIENTATION

Center plate on joint unless x, y offsets are indicated. Dimensions are in ft-in-sixteenths. Apply plates to both sides of truss and fully embed teeth.

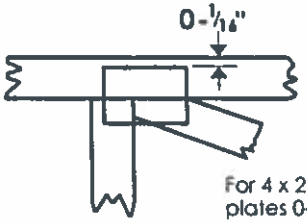

For 4 x 2 orientation, locate plates 0-1/16" from outside edge of truss.

This symbol indicates the required direction of slots in connector plates.

***Plate location details available in MiTek 20/20 software or upon request.**

PLATE SIZE

4 x 4

The first dimension is the plate width measured perpendicular to slots. Second dimension is the length parallel to slots.

LATERAL BRACING LOCATION

Indicated by symbol shown and/or by text in the bracing section of the output. Use T or I bracing if indicated.

BEARING

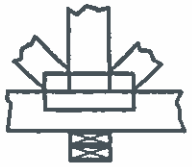

Indicates location where bearings (supports) occur. Icons vary but reaction section indicates joint number where bearings occur. Min size shown is for crushing only.

Industry Standards:

ANSI/TPI1: National Design Specification for Metal Plate Connected Wood Truss Construction.
DSB-89: Design Standard for Bracing.
BCSI: Building Component Safety Information, Guide to Good Practice for Handling, Installing & Bracing of Metal Plate Connected Wood Trusses

Numbering System

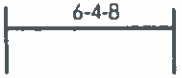

dimensions shown in ft-in-sixteenths (Drawings not to scale)

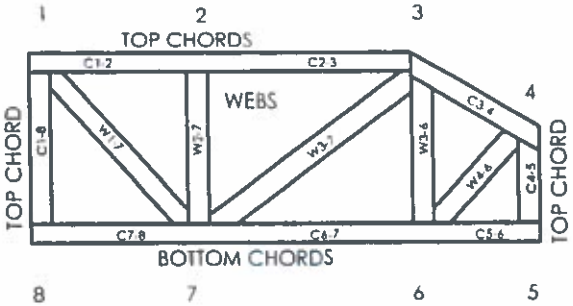

JOINTS ARE GENERALLY NUMBERED/LETTERED CLOCKWISE AROUND THE TRUSS STARTING AT THE JOINT FARTHEST TO THE LEFT.

CHORDS AND WEBS ARE IDENTIFIED BY END JOINT NUMBERS/LETTERS.

PRODUCT CODE APPROVALS

ICC-ES Reports:

ESR-1311, ESR-1352, ESR1988
ER-3907, ESR-2362, ESR-1397, ESR-3282

Southern Pine lumber designations are as follows:
SYP represents values as published by AWC in the 2005/2012 NDS
SP represents ALSC approved/new values with effective date of June 1, 2013

© 2012 MiTek® All Rights Reserved

MiTek®

MiTek Engineering Reference Sheet: MII-7473 rev. 01/20/2012

General Safety Notes

Failure to Follow Could Cause Property Damage or Personal Injury

1. Additional stability bracing for truss system, e.g. diagonal or X-bracing, is always required. See BCSI.
2. Truss bracing must be designed by an engineer. For wide truss spacing, individual lateral braces themselves may require bracing, or alternative T or I bracing should be considered.
3. Never exceed the design loading shown and never stack materials on inadequately braced trusses.
4. Provide copies of this truss design to the building designer, erection supervisor, property owner and all other interested parties.
5. Cut members to bear tightly against each other.
6. Place plates on each face of truss at each joint and embed fully. Knots and wane at joint locations are regulated by ANSI/TPI 1.
7. Design assumes trusses will be suitably protected from the environment in accord with ANSI/TPI 1.
8. Unless otherwise noted, moisture content of lumber shall not exceed 19% at time of fabrication.
9. Unless expressly noted, this design is not applicable for use with fire retardant, preservative treated, or green lumber.
10. Camber is a non-structural consideration and is the responsibility of truss fabricator. General practice is to camber for dead load deflection.
11. Plate type, size, orientation and location dimensions indicated are minimum plating requirements.
12. Lumber used shall be of the species and size, and in all respects, equal to or better than that specified.
13. Top chords must be sheathed or purlins provided at spacing indicated on design.
14. Bottom chords require lateral bracing at 10 ft. spacing, or less, if no ceiling is installed, unless otherwise noted.
15. Connections not shown are the responsibility of others.
16. Do not cut or alter truss member or plate without prior approval of an engineer.
17. Install and load vertically unless indicated otherwise.
18. Use of green or treated lumber may pose unacceptable environmental, health or performance risks. Consult with project engineer before use.
19. Review all portions of this design (front, back, words and pictures) before use. Reviewing pictures alone is not sufficient.
20. Design assumes manufacture in accordance with ANSI/TPI 1 Quality Criteria.

2012.2 Allowable Stress Design

NOTE:
1. THIS COMPONENT IS DESIGNED TO SUPPORT ONLY THE VERTICAL LOADS SHOWN VERIFICATION OF LOADING, DEFLECTION LIMITATIONS, FRAMING METHODS, WIND AND SEISMIC BRACING, AND OTHER LATERAL BRACING THAT IS ALWAYS REQUIRED IS THE RESPONSIBILITY OF THE PROJECT ENGINEER OR ARCHITECT.
2. PROVIDE RESTRAINT AT SUPPORTS TO ENSURE LATERAL STABILITY.
3. DO NOT CUT, NOTCH OR DRILL LP LVL.
4. SHIM ALL BEARINGS FOR FULL CONTACT.
5. VERIFY DIMENSIONS BEFORE CUTTING LP LVL TO SIZE.
6. THIS LP LVL IS TO BE USED AS A FLOOR BEAM ONLY.
7. COMPRESSION EDGE BRACING REQUIRED AT 24" O.C. OR LESS.

DESIGN ASSUMES COMPONENTS CARRIED ARE APPLIED TO TOP EDGE OF LP LVL, SUCH THAT LOAD IS DISTRIBUTED EQUALLY TO EACH PLY. ATTACH THE TWO PLIES WITH 3 ROWS OF 16d (3-1/2") NAILS AT 12" OC. STAGGER ROWS. NAILS CAN BE DRIVEN FROM ONE FACE OR HALF FROM EACH FACE. NAILS MAY BE COMMON OR BOX NAILS WITH A MINIMUM SHANK DIAMETER OF 0.131". 16d SINKERS (3-1/4") MAY BE USED, BUT HALF MUST BE DRIVEN FROM EACH FACE.

LOAD TABLE

NOTE: LOADS SHOWN ARE FOR INPUT LOAD CASE (1). OTHER LOAD CASES FOR PATTERN LIVE LOADING ARE CHECKED AS REQUIRED (DIMENSIONS MEASURED FROM LEFT END OF SPAN OR CANTILEVER.)

DISTRIBUTION	SOURCE	TYPE	TOP/SIDE	LOAD	FROM FT-IN-SX	TO FT-IN-SX	LOAD	LDF
UNIFORM	ROOF	LIVE	TOP	315 PLF	00-00-00	16-10-00		1.00
UNIFORM	FLOOR	LIVE	TOP	280 PLF	00-00-00	16-10-00		1.00
UNIFORM	ROOF	DEAD	TOP	210 PLF	00-00-00	16-10-00		0.90
UNIFORM	FLOOR	DEAD	TOP	70 PLF	00-00-00	16-10-00		0.90
UNIFORM	BEAM	WEIGHT		16 PLF	00-00-00	16-10-00		0.90

2 PLIES 1.750 X 16.000 LP LVL2950Fb-2.0E DESIGN CONSISTS OF 2 - PLIES FASTENED TOGETHER (REFER TO NOTES).

DESIGN CRITERIA : MSI: 0. VSI: 0. RSI: 0.

LIVE LOAD	=	40	PSF
DEAD LOAD	=	10	PSF
TOTAL LOAD	=	50	PSF

FLR LEFT SPAN CARR. : 0.00 FT
FLR RIGHT SPAN CARR. : 0.00 FT

DEFLECTION CRITERIA :
LIVE LOAD DEFL: L / 360
TOTAL LOAD DEFL: L / 240

CODE COMPLIANCES :

	REPORT #
APA	PR-L280
ICC-ES	ESR-2403
LADBS	RR-25783
CCMC	11518-R
Florida	FL15228

WARNING NOTES:

THIS COMPONENT DESIGN IS SPECIFICALLY FOR L-P ENGINEERED WOOD PRODUCTS. USE OF THIS DESIGN FOR ANYTHING OTHER THAN LP LVL OR LP LSL OR LP I-JOISTS IS STRICTLY PROHIBITED. ANY MODIFICATION OF THIS DOCUMENT REQUIRES REVIEW BY A DESIGN PROFESSIONAL.

MINIMUM BEARING SIZES ARE SUFFICIENT TO PREVENT CRUSHING OF THE LP LVL BEAM AS DESIGNED. IT IS THE RESPONSIBILITY OF THE PROJECT ENGINEER, ARCHITECT OR DESIGNER TO VERIFY THAT THE SUPPORT STRUCTURE FOR THIS BEAM IS CAPABLE OF SUPPORTING THE REACTIONS.

ANCHOR LP LVL FLOOR BEAM SECURELY TO BEARINGS OR HANGERS.

NO WALL LOAD WAS USED.

LP COMPONENTS ARE MANUFACTURED WITHOUT CAMBER, THEREFORE IN ADDITION TO COMPLYING WITH BUILDING CODE DEFLECTION LIMITS OTHER DEFLECTION CONSIDERATIONS SHOULD BE EVALUATED BY PROJECT DESIGNER, SUCH AS VIBRATION, BOUNCE, AND AESTHETICS.

THIS FLOOR FRAMING COMPONENT HAS BEEN DESIGNED WITH AN INPUT TOTAL LOAD DEFLECTION LIMIT OF L/240. (PROVIDED BY THE LP CUSTOMER). THIS COMPONENT CANNOT BE USED TO SUPPORT CERAMIC TILE FLOORS.

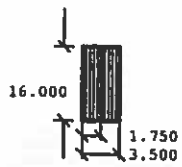

CROSS SECTION

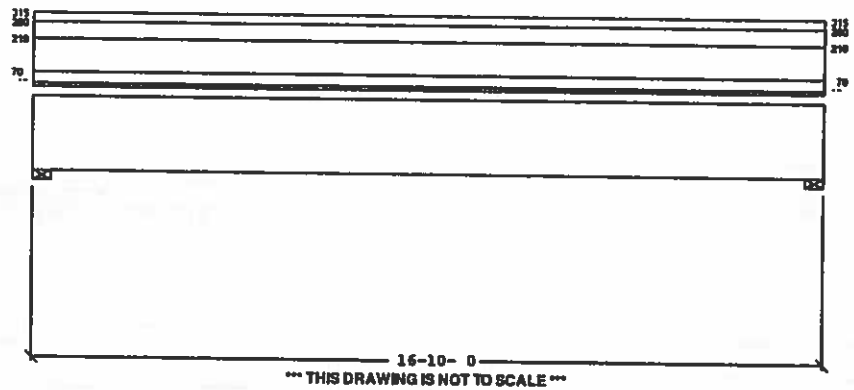

*** THIS DRAWING IS NOT TO SCALE ***

SUPPORT REACTIONS (LBS):

MAXIMUM	BEARING NUMBER 1	2
DOWN	6247	6248
UPLIFT	---	---

MIN BEARING SIZES (IN-SX)
3- 8 3- 8

MAXIMUM DEFLECTIONS

	CALCULATED	ALLOWABLE
LIVE LOAD	0.31" (L/631)	0.50"
*DEAD LOAD	0.31"	
TOTAL LOAD	0.52" (L/379)	0.83"

Handling & Erection

Temporary and permanent bracing for holding component plumb and for resisting lateral forces shall be designed and installed by others. No loads are to be applied to the component until after all the framing and fastening are completed. At no time shall loads greater than design loads be applied to the component.

Design Criteria

The design and material specified are in substantial conformity with the latest revisions of NDS.* Dead load deflection includes adjustment factor for creep. Total load deflection is instantaneous.

Miscellaneous Information

The use of this component shall be specified by the designer of the complete structure. Obtain all the necessary code compliance approval and instructions from the designers of the complete structure before using this component. If the design criteria listed above does not meet local building code requirements, do not use this design. When this drawing is signed and sealed, the structural design is approved as shown in this drawing based on data provided by the customer. LP LVL, LP LSL and CTR, LPI-joists are made without camber and will deflect under load. Wood in direct contact with concrete must be protected as required by code. Continuous lateral support is assumed (wall, floor beam, etc.). LP does not provide on-site inspection. This drawing must have an Architect's or Engineer's seal affixed to be considered an Engineering document.

LP LVL, LP LSL and CTR, LP I-Joist Specifications

* Supports and connections for LP LVL, LP LSL, CTR and LPI to be specific application
* Common nails driven parallel to glue lines shall be spaced a minimum of 4" for 10d and 3" for 8d.
* Do not cut, notch, drill or alter LP LVL, LP LSL and CTR, LP I-Joists except as shown in published material from LP any use of LP LVL, LSL and CTR, LP I-Joists contrary to the limits set forth hereon,negates any express warranty of the product and LP disclaims all implied warranties including the implied warranties of merchantability and fitness for a particular use.

* A COPY OF THIS DRAWING IS TO BE GIVEN TO THE INSTALLING CONTRACTOR

LP is a registered trademark of Louisiana-Pacific Corporation.

Software Provided By:
LP Engineered Wood Products
414 Union Street, Suite 2000
Nashville, TN 37219
Phone 800.515.7570
Fax 866.753.4369

10/26/12 IBC 2009

DWG #

SHEET #

File: C:\Users\camiley\Documents\Cedar Creek\Calcs\NB Goodwyn\FinerHomes\The Savannah\WOODE.SPX

The Savannah J-1 VA CEDAR CREEK

2014.1 Allowable Stress Design

NOTE:
1. THIS COMPONENT IS DESIGNED TO SUPPORT ONLY THE VERTICAL LOADS SHOWN VERIFICATION OF LOADING, DEFLECTION LIMITATIONS, FRAMING METHODS, WIND AND SEISMIC BRACING, AND OTHER LATERAL BRACING THAT IS ALWAYS REQUIRED IS THE RESPONSIBILITY OF THE PROJECT ENGINEER OR ARCHITECT.
2. PROVIDE RESTRAINT AT SUPPORTS TO ENSURE LATERAL STABILITY.
3. DO NOT CUT, NOTCH OR DRILL LPI FLANGES.
4. SHIM ALL BEARINGS FOR FULL CONTACT.
5. VERIFY DIMENSIONS BEFORE CUTTING LPI TO SIZE.
6. THIS LPI IS TO BE USED AS A FLOOR JOIST ONLY.
7. COMPRESSION EDGE BRACING REQUIRED AT 71" O.C. OR LESS.

LOAD TABLE

NOTE: LOADS SHOWN ARE FOR INPUT LOAD CASE (1). OTHER LOAD CASES FOR PATTERN LIVE LOADING ARE CHECKED AS REQUIRED.
(DIMENSIONS MEASURED FROM LEFT END OF SPAN OR CANTILEVER.)

DISTRIBUTION	SOURCE	TYPE	TOP/SIDE	LOAD	FROM FT-IN-SX	TO FT-IN-SX	LOAD	LDF	LABEL
UNIFORM	FLOOR	LIVE	TOP	64 PLF	00-00-00	41-11-00		1.00	
UNIFORM	FLOOR	DEAD	TOP	16 PLF	00-00-00	41-11-00		0.90	

1 LPI 20Plus DEPTH 11.875"
WEB: 0.375"
FLANGE 1.50 X 2.50

DESIGN CRITERIA : MSI: 0 VSI: 0.55 RSI: 0.62

LIVE LOAD	=	40	PSF
DEAD LOAD	=	10	PSF
TOTAL LOAD	=	50	PSF

SPACING = 19.20 IN. C/C

DEFLECTION CRITERIA :
LIVE LOAD DEFL: L / 480
TOTAL LOAD DEFL: L / 240

CODE COMPLIANCES :

	REPORT #
APA	PR-L238
ICC-ES	ESR-1305
LADBS	RR-25099
CCMC	12412-R
Florida	FL15401

WARNING NOTES:

THIS COMPONENT DESIGN IS SPECIFICALLY FOR L-P ENGINEERED WOOD PRODUCTS. USE OF THIS DESIGN FOR ANYTHING OTHER THAN LP LVL OR LP LSL OR LP I-JOISTS IS STRICTLY PROHIBITED. ANY MODIFICATION OF THIS DOCUMENT REQUIRES REVIEW BY A DESIGN PROFESSIONAL.

MINIMUM BEARING SIZES ARE SUFFICIENT TO PREVENT CRUSHING OF THE LPI JOIST AS DESIGNED. IT IS THE RESPONSIBILITY OF THE PROJECT ENGINEER, ARCHITECT OR DESIGNER TO VERIFY THAT THE SUPPORT STRUCTURE FOR THIS JOIST IS CAPABLE OF SUPPORTING THE REACTIONS.

ANCHOR LPI JOIST SECURELY TO BEARINGS OR HANGERS.

APPLIED LOADS OVER END BEARINGS AND LOADS EXCEEDING 250 LBS OVER INTERMEDIATE BEARINGS MUST BE TRANSFERED DIRECTLY TO SUPPORT BY RIM BOARD, BLOCKINGS, SQUASH BLOCKS OR OTHER DEVICE.

DEFLECTION ASSUMES COMPOSITE ACTION WITH GLUED AND NAILED 23/32" APA RATED SHEATHING (48/24 SPAN RATING)

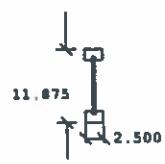

CROSS SECTION

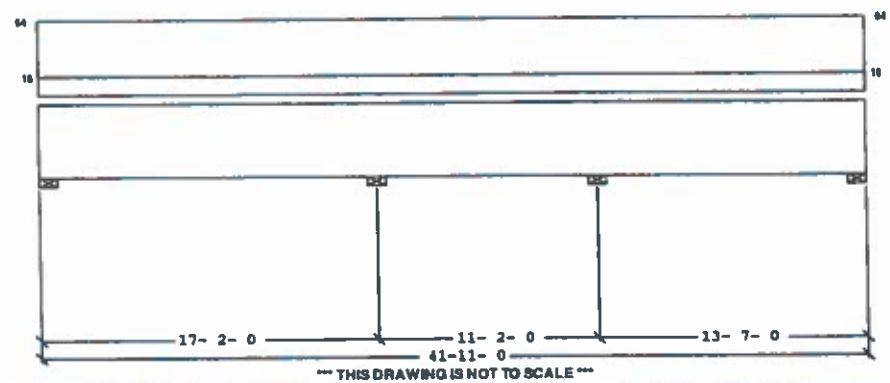

*** THIS DRAWING IS NOT TO SCALE ***

SUPPORT REACTIONS (LBS):

MAXIMUM	BEARING 1	2	3	4
DOWN	585	1439	1176	489
UPLIFT	---	---	---	---

MIN BEARING SIZES (IN-SX)

1	2	3	4
1- 8	3- 8	3- 8	1- 8

MAXIMUM DEFLECTIONS

	CALCULATED	ALLOWABLE
LIVE LOAD	0.25" (L/831)	0.43"
*DEAD LOAD	0.09"	
TOTAL LOAD	0.30" (L/678)	0.86"

Handling & Erection

Temporary and permanent bracing for holding component plumb and for resisting lateral forces shall be designed and installed by others. No loads are to be applied to the component until after all the framing and fastening are completed. At no time shall loads greater than design loads be applied to the component.

Design Criteria

The design and material specified are in substantial conformity with the latest revisions of NDS.* Dead load deflection includes adjustment factor for creep. Total load deflection is instantaneous.

LP® SolidStart® LSL, LVL and I-Joist Specifications

Do not cut, notch, drill or alter LP SolidStart LSL, LVL and I-Joists except as shown in published material from LP. Any use of LP SolidStart LSL, LVL and I-Joists contrary to the limits set forth hereon, negates any express warranty of the product and LP disclaims all implied warranties including the implied warranties of merchantability and fitness for a particular use.

A COPY OF THIS DRAWING IS TO BE GIVEN TO THE INSTALLING CONTRACTOR.

LP and SolidStart are registered trademarks of Louisiana-Pacific Corporation.

Cal. Prop 65 Warning: Use of this product may result in exposure to wood dust, known to the State of California to cause cancer.

User Notes (User is responsible for the accuracy of these no

Software Provided By:
LP Engineered Wood Products
414 Union Street, Suite 2000
Nashville, TN 37219
Phone 800.515.7570
Fax 866.753.4369

11/17/14 IBC 2012

DWG #

SHEET #

File: C:\Users\csmiley\Documents\Cedar Creek\Calcs\NB Goodwyn\FinerHomes\The Savannah\WOODE.SPX

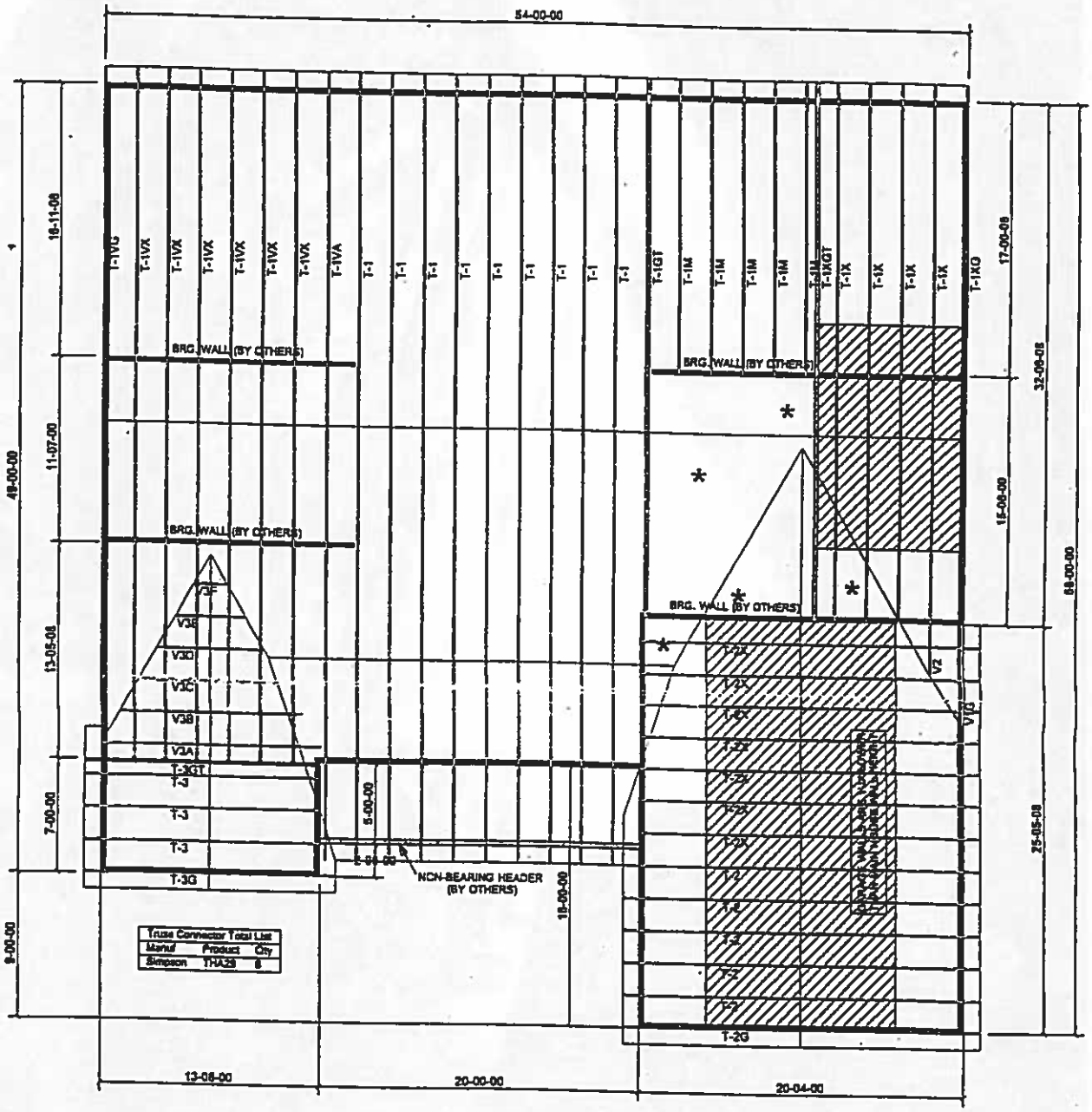

ROOF TRUSS LAYOUT

SAVANNAH MODEL W/ ROOM OVER GARAGE & PARTIAL ATTIC ROOM

eet 1 of 1

Customer: FINER HOMES

Job Name: LOT 10-4C HARPERS MILL

Sales Rep: ALLAN SIMMONS

Job number: 25917 Tech:

STRUC-TEC

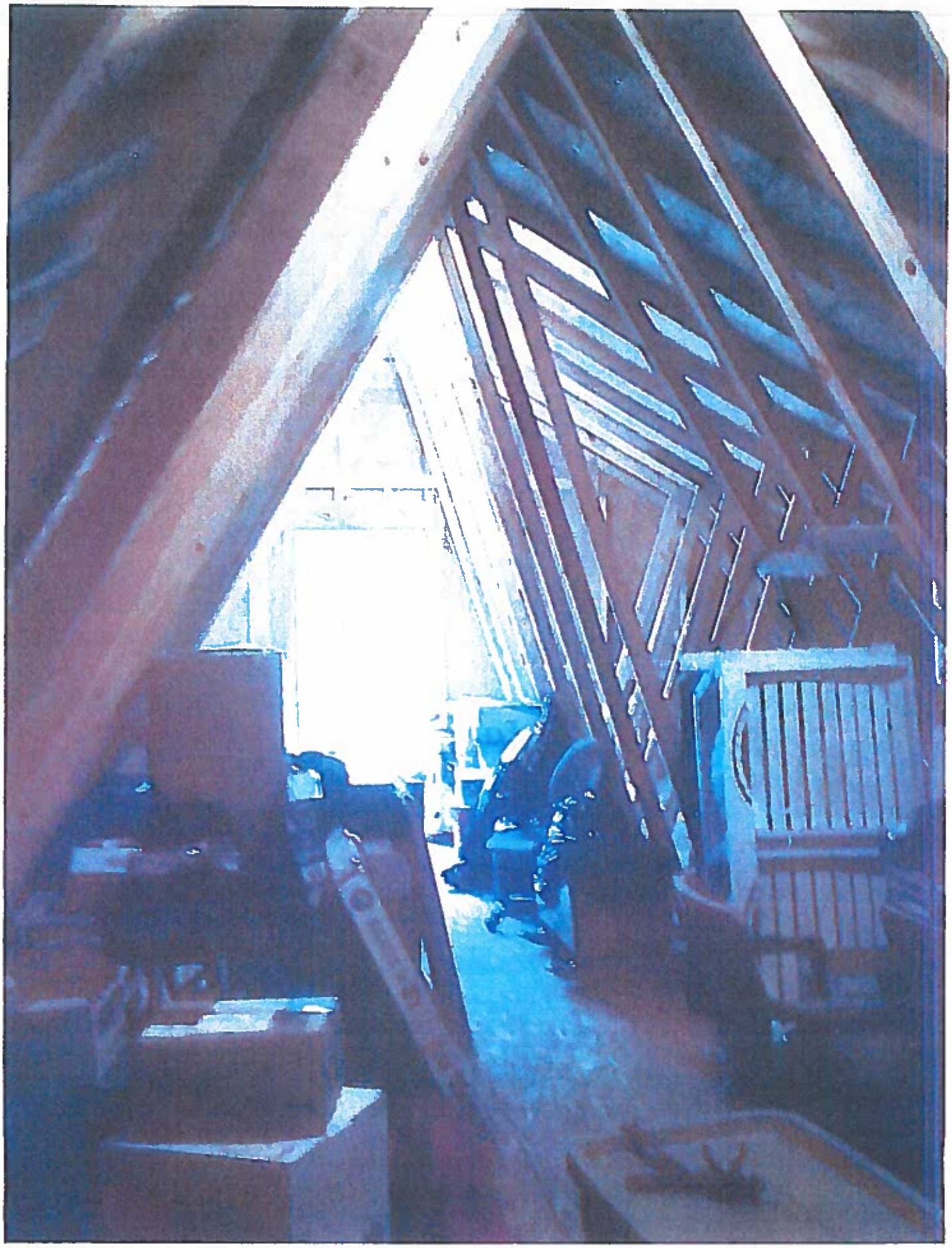

Job	Truss	Truss Type	Qty	Ply	SAVANNAH W/ ROG & PART ATTIC
25917	T-1VX	COMMON	6	1	Job Reference (optional)

ructural Technologies, Doswell, VA 23047 Run: 7.600 s Oct 3 2014 Print: 7.600 s Oct 3 2014 MiTek Industries, Inc. Fri Mar 20 14:56:55 2015 Page 1
ID:hNjBGyXDZHd0w6QHrgvER7yQsfP-F7B1R4QBnciPWOfiq6UADMcLs89bAfRVKgu63DzZ0k6

-1-0-0	8-7-12	14-5-10	21-0-0	28-4-12	34-11-9	42-0-0
1-0-0	8-7-12	5-9-14	6-6-6	7-4-12	6-6-13	7-0-7

Scale = 1:77.3

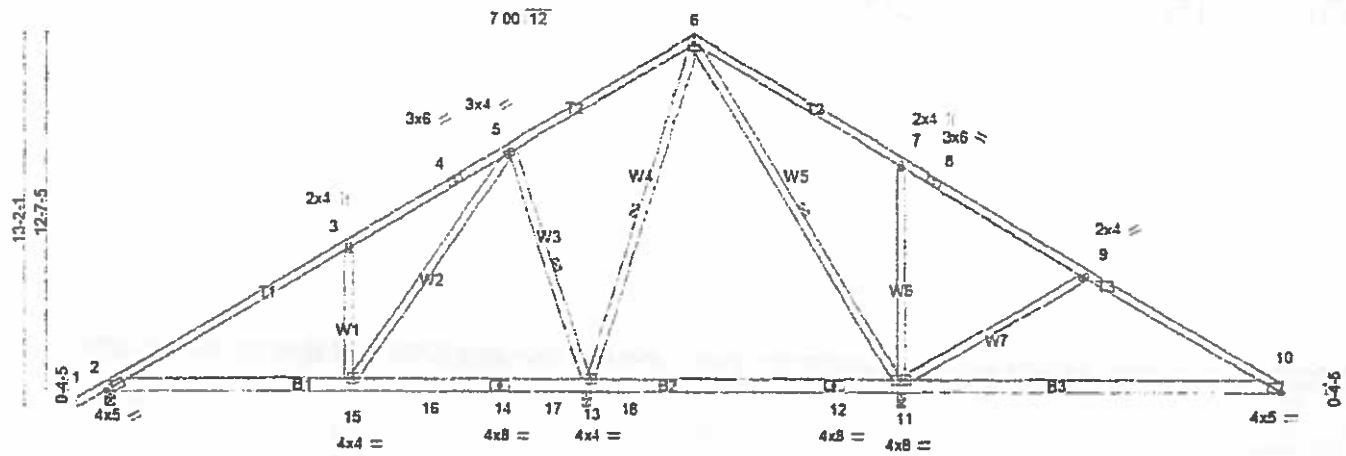

8-7-12	17-1-4	26-4-12	42-0-0
8-7-12	8-5-8	11-3-8	13-7-4

Plate Offsets (X,Y)-- [2:0-3-3,0-1-14], [10:0-1-4,0-0-3]

LOADING (psf)		SPACING-	2-0-0	CSI.		DEFL.	in	(loc)	l/defl	L/d	PLATES	GRIP
TCLL	20.0	Plate Grip DOL	1.15	TC	0.76	Vert(LL)	-0.36	10-11	>448	240	MT20	244/190
TCDL	10.0	Lumber DOL	1.15	BC	0.69	Vert(TL)	-0.67	10-11	>242	180		
BCLL	0.0 *	Rep Stress Incr	YES	WB	0.54	Horz(TL)	0.01	10	n/a	n/a		
BCDL	10.0	Code IRC2009/TPI2007		(Matrix)							Weight: 268 lb	FT = 5%

LUMBER-
TOP CHORD 2x4 SP No.2
BOT CHORD 2x6 SP No.2 *Except*
B3: 2x6 SP No.1D
WEBS 2x4 SP No.3

STACH (1) 2X6 ATOP BOTTOM CHORD AS SHOWN. ATTACH W/ 2X4 X 11" BLOCKS SET 36" OC ONE FACE. USE (4) 16D BOX NAILS EACH MEMBER EACH CONNECTION.

BRACING-
TOP CHORD Structural wood sheathing directly applied or 5-2-7 oc purlins.
BOT CHORD Rigid ceiling directly applied or 6-0-0 oc bracing. Except:
10-0-0 oc bracing: 2-15.
WEBS 1 Row at midpt 5-13, 6-13, 6-11

MiTek recommends that Stabilizers and required cross bracing be installed during truss erection, in accordance with Stabilizer Installation guide.

REACTIONS. (lb/size) 2=615/0-4-0, 13=1657/0-3-8, 11=1248/0-3-8, 10=386/Mechanical
Max Horz 2=293(LC 5)
Max Uplift2=-81(LC 6), 13=-215(LC 6), 11=-235(LC 7), 10=-21(LC 7)
Max Grav 2=620(LC 10), 13=1657(LC 1), 11=1250(LC 11), 10=397(LC 11)

REPAIR

FORCES. (lb) - Maximum Compression/Maximum Tension
TOP CHORD 1-2=0/33, 2-3=-653/68, 3-4=-613/165, 4-5=-455/197, 5-6=-42/402, 6-7=-1/324, 7-8=-36/327, 8-9=-73/144, 9-10=-343/58
BOT CHORD 2-15=-137/448, 15-16=-94/191, 14-16=-94/191, 14-17=-94/191, 13-17=-94/191, 13-18=-137/233, 12-18=-137/233, 11-12=-137/233, 10-11=-14/214
WEBS 3-15=-435/211, 5-15=-219/877, 5-13=-703/256, 6-13=-539/34, 6-11=-170/0, 7-11=-458/225, 9-11=-412/189

June 16, 2016

NOTES-
1) Unbalanced roof live loads have been considered for this design.
2) Wind: ASCE 7-05; 90mph; TCDL=6.0psf; BCDL=3.0psf; h=25ft; Cat. II; Exp B; enclosed; MWFRS (low-rise) gable end zone and C-C Exterior(2) zone; cantilever left and right exposed ; end vertical left and right exposed;C-C for members and forces & MWFRS for reactions shown; Lumber DOL=1.15 plate grip DOL=1.15
3) This truss has been designed for a 20.0 psf bottom chord live load nonconcurrent with any other live loads.
4) * This truss has been designed for a live load of 20.0psf on the bottom chord in all areas where a rectangle 3-6-0 tall by 2-0-0 wide will fit between the bottom chord and any other members, with BCDL = 10.0psf.
5) Refer to girder(s) for truss to truss connections.
6) Provide mechanical connection (by others) of truss to bearing plate capable of withstanding 81 lb uplift at joint 2, 215 lb uplift at joint 13, 235 lb uplift at joint 11 and 21 lb uplift at joint 10.
7) This truss is designed in accordance with the 2009 International Residential Code sections R502.11.1 and R802.10.2 and referenced standard ANSI/TPI 1.
8) "Semi-rigid pitchbreaks with fixed heels" Member end fixity model was used in the analysis and design of this truss.

LOAD CASE(S) Standard

James Fletcher design when "hide comments" is selected.

Screen shot of James Fletcher design when "show comments" is selected.

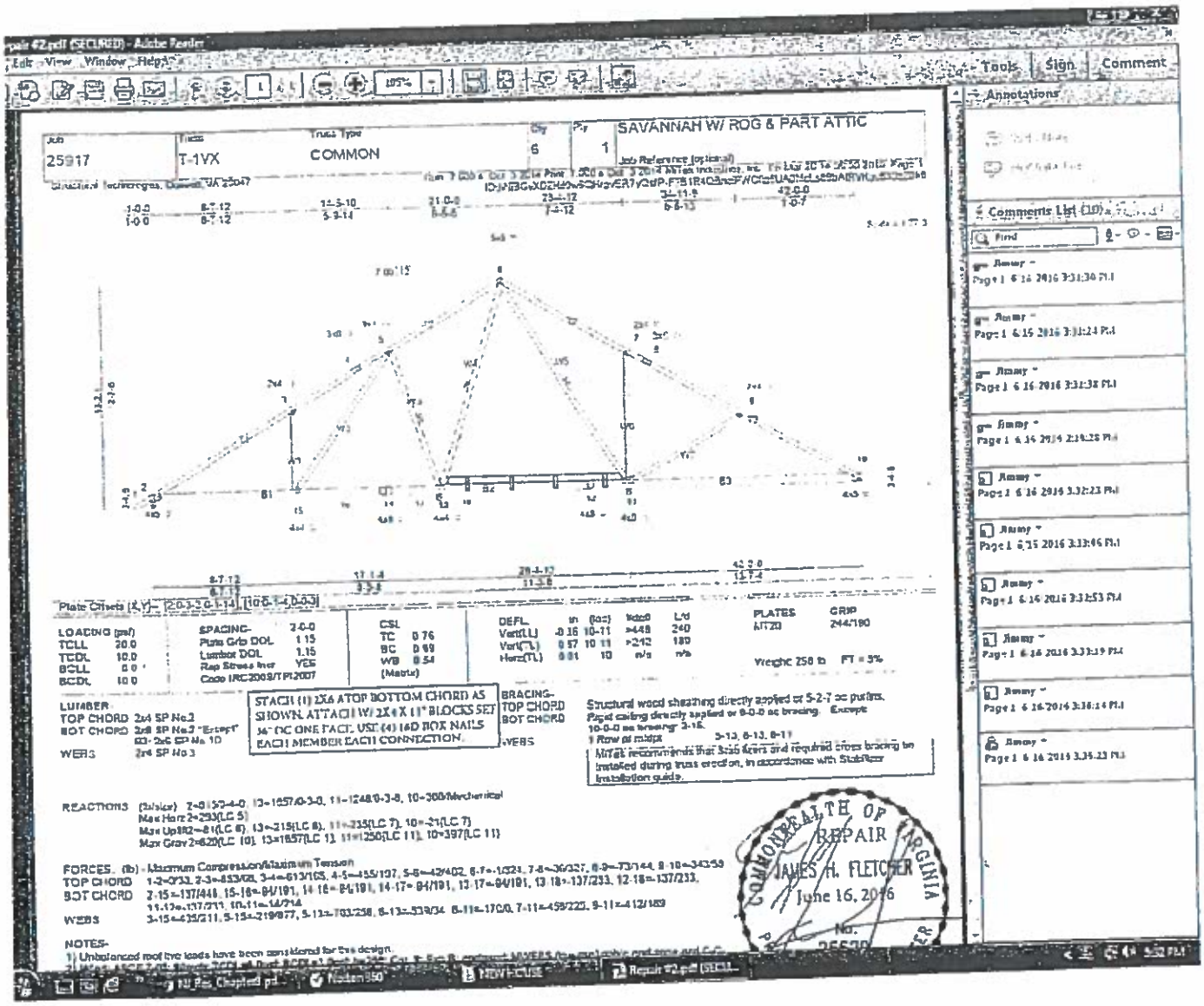

Job	Truss	Truss Type	Qty	Ply	SAVANNAH W/ ROG & PART ATTIC
25917	T-1VX	COMMON	6	1	Job Reference (optional)

.ctural Technologies, Doswell, VA 23047 Run: 7.600 s Oct 3 2014 Print: 7.600 s Oct 3 2014 MiTek Industries, Inc. Fri Mar 20 14:56:55 2015 Page 1
ID:hNjBGyXDZHd0w6QHrgvER7yOsfP-F7B1R4QBnciPWOfiq6UA0McLs89bAfRVKgu63DzZ0k6

-1-0-0	8-7-12	14-5-10	21-0-0	28-4-12	34-11-9	42-0-0
1-0-0	8-7-12	5-9-14	6-6-6	7-4-12	6-6-13	7-0-7

Scale = 1:77.3

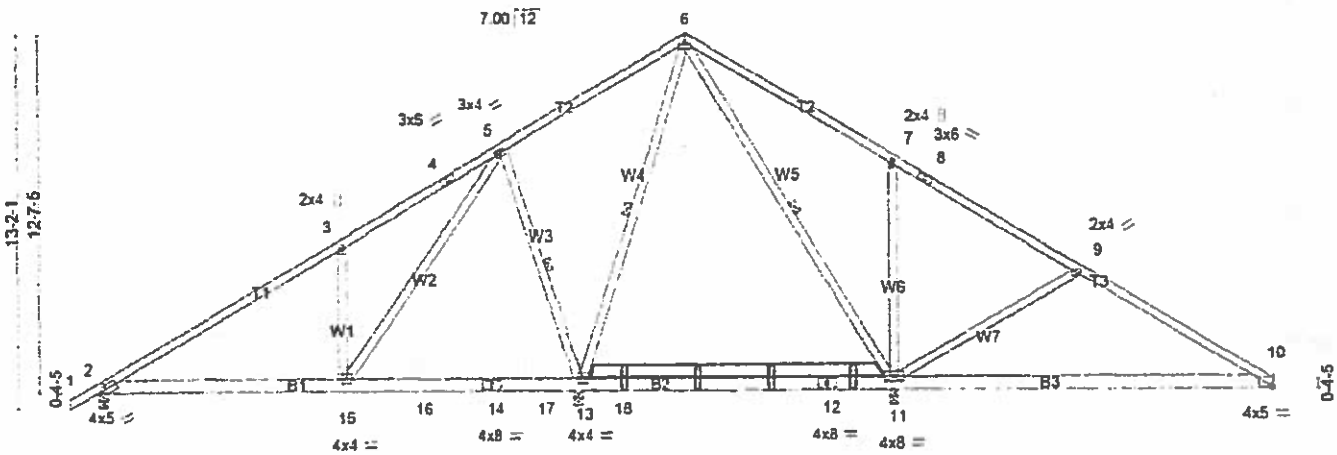

8-7-12	17-1-4	28-4-12	42-0-0
8-7-12	8-5-8	11-3-8	13-7-4

Plate Offsets (X,Y)-- [2:0-3-3,0-1-14], [10:0-1-4,0-0-3]

LOADING (psf)		SPACING-	2-0-0	CSI.		DEFL.	in	(loc)	l/defl	L/d	PLATES	GRIP
TCLL	20.0	Plate Grip DOL	1.15	TC	0.76	Vert(LL)	-0.36	10-11	>448	240	MT20	244/190
TCDL	10.0	Lumber DOL	1.15	BC	0.69	Vert(TL)	-0.67	10-11	>242	180		
BCLL	0.0 *	Rep Stress Incr	YES	WB	0.54	Horz(TL)	0.01	10	n/a	n/a		
BCDL	10.0	Code IRC2009/TPI2007		(Matrix)							Weight: 288 lb	FT = 5%

LUMBER-
TOP CHORD 2x4 SP No.2
BOT CHORD 2x6 SP No.2 *Except*
B3: 2x6 SP No.1D
WEBS 2x4 SP No.3

STACH (1) 2X6 ATOP BOTTOM CHORD AS SHOWN. ATTACH W/ 2X4 X 11" BLOCKS SET 36" OC ONE FACE. USE (4) 16D BOX NAILS EACH MEMBER EACH CONNECTION.

BRACING-
TOP CHORD Structural wood sheathing directly applied or 5-2-7 oc purlins.
BOT CHORD Rigid ceiling directly applied or 6-0-0 oc bracing. Except:
10-0-0 oc bracing: 2-15.
WEBS 1 Row at midpt 5-13, 6-13, 6-11

MiTek recommends that Stabilizers and required cross bracing be installed during truss erection, in accordance with Stabilizer Installation guide.

REACTIONS. (lb/size) 2=615/0-4-0, 13=1657/0-3-8, 11=1248/0-3-8, 10=366/Mechanical
Max Horz 2=293(LC 5)
Max Uplift2=-81(LC 6), 13=-215(LC 6), 11=-235(LC 7), 10=-21(LC 7)
Max Grav 2=620(LC 10), 13=1657(LC 1), 11=1250(LC 11), 10=397(LC 11)

FORCES. (lb) - Maximum Compression/Maximum Tension
TOP CHORD 1-2=0/33, 2-3=-653/68, 3-4=-613/165, 4-5=-455/197, 5-6=-42/402, 6-7=-1/324, 7-8=-36/327, 8-9=-73/144, 9-10=-343/58
BOT CHORD 2-15=-137/448, 15-16=-94/191, 14-16=-94/191, 14-17=-94/191, 13-17=-94/191, 13-18=-137/233, 12-18=-137/233, 11-12=-137/233, 10-11=-14/214
WEBS 3-15=-435/211, 5-15=-219/877, 5-13=-703/256, 6-13=-539/34, 6-11=-170/0, 7-11=-458/225, 9-11=-412/189

COMMONWEALTH OF VIRGINIA
REPAIR
JAMES H. FLETCHER
June 16, 2016
No. 26629
PROFESSIONAL ENGINEER

NOTES-
1) Unbalanced roof live loads have been considered for this design.
2) Wind: ASCE 7-05; 90mph; TCDL=6.0psf; BCDL=3.0psf; h=25ft; Cat. II; Exp B; enclosed; MWFRS (low-rise) gable end zone and C-C Exterior(2) zone; cantilever left and right exposed ; end vertical left and right exposed;C-C for members and forces & MWFRS for reactions shown; Lumber DOL=1.15 plate grip DOL=1.15
3) This truss has been designed for a 20.0 psf bottom chord live load nonconcurrent with any other live loads.
4) * This truss has been designed for a live load of 20.0psf on the bottom chord in all areas where a rectangle 3-6-0 tall by 2-0-0 wide will fit between the bottom chord and any other members, with BCDL = 10.0psf.
5) Refer to girder(s) for truss to truss connections.
6) Provide mechanical connection (by others) of truss to bearing plate capable of withstanding 81 lb uplift at joint 2, 215 lb uplift at joint 13, 235 lb uplift at joint 11 and 21 lb uplift at joint 10.
7) This truss is designed in accordance with the 2009 International Residential Code sections R502.11.1 and R802.10.2 and referenced standard ANSI/TPI 1.
8) "Semi-rigid pitchbreaks with fixed heels" Member end fixity model was used in the analysis and design of this truss.

LOAD CASE(S) Standard

Final James Fletcher design.

Gmail

Leah Thorpe <leahbthorpe@gmail.com>

DPOR complaint

4 messages

Dunsing, Sharon (DPOR) <Sharon.Dunsing@dpor.virginia.gov> Tue, Dec 20, 2016 at 12:59 PM
To: "leahbthorpe@gmail.com" <leahbthorpe@gmail.com>

Ms. Thorpe,

I am the investigator handling the complaint you filed against James Fletcher. I left a message for you today. Please give me a call when you have a few minutes to discuss this matter.

Sharon Dunsing

Investigator

Regulatory Programs and Compliance Section

Department of Professional and Occupational Regulation

804-356-4404

866-325-4939 FAX

Gmail

Leah Thorpe <leahbthorpe@gmail.com>

DPOR complaint

Dunsing, Sharon (DPOR) <Sharon.Dunsing@dpor.virginia.gov> Wed, Jan 18, 2017 at 11:50 AM
To: Leah Thorpe <leahbthorpe@gmail.com>

Thank you for the additional information. The file is still open and the investigation is continuing. I will give you a call when I have an update.

Sharon Dunsing

Investigator

Regulatory Programs and Compliance Section

Department of Professional and Occupational Regulation

804-356-4404

866-325-4939 FAX

MITEK DOCUMENT ON PLAN STAMPING

Open Letter to Our Valued Customers: MiTek Professional Engineers
Provided to Component Manufacturers

Dear Valued MiTek Customer,

There have been numerous discussions recently about how to accurately describe the process through which a component manufacturer ("CM") receives truss designs sealed by professional engineers at MiTek.

This topic is extremely important because an innocent but inaccurate description of the process might lead to an unfounded charge against your company that it is engaged in the unlawful practice of engineering, or against one of MiTek's engineers that he/she is engaged in the illegal practice of "plan stamping," i.e., the sealing by a professional engineer of design work which has neither been prepared by the engineer nor by a person working under the engineer's responsible charge.

Here is my attempt at an accurate description of the process:

As you know, most ***MiTek*** plate customers have licensed ***MiTek*** software installed on their business computers into which they can input design parameters and internally generate preliminary truss designs. These preliminary designs are important for preparing meaningful truss quotes, for inventory analysis and other purposes.

In some states, for certain types of structures, a preliminary design prepared by the CM without professional engineer involvement may be all that is required for the building/approval process. This is a question of applicable law, building regulation and inspector discretion.

In other cases, however, a truss design bearing the professional seal of a professional engineer licensed in the applicable jurisdiction may be required. Unless the CM employs an engineer, the CM will often request such a sealed design from MiTek. It is at this step in the process where the need for accurate description becomes particularly critical.

In making a request to MiTek for a sealed truss design, the CM could simply call, fax or mail a request containing the appropriate design parameters to be used. More typically, however, the CM will first retrieve from storage on his computer an electronic date file constituting a preliminary design the CM has previously run as well as all design parameters input by the CM to generate such design. The CM will then use a "Send" program to electronically transmit over the internet a detailed request for a sealed truss design to MiTek. **Understanding how this Send program works is critical to a proper understanding and description of the process.**

Immediately before the Send program is activated to initiate the electronic transmission to MiTek, the CM will normally have an image of the preliminary design he previously prepared displayed on his local computer monitor. Accordingly, it is not surprising that many CM's assume that what happens when they activate the send program is that a full copy of the preliminary design will be sent to MiTek for review. However, this assumption is wrong!

What the Send program actually does is extract and transmit to MiTek only the design parameters which were input by the CM into his computer to generate the preliminary design. These transmitted parameters are automatically input into MiTek's computer at its engineering office to eliminiate the possibility of data entry error, and then a design is run "from scratch" by MiTek's engineers. MiTek engineers have knowledge and complete control of the lumber values, plate properties and other design settings existing on MiTek's computer. Thus, when MiTek's engineers apply their professional seals to designs, they are sealing work which they have prepared or which has been prepared under their direct supervision or control. They are not sealing preliminary designs generated by a CM at a location remote from MiTek's engineering office.

I hope this explanation helps to clarify the process.

Sincerely,

Stephen W. Cabler, P.E.

Vice-President, Engineering

ENGINEERING BY
TRENCO
A MiTek Affiliate

Trenco
818 Soundside Rd
Edenton, NC 27932

Re: 25917
SAVANNAH W/ ROG & PART ATTIC

The truss drawing(s) referenced below have been prepared by Truss Engineering Co. under my direct supervision based on the parameters provided by Structural Technologies.

Pages or sheets covered by this seal: E9555866 thruE9555867

My license renewal date for the state of Virginia is December 31, 2016.

Lumber design values are in accordance with ANSI/TPI 1 section 6.3
These truss designs rely on lumber values established by others.

COMMONWEALTH OF VIRGINIA
FRANK R. LASSITER
Lic. No. 034728
PROFESSIONAL ENGINEER

June 8,2016

Lassiter, Frank

IMPORTANT NOTE: The seal on these truss component designs is a certification that the engineer named is licensed in the jurisdictions(s) identified and that the designs comply with ANSI/TPI 1. These designs are based upon parameters shown (e.g., loads, supports, dimensions, shapes and design codes), which were given to Trenco. Any project specific information included is for Trenco's customer's file reference purpose only, and was not taken into account in the preparation of these designs. Trenco has not independently verified the applicability of the design parameters or the designs for any particular building. Before use, the building designer should verify applicability of the design parameters and properly incorporate these designs into the overall building design per ANSI/TPI 1, Chapter 2.

Job	Truss	Truss Type	Qty	Ply	SAVANNAH W/ ROG & PART ATTIC
25917	T-1	ROOF SPECIAL	9	1	E9555866

Job Reference (optional)

Structural Technologies, Doswell, VA 23047

7.640 s Nov 10 2015 MiTek Industries, Inc. Tue Jun 07 15:24:07 2016 Page 1

ID:hNjBGyXDZHd0w6QHrgvER7yQsfP-8i_rZI6wkTsr?zKv3GtGUKKq3CployTeZMAqLczBeqc

-1-0-0	7-1-15	13-10-4	21-0-0	28-1-12	35-5-7	41-10-0	47-0-0	49-0-0
1-0-0	7-1-15	6-8-5	7-1-12	7-1-12	7-3-11	6-4-9	5-2-0	1-0-0

REPAIR TO ADD LOAD AS SHOWN

Scale = 1:94.0

ATTACH 2X4 SPF NO.2 TO ONE FACE OF TRUSS WITH CLUSTER OF (3) 10d (3"X0.131") NAILS IN EACH END.

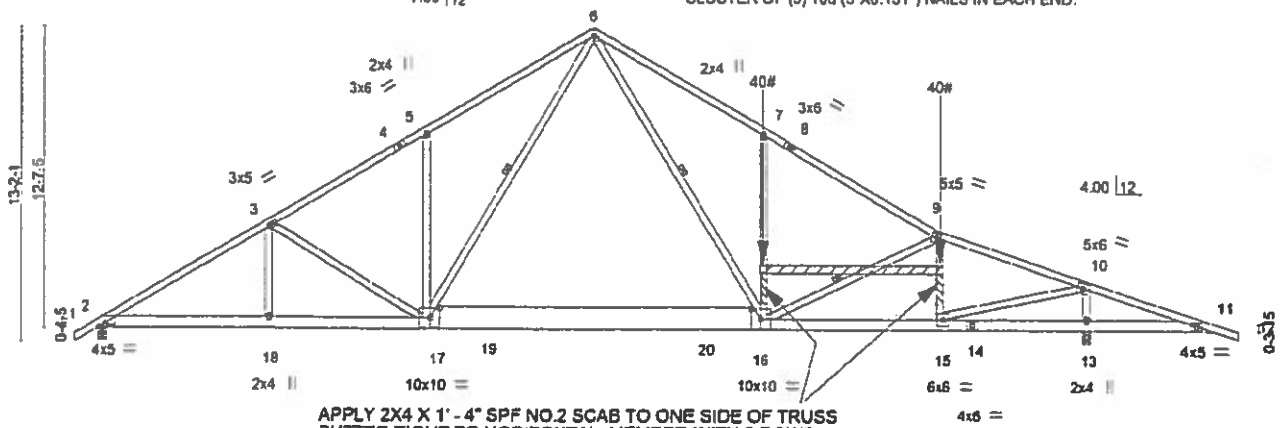

APPLY 2X4 X 1' - 4" SPF NO.2 SCAB TO ONE SIDE OF TRUSS BUTTED TIGHT TO HORIZONTAL MEMBER WITH 2 ROWS OF 10d (3" X 0.131") NAILS SPACED 3.0" O.C.

7-1-15	13-10-4	28-1-12	35-5-7	41-10-0	42-0-0	47-0-0
7-1-15	6-8-5	14-3-8	7-3-11	6-4-9	0-2-0	5-0-0

Plate Offsets (X,Y)-- [2:0-3-4,0-1-3], [16:0-4-12,0-5-0], [17:0-4-12,0-5-0]

LOADING (psf)		SPACING-	2-0-0	CSI.		DEFL.	in	(loc)	l/defl	L/d	PLATES	GRIP
TCLL	20.0	Plate Grip DOL	1.15	TC	0.98	Vert(LL)	-0.27	16-17	>999	240	MT20	244/190
TCDL	10.0	Lumber DOL	1.15	BC	0.76	Vert(TL)	-0.54	16-17	>918	180		
BCLL	0.0 *	Rep Stress Incr	YES	WB	0.76	Horz(TL)	0.09	13	n/a	n/a		
BCDL	10.0	Code IRC2009/TPI2007		(Matrix)							Weight: 336 lb	FT = 5%

LUMBER-

TOP CHORD 2x4 SP No.1 *Except* 9-12,1-4: 2x4 SP No.2

BOT CHORD 2x6 SP No.2 *Except* 16-17: 2x12 SP No.2

WEBS 2x4 SP No.3 *Except* 10-15: 2x4 SP No.2

BRACING-

TOP CHORD Sheathed.

BOT CHORD Rigid ceiling directly applied or 6-0-0 oc bracing.

WEBS 1 Row at midpt 6-17, 6-16, 9-16

REACTIONS. (lb/size) 2=1907/0-4-0, 13=2417/0-4-0
Max Horz 2=-300(LC 4)
Max Uplift 2=-241(LC 6), 13=-410(LC 7)

FORCES. (lb) - Maximum Compression/Maximum Tension

TOP CHORD 1-2=0/33, 2-3=-3219/394, 3-4=-2766/342, 4-5=-2584/378, 5-6=-2764/513, 6-7=-2759/496, 7-8=-2556/351, 8-9=-2755/327, 9-10=-2645/252, 10-11=-423/645, 11-12=0/22

BOT CHORD 2-18=-330/2681, 17-18=-331/2686, 17-19=-50/1632, 19-20=-50/1632, 16-20=-50/1632, 15-16=-167/2483, 14-15=-560/439, 13-14=-560/439, 11-13=-560/439

WEBS 3-18=0/340, 3-17=-468/159, 5-17=-436/214, 6-17=-268/1323, 6-16=-240/1304, 7-16=-487/238, 9-16=-281/79, 9-15=-805/201, 10-15=-553/3103, 10-13=-2187/487

NOTES-

1) Unbalanced roof live loads have been considered for this design.
2) Wind: ASCE 7-05; 90mph; TCDL=6.0psf; BCDL=3.0psf; h=25ft; Cat. II; Exp B; enclosed; MWFRS (low-rise) gable end zone and C-C Exterior(2) zone; cantilever left and right exposed ; end vertical left and right exposed;C-C for members and forces & MWFRS for reactions shown; Lumber DOL=1.15 plate grip DOL=1.15
3) This truss has been designed for a 20.0 psf bottom chord live load nonconcurrent with any other live loads
4) * This truss has been designed for a live load of 20.0psf on the bottom chord in all areas where a rectangle 3-6-0 tall by 2-0-0 wide will fit between the bottom chord and any other members, with BCDL = 10.0psf.
5) Provide mechanical connection (by others) of truss to bearing plate capable of withstanding 241 lb uplift at joint 2 and 410 lb uplift at joint 13.
6) "Semi-rigid pitchbreaks with fixed heels" Member end fixity model was used in the analysis and design of this truss.
7) Hanger(s) or other connection device(s) shall be provided sufficient to support concentrated load(s) 40 lb down and 9 lb up at 28-1-12, and 40 lb down and 9 lb up at 35-7-10 on bottom chord. The design/selection of such connection device(s) is the responsibility of others.
8) In the LOAD CASE(S) section, loads applied to the face of the truss are noted as front (F) or back (B).

LOAD CASE(S) Standard

1) Dead + Roof Live (balanced) + Uninhab. Attic Storage: Lumber Increase=1.15, Plate Increase=1.15
Uniform Loads (plf)
Vert: 1-6=-60, 6-9=-60, 9-12=-60, 2-19=-20, 19-20=-60, 11-20=-20

COMMONWEALTH OF VIRGINIA
FRANK R. LASSITER
Lic. No. 034728
PROFESSIONAL ENGINEER

June 8,2016

Continued on page 2

WARNING - Verify design parameters and READ NOTES ON THIS AND INCLUDED MiTek REFERENCE PAGE MII-7473 rev. 10/03/2015 BEFORE USE.
Design valid for use only with MiTek® connectors. This design is based only upon parameters shown, and is for an individual building component, not a truss system. Before use, the building designer must verify the applicability of design parameters and properly incorporate this design into the overall building design. Bracing indicated is to prevent buckling of individual truss web and/or chord members only. Additional temporary and permanent bracing is always required for stability and to prevent collapse with possible personal injury and property damage. For general guidance regarding the fabrication, storage, delivery, erection and bracing of trusses and truss systems, see ANSI/TPI1 Quality Criteria, DSB-89 and BCSI Building Component Safety Information available from Truss Plate Institute, 218 N. Lee Street, Suite 312, Alexandria, VA 22314.

ENGINEERING BY TRENCO
A MiTek Affiliate
818 Soundside Road
Edenton, NC 27932

LOAD CASE(S) Standard

Concentrated Loads (lb)

Vert: 16=-40(F) 15=-40(F)

COMMONWEALTH OF VIRGINIA

FRANK R. LASSITER

Lic. No. 034728

PROFESSIONAL ENGINEER

June 8,2016

WARNING - Verify design parameters and READ NOTES ON THIS AND INCLUDED MITEK REFERENCE PAGE MII-7473 rev. 10/03/2015 BEFORE USE.

Design valid for use only with MiTek® connectors. This design is based only upon parameters shown, and is for an individual building component, not a truss system. Before use, the building designer must verify the applicability of design parameters and properly incorporate this design into the overall building design. Bracing indicated is to prevent buckling of individual truss web and/or chord members only. Additional temporary and permanent bracing is always required for stability and to prevent collapse with possible personal injury and property damage. For general guidance regarding the fabrication, storage, delivery, erection and bracing of trusses and truss systems, see **ANSI/TPI1 Quality Criteria, DSB-89 and BCSI Building Component**

ENGINEERING BY TRENCO A MiTek Affiliate

818 Anderson Road

ENGINEERING BY
TRENCO
A MiTek Affiliate

Trenco
818 Soundside Rd
Edenton, NC 27932

Re: 25917
SAVANNAH W/ ROG & PART ATTIC

The truss drawing(s) referenced below have been prepared by Truss Engineering Co. under my direct supervision based on the parameters provided by Structural Technologies.

Pages or sheets covered by this seal: E10085072 thru E10085072

My license renewal date for the state of Virginia is December 31, 2016.

Lumber design values are in accordance with ANSI/TPI 1 section 6.3
These truss designs rely on lumber values established by others.

December 12,2016

Lassiter, Frank

IMPORTANT NOTE: The seal on these truss component designs is a certification that the engineer named is licensed in the jurisdictions(s) identified and that the designs comply with ANSI/TPI 1. These designs are based upon parameters shown (e.g., loads, supports, dimensions, shapes and design codes), which were given to Trenco. Any project specific information included is for Trenco's customer's file reference purpose only, and was not taken into account in the preparation of these designs. Trenco has not independently verified the applicability of the design parameters or the designs for any particular building. Before use, the building designer should verify applicability of the design parameters and properly incorporate these designs into the overall building design per ANSI/TPI 1, Chapter 2.

Job	Truss	Truss Type	Qty	Ply	SAVANNAH W/ ROG & PART ATTIC	E10085072
25917	T-1	ROOF SPECIAL	9	1	Job Reference (optional)	

Structural Technologies, Doswell, VA 23047

7.640 s Apr 19 2016 MiTek Industries, Inc. Fri Dec 09 09:18:09 2016 Page 1
ID:hNjBGyXDZHd0w6QHrgvER7yQsfP-KehWsiRg4Quz4aaM6XsI0Byfa6ff6BQFbwAU9yAlhS

1-0-0	7-1-15	13-10-4	21-0-0	28-1-12	35-5-7	41-10-0	47-0-0	48-0-0
1-0-0	7-1-15	6-8-5	7-1-12	7-1-12	7-3-11	6-4-9	5-2-0	1-0-0

REPAIR TO REPLACE DAMAGED WEB SECTION.

Scale = 1:90.7

REMOVE DAMAGED TOP SECTION OF WEB (5-17) FOR A MINIMUM OF 48" (ALL OF THE DAMAGED LUMBER SECTION MUST BE REMOVED AND THERE MUST BE A MINIMUM OF 36" OF GOOD LUMBER REMAINING AT THE BOTTOM SECTION OF THE WEB AND THE PLATES AT JOINT 17 MUST REMAIN FULLY EMBEDDED AND INTACT).
REPLACE REMOVED SECTION WITH 2 X 4 SPF NO 2 MATERIAL.

*PREVIOUS REPAIR ON RIGHT END E9555866

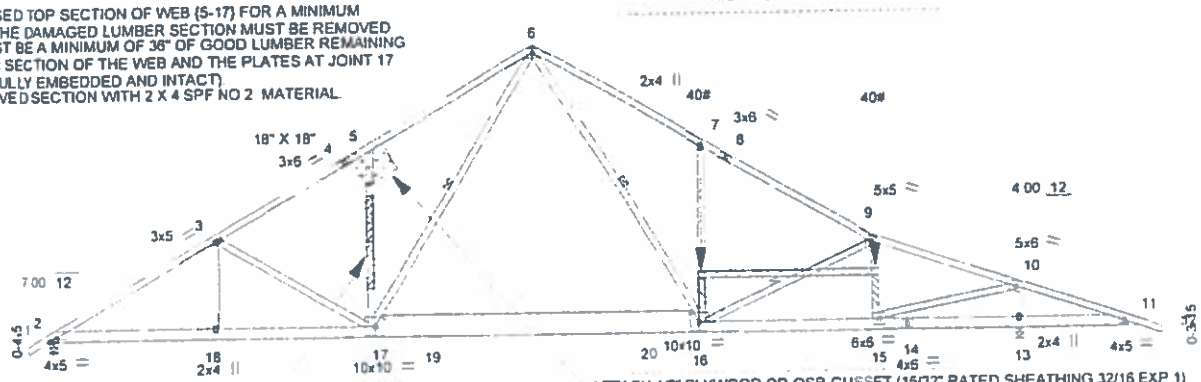

APPLY 2X4X4' SPF No 2 SCAB(S) TO EACH FACE OF TRUSS CENTERED ON SPLICE. ATTACH WITH 10d (3" X 0.131") NAILS PER THE FOLLOWING NAIL SCHEDULE
2 x 4's - 2 ROWS, 2 x 6'S AND LARGER - 3 ROWS SPACED @ 4" O.C.
STAGGER NAIL SPACING FROM FRONT FACE AND BACK FACE FOR A NET 2" O.C. SPACING IN THE TRUSS. USE 3" MEMBER END DISTANCE.

ATTACH 1/2" PLYWOOD OR OSB GUSSET (15/32" RATED SHEATHING 32/16 EXP 1) TO EACH FACE OF TRUSS WITH 10d (3" X .131") NAILS DRIVEN THROUGH BOTH SHEETS OF PLYWOOD AND CLINCHED PER THE FOLLOWING NAIL SCHEDULE
2 x 4's - 2 ROWS, 2 x 6'S AND LARGER - 3 ROWS SPACED @ 4" O.C.
NAILS TO BE DRIVEN FROM BOTH FACES. STAGGER SPACING FROM FRONT TO BACK FACE FOR A NET 2" O.C. SPACING IN THE TRUSS. USE 3" MEMBER END DISTANCE.

7-1-15	13-10-4	28-1-12	35-5-7	41-10-0	42-0-0	47-0-0
7-1-15	6-8-5	14-3-8	7-3-11	6-4-9	0-2-0	5-0-0

Plate Offsets (X,Y)-- [2:0-3-4,0-1-3], [16:0-4-12,0-5-0], [17:0-4-12,0-5-0]

LOADING (psf)		SPACING-	2-0-0	CSI.		DEFL.	in	(loc)	l/defl	L/d	PLATES	GRIP
TCLL	20.0	Plate Grip DOL	1.15	TC	0.98	Vert(LL)	-0.27	16-17	>999	240	MT20	244/190
TCDL	10.0	Lumber DOL	1.15	BC	0.76	Vert(TL)	-0.54	16-17	>918	180		
BCLL	0.0 *	Rep Stress Incr	YES	WB	0.76	Horz(TL)	0.09	13	n/a	n/a		
BCDL	10.0	Code IRC2009/TPI2007		(Matrix)							Weight: 336 lb	FT = 5%

LUMBER-
TOP CHORD 2x4 SP No.1 *Except* 9-12,1-4: 2x4 SP No.2
BOT CHORD 2x6 SP No.2 *Except* 16-17: 2x12 SP No.2
WEBS 2x4 SP No.3 *Except* 10-15: 2x4 SP No.2

BRACING-
TOP CHORD Sheathed
BOT CHORD Rigid ceiling directly applied or 6-0-0 oc bracing
WEBS 1 Row at midpt 6-17, 6-16, 9-16

REACTIONS. (lb/size) 2=1907/0-4-0, 13=2417/0-4-0
Max Horz 2=-300(LC 4)
Max Uplift 2=-241(LC 6), 13=-410(LC 7)

FORCES. (lb) - Maximum Compression/Maximum Tension
TOP CHORD 1-2=0/33, 2-3=-3219/394, 3-4=-2766/342, 4-5=-2584/378, 5-6=-2764/513, 6-7=-2759/496, 7-8=-2556/351, 8-9=-2755/327, 9-10=-2645/252, 10-11=-423/645, 11-12=0/22
BOT CHORD 2-18=-330/2681, 17-18=-331/2686, 17-19=-50/1632, 19-20=-50/1632, 16-20=-50/1632, 15-16=-167/2483, 14-15=-560/439, 13-14=-560/439, 11-13=-560/439
WEBS 3-18=0/340, 3-17=-468/159, 5-17=-436/214, 6-17=-268/1323, 6-16=-240/1304, 7-16=-487/238, 9-16=-281/79, 9-15=-805/201, 10-15=-553/3103, 10-13=-2187/487

NOTES-
1) Unbalanced roof live loads have been considered for this design.
2) Wind: ASCE 7-05; 90mph; TCDL=6.0psf; BCDL=3.0psf; h=25ft; Cat. II; Exp B; enclosed; MWFRS (low-rise); gable end zone and C-C Exterior(2) zone; cantilever left and right exposed ; end vertical left and right exposed;C-C for members and forces & MWFRS for reactions shown; Lumber DOL=1.15 plate grip DOL=1.15
3) This truss has been designed for a 20.0 psf bottom chord live load nonconcurrent with any other live loads.
4) * This truss has been designed for a live load of 20.0psf on the bottom chord in all areas where a rectangle 3-6-0 tall by 2-0-0 wide will fit between the bottom chord and any other members, with BCDL = 10.0psf.
5) Provide mechanical connection (by others) of truss to bearing plate capable of withstanding 241 lb uplift at joint 2 and 410 lb uplift at joint 13.
6) "Semi-rigid pitchbreaks with fixed heels" Member end fixity model was used in the analysis and design of this truss.
7) Hanger(s) or other connection device(s) shall be provided sufficient to support concentrated load(s) 40 lb down and 9 lb up at 28-1-12, and 40 lb down and 9 lb up at 35-7-10 on bottom chord. The design/selection of such connection device(s) is the responsibility of others.
8) In the LOAD CASE(S) section, loads applied to the face of the truss are noted as front (F) or back (B).

LOAD CASE(S) Standard
1) Dead + Roof Live (balanced) + Uninhab. Attic Storage: Lumber Increase=1.15, Plate Increase=1.15
Uniform Loads (plf)
Vert: 1-6=-60, 6-9=-60, 9-12=-60, 2-19=-20, 19-20=-60, 11-20=-20

December 12,2016

Continued on page 2

WARNING - Verify design parameters and READ NOTES ON THIS AND INCLUDED MITEK REFERENCE PAGE MII-7473 rev. 10/03/2015 BEFORE USE.
Design valid for use only with MiTek® connectors. This design is based only upon parameters shown, and is for an individual building component, not a truss system. Before use, the building designer must verify the applicability of design parameters and properly incorporate this design into the overall building design. Bracing indicated is to prevent buckling of individual truss web and/or chord members only. Additional temporary and permanent bracing is always required for stability and to prevent collapse with possible personal injury and property damage. For general guidance regarding the fabrication, storage, delivery, erection and bracing of trusses and truss systems, see ANSI/TPI1 Quality Criteria, DSB-89 and BCSI Building Component Safety Information, available from Truss Plate Institute, 218 N. Lee Street, Suite 312, Alexandria, VA 22314.

ENGINEERING BY TRENCO
A MiTek Affiliate
818 Soundside Road
Edenton, NC 27932

LOAD CASE(S) Standard

Concentrated Loads (lb)

Vert: 16=-40(F) 15=-40(F)

WARNING - Verify design parameters and READ NOTES ON THIS AND INCLUDED MITEK REFERENCE PAGE MII-7473 rev. 10/03/2015 BEFORE USE.
Design valid for use only with MiTek® connectors. This design is based only upon parameters shown, and is for an individual building component, not a truss system. Before use, the building designer must verify the applicability of design parameters and properly incorporate this design into the overall building design. Bracing indicated is to prevent buckling of individual truss web and/or chord members only. Additional temporary and permanent bracing is always required for stability and to prevent collapse with possible personal injury and property damage. For general guidance regarding the fabrication, storage, delivery, erection and bracing of trusses and truss systems, see ANSI/TPI1 Quality Criteria, DSB-89 and BCSI Building Component Safety Information available from Truss Plate Institute, 218 N. Lee Street, Suite 312, Alexandria, VA 22314.

ENGINEERING BY TRENCO A MiTek Affiliate
818 Soundside Road
Edenton, NC 27932

Symbols

PLATE LOCATION AND ORIENTATION

Center plate on joint unless x, y offsets are indicated. Dimensions are in ft-in-sixteenths. Apply plates to both sides of truss and fully embed teeth.

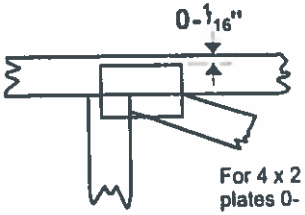

For 4 x 2 orientation, locate plates 0- 1/16" from outside edge of truss.

This symbol indicates the required direction of slots in connector plates.

*** Plate location details available in MiTek 20/20 software or upon request.**

PLATE SIZE

4 x 4

The first dimension is the plate width measured perpendicular to slots. Second dimension is the length parallel to slots.

LATERAL BRACING LOCATION

Indicated by symbol shown and/or by text in the bracing section of the output. Use T or I bracing if indicated.

BEARING

Indicates location where bearings (supports) occur. Icons vary but reaction section indicates joint number where bearings occur. Min size shown is for crushing only.

Industry Standards:

ANSI/TPI1: National Design Specification for Metal Plate Connected Wood Truss Construction.
DSB-89: Design Standard for Bracing.
BCSI: Building Component Safety Information, Guide to Good Practice for Handling, Installing & Bracing of Metal Plate Connected Wood Trusses.

Numbering System

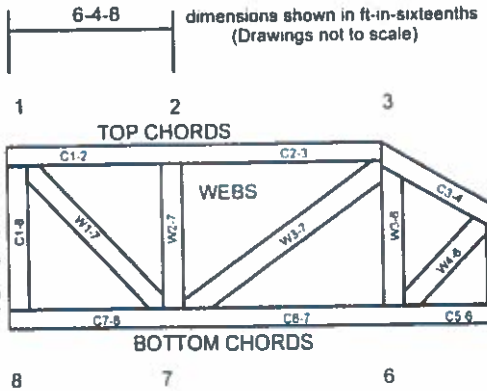

JOINTS ARE GENERALLY NUMBERED/LETTERED CLOCKWISE AROUND THE TRUSS STARTING AT THE JOINT FARTHEST TO THE LEFT.

CHORDS AND WEBS ARE IDENTIFIED BY END JOINT NUMBERS/LETTERS.

PRODUCT CODE APPROVALS

ICC-ES Reports:

ESR-1311, ESR-1352, ESR1988
ER-3907, ESR-2362, ESR-1397, ESR-3282

Trusses are designed for wind loads in the plane of the truss unless otherwise shown.

Lumber design values are in accordance with ANSI/TPI 1 section 6.3 These truss designs rely on lumber values established by others.

© 2012 MiTek® All Rights Reserved

MiTek

TRENCO

General Safety Notes

Failure to Follow Could Cause Property Damage or Personal Injury

1. Additional stability bracing for truss system, e.g. diagonal or X-bracing, is always required. See BCSI.
2. Truss bracing must be designed by an engineer. For wide truss spacing, individual lateral braces themselves may require bracing, or alternative Tor I bracing should be considered.
3. Never exceed the design loading shown and never stack materials on inadequately braced trusses.
4. Provide copies of this truss design to the building designer, erection supervisor, property owner and all other interested parties.
5. Cut members to bear tightly against each other.
6. Place plates on each face of truss at each joint and embed fully. Knots and wane at joint locations are regulated by ANSI/TPI 1.
7. Design assumes trusses will be suitably protected from the environment in accord with ANSI/TPI 1.
8. Unless otherwise noted, moisture content of lumber shall not exceed 19% at time of fabrication.
9. Unless expressly noted, this design is not applicable for use with fire retardant, preservative treated, or green lumber.
10. Camber is a non-structural consideration and is the responsibility of truss fabricator. General practice is to camber for dead load deflection.
11. Plate type, size, orientation and location dimensions indicated are minimum plating requirements.
12. Lumber used shall be of the species and size, and in all respects, equal to or better than that specified.
13. Top chords must be sheathed or purlins provided at spacing indicated on design.
14. Bottom chords require lateral bracing at 10 ft. spacing, or less, if no ceiling is installed, unless otherwise noted.
15. Connections not shown are the responsibility of others.
16. Do not cut or alter truss member or plate without prior approval of an engineer.
17. Install and load vertically unless indicated otherwise.
18. Use of green or treated lumber may pose unacceptable environmental, health or performance risks. Consult with project engineer before use.
19. Review all portions of this design (front, back, words and pictures) before use. Reviewing pictures alone is not sufficient.
20. Design assumes manufacture in accordance with ANSI/TPI 1 Quality Criteria.

Gmail

Leah Thorpe <leahbthorpe@gmail.com>

Repair Drawings

1 message

Leah Thorpe <leahbthorpe@gmail.com> Thu, Jun 23, 2016 at 4:31 PM
To: flassiter@mii.com

Good Afternoon Mr. Lassiter:

I am so sorry to bother you again but Finer Homes sent us the attached repair drawings for the padding up of the trusses to me Tuesday and I wanted to get your opinion on them. The "repair" is exactly what they did. I have tried to contact James Fletcher but the phone for his business is no longer in service. Thank you and again, I apologize for bothering you again.

Respectfully,

Leah Thorpe

P.S. I have also attached our original drawings and the repair drawing for the HVAC platform that you did.

3 attachments

FLETCHER REPAIR.pdf
588K

HVAC REPAIR DRAWING.pdf
133K

ORIGINAL TRUSS DRAWINGS.pdf
2362K

Gmail

Leah Thorpe <leahbthorpe@gmail.com>

HELP NEEDED-TRUSS REPAIR DRAWING

1 message

Leah Thorpe <leah_thorpe@ccpsnet.net> Wed, Oct 19, 2016 at 11:00 AM
To: Frank Lassiter <flassiter@mii.com>
Cc: ghthorpe@yahoo.com
Bcc: leahbthorpe@gmail.com

Good Morning Mr. Lassiter:

You were kind enough to talk to me on June 1, 2016 when I called you about a concern about how our builder had padded up the bottom chord of our trusses and installed an HVAC platform. I sent you a picture of the padded up trusses, the HVAC platform, and also the original truss drawings. You emailed me back on June 2nd and said to have Structural Technologies issue repair drawings for the padded up trusses and HVAC platform. Our builder also cut the gable wall to put a window in and then did not brace it properly. I did not know of this defect at the time.

To make a long and frustrating story short; our builder did give us a repair drawing prepared by you for the HVAC platform, he gave us the attached repair for the gable wall, and gave us an "as built" drawing of the padded up trusses and found a PE that would stamp it. I called the company that the builder told me Mr. Fletcher owned and the number is no longer in service and there is no way to get in touch with him. The Building Official has deemed Mr. Fletcher's "drawing" as sufficient evidence that the method of construction is acceptable even though I told them that you said to issue a repair drawing when you saw the picture. I know Mr. Fletcher's drawing is not acceptable and I have filed a complaint against him with DPOR which is still in progress.

I have appealed the Building Officials decision and I have to go before a board and plead my case. I was wondering if you could tell me why you advised that a repair drawing should be issued? I think if I could give them precise details of why it should not be constructed the way that it was that I will have more luck in getting them to reverse the Building Officials decision. If it turns out that we are not successful in reversing the decision of the Building Official, my husband and I would like to know how much you would charge for the repair drawing and we will just have it done ourselves.

I have attached pictures and drawings for your reference.

I know you are a busy man and I would truly appreciate any help you could give me. I understand completely if there are charges for the information I am requesting. My husband and I would be more than willing to drive to North Carolina to meet with you if that would be helpful. We are very frustrated and anxious to get our home repaired and put this issue behind us. Thank you again.

Respectfully,

Leah Thorpe
16300 Longlands Road
Chesterfield, VA 23832
804-218-8493

8 attachments

TRUSS MODIFICATION 4-23-15 1.jpg
1756K

GABLE WALL.jpg
797K

GABLE WALL 2.jpg
744K

MYSTERY REPAIR.jpg
931K

TRUSS DESIGN DRAWINGS.pdf
2362K

HVAC REPAIR DRAWING.pdf
133K

Gable wall, I joist, Break in foundation wall repair.pdf
828K

FLETCHER REPAIR.pdf
588K

Bottom Chord Live Load

- Attics With Storage
  - Access by fixed stairs
  - 30-psf concurrent live load
- Attics With Limited Storage
  - Access only by scuttle opening or pull-down stairs
  - 42" clear height between bottom chord and web or top chord for a distance of 24"
  - 20-psf concurrent live load
- Attics Without Storage
  - 10-psf non-concurrent live load

Your "Everything" Team...
ITWBCG
ITW Building Components Group Inc.
...we're there for you!

Bottom Chord Live Load

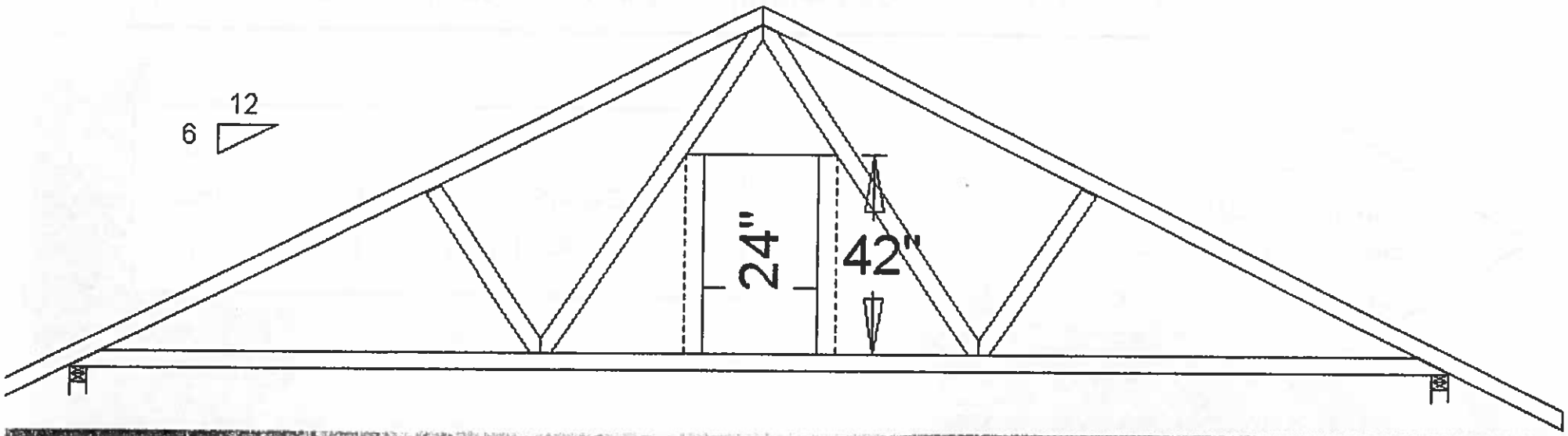

- Live load often referred to as BOCA load
- Origin is in National Building Code (BOCA)
- Requires minimum clearance of 42" and minimum width of 24"
- Bottom chord pitch less than 2:12
- Concurrent with roof live load

Your "Everything" Team...
ITWBCG
ITW Building Components Group Inc.
...we're there for you!

Truss Bottom Chord Load Flow Chart per IRC 2006 for Attics

Served by fixed stair?

Yes

Use 30 psf live load for habitable attics and sleeping areas.

No

Minimum clearance 42" x 24"?

Yes

Use 20 psf live load for attics w/ limited storage in truss areas where clearance meets minimum requirements.

No

Two or more adjacent trusses with similar webbing

No

Use 10 psf minimum live load for attics w/o storage

Your "Everything" Team...

ITWBCG

ITW Building Components Group Inc.

...we're there for you!

Gregory H. Thorpe
Leah B. Thorpe

Appeal No. 16-11
Thorpes Position on Appeal Items:

Compliance Times:

Relief Sought by Thorpes:

We would like the State to rule as to whether or not the building official has the flexibility to randomly set compliance times for sited code violations. Based on the 1995 Circuit Court decision in Chesterfield County v. Karnos (attached) it seems that allowing the building official to change compliance times at will would be allowing them to pursue building code violations in its own informal way.

BUILDING OFFICIALS STATEMENTS REGARDING THIS ISSUE:

1. Building Official Rick Witt's statement/decision regarding compliance times (excerpt from the 9-30-16 e-mail to Thorpes):

Compliance times:

The compliance times were increased due to our understanding that you required a several weeks of notice before Finer Homes can come onsite and correct the violations. We would be happy to facilitate a quicker response from Finer Homes based on your availability to allow them onsite.*

* This was based on one email that was part of 10 emails exchanged between us and a Finer Homes customer service representative. All of the emails are attached. Also, Mr. Witt never bothered to verify with us if this statement was correct.

2. **Chesterfield BI interpretation of Codes 115.2 presented at Thorpe Appeal Hearing before LBBCA on November 30, 2016:**

Compliance times:
The compliance times were increased due to our understanding that you required a several weeks of notice before Finer Homes can come onsite and correct the violations. We would be happy to facilitate a quicker response from Finer Homes based on your availability to allow them onsite.

Section 115.2 Notice of violation. The building official ***shall*** issue a written notice of violation to the responsible party if any violations of this code or any directives or orders of the building official have not been corrected or complied with in a reasonable time. The notice shall reference the code section upon which the notice is based and direct the discontinuance and abatement of the violation or the compliance with such directive or order. The notice shall be issued by either delivering a copy to the responsible party by mail to the last known address or delivering the notice in person or by leaving it in the possession of any person in charge of the premises, or by posting the notice in a conspicuous place if the person in charge of the premises cannot be found. The notice of violation shall indicate the right of appeal by referencing the appeals section. When the owner of the building or structure, or the permit holder for the construction in question, or the tenants of such building or structure, are not the responsible party to whom the notice of violation is issued, then a copy of the notice shall also be delivered to the such owner, permit holder or tenants.

Chesterfield BI Interpretation:
The building official has the flexibility to set compliance times. Specific compliance times are not mandated in the code.

3. **Chesterfield County Responses to Relief Sought Issues, January 17, 2017**

Relief Sought:
Rule that the building official does not have authority to set compliance times.

Chesterfield BI Position:
The building official has the flexibility to set compliance times. Specific compliance times for correcting code violations are not mandated in the code. USBC Section 115.2 Notice of Violation does not address compliance times. USBC Section 115.3 Further action when violation not corrected does not stipulate the timeframe required before the building official must seek legal action from the legal counsel of the locality. The timeframes are at the discretion of the building official.

Section 115.3 Further action when violation not corrected. If the responsible party has not complied with the notice of violation, the building official ***shall*** submit a written request to the legal counsel of the locality to institute the appropriate legal proceedings to restrain, correct or abate the violation or to require the removal or termination of the use of the building or structure involved. In cases where the locality so authorizes, the building official may issue or obtain a summons or warrant. Compliance with a notice of violation notwithstanding, the building official may request legal proceedings be instituted for prosecution when a person, firm or corporation is served with three or more notices of violation within one calendar year for failure to obtain a required construction permit prior to commencement of work subject to this code.

Thorpes Position:

In the court case Chesterfield County v. Karnos, the circuit court ruled that the word ***shall*** in Uniform Statewide Building Code should be interpreted as mandatory rather than permissive and ordered the building official must issue a notice of violation rather than take an informal approach. It would be a reasonable to infer that the Circuit Court ruling would also apply to the word ***shall*** in 115.3.

Mr. Witt stated that the extended compliance time was granted "due to our understanding that you required a several weeks of notice before Finer Homes can come onsite and correct the violations. We would be happy to facilitate a quicker response from Finer Homes based on your availability to allow them onsite" however he never bothered to verify that information. I have attached a list of all of the times that we have taken off work to make ourselves available to Finer Homes or their contractors to meet about repairs or make repairs to our home. The list is not complete because we have not had the time to update it but it is safe to say that at least 10 additional visits can be added. For most of these meeting or repairs we were given only a few days notice at most. We have always made ourselves available because Finer Homes refused to be flexible and we wanted to get the repairs done. Mr. Witt could not have been more wrong then to accuse us of not being available when Finer Homes wanted to make repairs.

I sent an email to William Dupler, Richard Witt, and Ron Clements on 11/27/16 (attached) requesting that a Letter of Violation be sent to Finer Homes in follow-up to the Letter of Defect that was sent to them on September 16, 2016 because none of the items on the Letter of Defect had been fixed. Mr. Clements replied to me on 11/29/16 at 3:10 p.m. that "Mr. Holt thought that he had to wait until the appeal case was complete to apply for the permit to begin work. We informed him that was not the case

ınd to apply for the permit today or tomorrow and reach out to you to schedule times o perform the work".

saw on the Chesterfield county website that Finer Homes had been issued a permit for he repairs at our address on 11/29/16 at 11:54 a.m. We feel like BI was just giving us a alse excuse as to why we had not even heard from Finer Homes when they sent us an :mail saying Mr. Holt thought he had to wait to apply for the permit when it had been ssued 3 hours earlier.

Mr. Clements also included his notes from a meeting on 11/14/16 that Mr. Dupler set ıp between Finer Homes and us to try to come to an agreement about the building ode violations. Mr. Clements and Mr. Witt were also present at this meeting. Mr. Holt was very compliant at this meeting which was in stark contrast to the experience ve had with him since we closed on our house. He stated in that meeting that our lriveway would be fixed on the "next decent day". In the fifteen days between 11/14/16 ınd 11/29/16 we had a total of 1.5 inches of rain and Finer Homes poured the driveway, idewalk and patio of the house they were building right next door to us and yet we ıeard nothing from them.

When we had our hearing on 11/30/16 we asked again if the Letter of Violation and Summons were going to be issued and we were told no, the county's goal is compliance.

n our opinion Chesterfield county BI broke the law when they refused to send Finer Homes a Letter of Violation when they were given an extended time frame of sixty and till did not fix the listed violations.

The driveway was not repaired until December 27, 2016 making it 43 days from the ime Mr. Holt assured us it would be done on "the next decent day".

Chesterfield county BI missed close to 34 code violations in our home (list attached). When we found the violations and reported them it seemed that everyone we talked to n the county was more interested in "holding the builders hand" than advocating for ıs. They continually stalled in issuing written citations of the violations, made excuses or the builder, and spent an enormous amount of time "helping" the builder get these iolations fixed. Finer Homes has been in business for over 30 years. One would think hat they were very familiar with the home building process and would not need to be walked through" the process of fixing code violations.

n addition, we are still finding significant code violations. On December 9, 2016 the supervisor for mechanical inspectors was at our house because in order to fix the 58 in span of unsupported foundation on a load bearing wall, the HVAC system had to be emoved. He was there to inspect and make sure it was re-installed properly. My ıusband told him that there was a lot of dust in the house and could he look and see if ıe could find anything with the HVAC system that might be causing it. He reported hat he did not see any problems with the system. The next day my husband and I both vent under the house to check on the repairs that were done and discovered that the

Therma Pan that was used to construct the return duct had gaps in it every 2 to 3 feet and the main trunk line was hanging from the Therma Pan by strands of glue. The Therma Pan was not installed correctly and it did not have a sufficient insulation value for the crawl space. We are perplexed as to how the supervisor could have missed that when he was asked to specifically look for problems with the system. We have had 4 estimates done for the repair of this problem and every one of the contractors has come out from under our house shaking their head about the way our duct system is installed. This is another item that Chesterfield BI did not catch. The duct is too small, it is kinked in many areas, and the main supply line is resting on earth. All of these are code violations.

We have totally lost confidence in Chesterfield County BI and are totally perplexed with the manner in which they operate. It is very obvious that Finer Homes has no respect for their authority. In the 157 days between August 3, 2016 and December 9, 2016 Finer Homes received 2 Letter's of Defect and 1 Letter of Violation regarding 9 code violations. During that time span they replaced the bath tub and had the electrical contractor come out and put a piece of tape over the hole they left in the exhaust fan duct work.

We appealed the compliance time issue because we believe that if builders knew that the county was mandated to adhere to specific compliance times, other home owners will not have to go through what we did. If builders know the county is going to "hold their hand" through the process, they have no incentive to establish procedures in their building process to avoid violations, or to fix violations in a timely manner. We also appealed the compliance time issue because we are concerned that there is a major problem with how Chesterfield BI operates if they miss as many code violations as they missed, and continue to miss on our home. It seems obvious to us that mandated procedures should be implemented to eliminate any suggestion of conflict of interest.

25. ***Chesterfield County v. Karnos*, 36 Va. Cir. 86 (1995).**

hesterfield County's Board of Building Code ppeals (BBCA) ruled that a local building ıspector had to issue a notice of violation on a uilder. The County appealed the BBCA decision › the State Building Code Technical Review oard, which upheld the determination. The ounty then appealed to the Circuit Court.

he circuit court ruled that Chesterfield County ıcked standing to appeal, as not being an ggrieved person within VA. CODE ANN. §9- .14:16. The County's concern about not being ɔle to pursue building code violations in its own ıformal way was held not a legally sufficient ggrieved concern. The circuit court also ruled ıat the Technical Review Board decision was ɔrrect. The court interpreted the term "shall" in 112.2 of the Uniform Statewide Building Code s mandatory rather than permissive, and held ıat the building official must issue a notice of

Gmail

Leah Thorpe <leahbthorpe@gmail.com>

Compliance Time

Concrete

Leah Thorpe <leahbthorpe@gmail.com> Sun, Aug 28, 2016 at 3:56 PM
To: Nick Woodard <nwoodard@finerhomesinc.net>
Cc: Greg Thorpe <ghthorpe@yahoo.com>, gholt@finerhomesinc.net, "Kindervater, William" <kindervaterw@chesterfield.gov>

Nick:

I just called and left a message on his cell phone that Greg would be here at 11:00 tomorrow morning and if he could not make it to please call Greg.

Leah Thorpe
[Quoted text hidden]

Gmail

Leah Thorpe <leahbthorpe@gmail.com>

Concrete

Nick Woodard <nwoodard@finerhomesinc.net> Sun, Aug 28, 2016 at 3:51 PM
To: Leah Thorpe <leahbthorpe@gmail.com>

Yes Jeff is the one meeting.
(804) 640-8055 is what I have for Jeff.

Nick Woodard
Customer Service Supervisor
804-920-1966
Finer Homes Inc.
[Quoted text hidden]

Gmail

Leah Thorpe <leahbthorpe@gmail.com>

Concrete

Leah Thorpe <leahbthorpe@gmail.com> Sun, Aug 28, 2016 at 3:15 PM
To: Nick Woodard <nwoodard@finerhomesinc.net>
Cc: Greg Thorpe <ghthorpe@yahoo.com>, gholt@finerhomesinc.net, "Kindervater, William" <kindervaterw@chesterfield.gov>

Nick:

I just spoke to Bob Garlitz and he is on vacation next week and had no idea what I was talking about when I asked him if tomorrow at 11:00 a.m. was still convenient for him. He said that maybe Jeff Coates was the one who was coming out. The number I have for Jeff Coates - 804-640-8056 is not working so if you could provide me with a working number I will call him to verify that he can be here. I left a message with Mr. Kindervator and will also call him first thing in the morning to verify the 11:00 a.m. appointment.

Greg will be here at 11:00 a.m. tomorrow morning.

Leah Thorpe
[Quoted text hidden]

Gmail

Leah Thorpe <leahbthorpe@gmail.com>

Concrete

Nick Woodard <nwoodard@finerhomesinc.net> Sun, Aug 28, 2016 at 2:28 PM
To: Leah Thorpe <leahbthorpe@gmail.com>

I left a message with everyone canceling tomorrow's appointment after your last email. I left a message again today to try and get it back on the schedule. Hopefully everyone is enjoying there weekend and didn't get yesterday's message and will get both messages at the same time.

I gave the plumbers all your contact info to schedule as I do everyone else. The heard it was a gas leak and came right over as the consider something like that an emergency that needs fixed pronto. That's why they just showed up. You have a contact list for the contractors. Certainly things like a gas leak you should call them directly to get resolve as soon as possible.

You will probably want to get Columbia gas to meet them out there and show them the leak, the plumbers could not find anything leaking anywhere. I'm shocked that someone from the gas company would find a leak and not turn the gas off at the meter and put a lock on it. I've never seen them find a leak and tell a homeowner just to get it fixed. Definitely will want to have them show the plumber where there is a leak.

Nick Woodard
Customer Service Supervisor
804-920-1966
Finer Homes Inc.

On Aug 28, 2016, at 12:19 PM, "Leah Thorpe" <leahbthorpe@gmail.com> wrote:

Gmail

Leah Thorpe <leahbthorpe@gmail.com>

Concrete

Leah Thorpe <leahbthorpe@gmail.com> Sun, Aug 28, 2016 at 12:32 PM
To: Nick Woodard <nwoodard@finerhomesinc.net>
Cc: gholt@finerhomesinc.net, "Kindervater, William" <kindervaterw@chesterfield.gov>, Greg Thorpe <ghthorpe@yahoo.com>

Nick:

I accidentally sent the email you just received before I was finished.

3. In our contract with Finer Homes we are required to give any sub contractor that we call to come to our home a two week time span to fit us in to their schedule and if we have to cancel that appointment we have to give them 24 hours notice. It seems only fair that Finer Homes should have to abide by the requirements that they impose on the homeowner.

We do not feel that expecting Finer Homes to give us sufficient notice of appointment times unreasonable. We have been more than accommodating during this past year in the scheduling process. We are bending over backwards to accommodate Finer Homes when it should be the other way around.

We will be expecting to see you, Mr. Kindervator and Mr. Garlitz at our house tomorrow at 11:00 a.m. Please e-mail Greg and I if you can not keep this appointment.

Leah Thorpe
[Quoted text hidden]

Gmail

Leah Thorpe <leahbthorpe@gmail.com>

Concrete

Leah Thorpe <leahbthorpe@gmail.com> Sun, Aug 28, 2016 at 12:19 PM
To: Nick Woodard <nwoodard@finerhomesinc.net>
Cc: gholt@finerhomesinc.net, "Kindervater, William" <kindervaterw@chesterfield.gov>

Nick:

Greg has gone in to work today so that he can be here tomorrow at 11:00. Please be on time to minimize the hours that Greg will be away from the office.

I would also like to clarify why we do not want Finer Homes or anyone that is working for or with Finer Homes on our property without us being present.

1. When the plumber came last week to fix the gas leak and we were not at home it did not give us the opportunity to see exactly what he did. He told Greg that there was no gas leak, but on August 19th Columbia Gas was here and showed Greg that there was a gas leak. We have documentation Commonwealth Plumbing did not make an appointment, have Greg accompany him to the gas hook up, and test for a leak in front of him. So now all we know is what Commonwealth Plumbing told Greg, and what Columbia Gas showed him. When a sub contractor is working on anything on our house we want to see exactly what they are doing and how they are doing it.

2. When the sub floor was being replaced and one on the workman went through Greg's tools without asking permission you had a very nonchalant attitude about it. In fact you told Greg "he was just looking for a knife" as if to say that it was perfectly okay for him to go through our personal possessions. As you know, after everyone left Greg did discover that his utility knife was missing. We don't feel comfortable having someone who obviously has no regard for our home or personal possessions on our property without us being present.

Gmail

Leah Thorpe <leahbthorpe@gmail.com>

Concrete

Leah Thorpe <leahbthorpe@gmail.com> Sat, Aug 27, 2016 at 4:19 PM
To: Nick Woodard <nwoodard@finerhomesinc.net>

We do want you to look at it but we can not be home Monday at 11:00. Can Mr Garlitz and Mr Kindervater meet on Friday or early in the morning on any other day. We did not get your email until Friday afternoon which did not give us enough time to rearrange our schedule.

Leah Thorpe

[Quoted text hidden]

Gmail

Leah Thorpe <leahbthorpe@gmail.com>

Concrete

Nick Woodard <nwoodard@finerhomesinc.net> Sat, Aug 27, 2016 at 12:04 PM
To: Leah Thorpe <leahbthorpe@gmail.com>

Mr kindervater wants to look at it with Garlitz and finer to discuss the issues and resolve.

Monday at 11 is when he and Garlitz are available. So you do not want us to look at this Monday?

Nick Woodard
Customer Service Supervisor
304-920-1966
Finer Homes Inc.
[Quoted text hidden]

Subject: Re: Concrete

From: Leah Thorpe (leahbthorpe@gmail.com)

To: nwoodard@finerhomesinc.net;

Cc: ghthorpe@yahoo.com;

Date: Saturday, August 27, 2016 11:58 AM

Nick

Monday will not work for Greg and I. Please try to schedule any sub contractors coming in either first thing in the morning or on a Friday.

What exactly do Bob Garlitz and Mr Kindervater want to look at? Both of them have been to our house at least 2 times and seen the problem. Mr. Kindervater also has several pictures of the drainage problem on the driveway and told me himself that the driveway did not meet code because it did not have a 2% slope away from the house.

Also, just as a reminder, Greg and I do not give our permission for Finer Homes or anyone working for Finer Homes or any building inspectors to be on our property without our permission and making an appointment.

Leah Thorpe

Subject: Concrete

From: Nick Woodard (nwoodard@finerhomesinc.net)

To: leahbthorpe@gmail.com; ghthorpe@yahoo.com;

Date: Friday, August 26, 2016 2:17 PM

We have spoken to mr kindervater and Garlitz and both are available to meet Monday at 11am at your house to inspect the driveway. Just want to make sure you guys are okay with us taking a look Monday.

Nick Woodard
Customer Service Supervisor
804-920-1966
Finer Homes Inc.

Gmail

Leah Thorpe <leahbthorpe@gmail.com>

Finer Homes Code Violations-Thorpe Residence

6 messages

Leah Thorpe <leahbthorpe@gmail.com> Sun, Nov 27, 2016 at 7:22 PM
To: DuplerB@chesterfield.gov, wittr@chesterfield.gov, clementsro@chesterfield.gov
Cc: CaseyJoe@chesterfield.gov
Bcc: Greg Thorpe <ghthorpe@yahoo.com>, Leah Thorpe <leahbthorpe@gmail.com>

Mr. Dupler, Mr. Witt, and Mr. Clements:

Thank you for taking the time to meet with us on Monday 11/14/16. We appreciate your efforts in facilitating the meeting with Finer Homes. Mr. Holt has shown no interest in meeting with us since we closed on the house on June 30, 2015 and his cooperative attitude on Monday night was in stark contrast to the many email's we have exchanged in the past 17 months in which he has refused to address building code defects properly.

We have not received any Information in two weeks regarding the repair drawing for the padded up trusses from Frank Lassiter. Has anyone contacted him for his repair drawing? Has James Fletcher been located?

What is the status of the foundation and joist repair that was discussed on 11/21/16? When can we expect the repair drawings for these items to be completed and repairs to begin?

In our meeting we agreed that one section of the driveway would be torn out and re-poured so that the water drained away from the house. It was understood that if this did not fix the problem then more sections would have to be torn out and re-poured. This was going to be done "on the next decent day". We have had no rain since 11/15/16, and temperatures have only been below freezing on three nights since our meeting.

I am sure that you all know that the clock is ticking and it will not be long until our option to take further action to ensure that Finer Homes will fix the building code violations on our home will expire. We do not intend to wait in hopeful anticipation for Finer Homes to do the right thing only to find ourselves with no options left. It only took them 91 days to build our home. They have had ample time to fix the code violations which they were notified of in an August 3, 2016 Letter of Defect, a September 16, 2016 Letter of Violation, and a September 16, 2016 Letter of Defect.

We have our appeal meeting tomorrow night to appeal the building officials decision on the driveway drainage, the floor joist, the truss alteration to build up the bottom chord depth, and the extended compliance times. It would be helpful to have an update and also have the items we agreed to on November 14th in writing.

We are requesting that The Department of Building Inspections, as required by law, issue a Letter of Violation for the violations that Finer Homes was notified of in your Letter of Defec dated September 16, 2016. We also request that a summons be issued for the code

violations that Finer Homes was notified of in a Letter of Defect dated August 3, 2016, and a Letter of Violation dated September 16, 2016. The sixty day compliance time has expired for both of these notifications.

Again, we appreciate that you are spending a lot of time on this matter and the meeting on Monday night seemed to be mostly positive. However, taking into account what Finer Homes has actually done and not done in the past 17 months we don't feel that it would be in our best interest to just sit and continue to wait for them to actually do the things that Mr. Holt said he would do in our meeting on Monday.

Sincerely,

Greg and Leah Thorpe

Clements, Ron <ClementsRo@chesterfield.gov> Tue, Nov 29, 2016 at 3:10 PM
To: Leah Thorpe <leahbthorpe@gmail.com>, "Dupler, Bill" <DuplerB@chesterfield.gov>, "Witt, Rick" <WittR@chesterfield.gov>
Cc: "Casey, Joe" <CaseyJoe@chesterfield.gov>, "Greg Holt (gholt@finerhomesinc.net)" <gholt@finerhomesinc.net>, "Davis, Chris" <DavisCh@chesterfield.gov>

Mrs. Thorpe:

Attached are my notes from our meeting on 11-14-16 and where things stand from our perspective. We spoke with Mr. Holt today and he was under the impression that he needed to wait until the appeal case was completed to apply for the permit or begin the work. We informed him that that was not the case and to apply for the permit today or tomorrow and reach out to you to schedule times to perform the work. Mr. Holt also stated that the designs from Mr. Toney were complete and they will be submitted with the permit application.

Cordially,

Ron

Ron Clements | Assistant Director

Chesterfield Building Inspection Department

Safe construction from the ground up

(804) 751-4163 | www.chesterfield.gov/bi/

7-15-15

7-17-15 Speeks - insulation needed

8-5-15 - RO - Squeaky MB floor, tears, Kitchen floor

RO - Came to repair cabinets

8-7-15 - RO - Vanity drawer fronts

8-28-15 - RO supposed to come / did not show

0-29-15 - Nick - 8:20 - Rick - Granite scratch

8:45 Speeks - low freon / improper install

00 Rick - RO - Mineral spirits BR floor / Squeky HW floor

1-5-15 - Bathworks

1-16-15 - RO - Rick - HW floors - put in claim w/ manf. rep

2-11-15 - HW Rep (salesman) / Rep said squeaky floor install prob.

3-10-16 - Nick - HW Floor

Stockners - moved sprinkler heads

-16 - 9:15 Floor installers arrived. Thinger "did you have water damage"

3-26-16 - 8:00 - Floor installers

-30-16 - Siding / scheduled 9-10 arrived @ 10:49

-31-16 - Garlitz / RO - restrech carpet

-29-16 - Tile & Shelf repair & replace

Stockners - No show

1-4-16 - Two doors delivered

1-15-16 - RO - ~~replaced~~ fixed damage from install

-22-16 - Apple Door / Stockner - rescheduled

5-6-16 - Speeks / RO / Stockners

-13-16 - Insulators / Apple

6-16 - Speeks - Thermostat IRD
27-16 - Stockners
1-16 - Allan Simmons
16 - Hardwood delivered
-16 - Repair Oven bottom drawer
3-16 - HW removal / Subfloor replace
8-16 - Kevin Burcher / City Inspector / Tub
16 - HW install
Speeks - downstairs compressor
not wrkg
1-16 - Speeks / Mikes Roofing
-16 - Tub replacement
1-16 - Tile - cancelled by Nick
2-16 - Tile replacement
3-16 - Fixtures on tub
29-16 - Kinderwater / Nick / Jeff Driveway Coasters
2-16 - CR Phillips
7-16 - Speeks / Pro Inspectors
13-16 - Pro Inspectors

CODE VIOLATIONS

1. Duct work return material not installed properly
2. Duct work return material does not have the proper R value
3. Supply duct kinked in crawl space
4. Supply duct undersized
5. Supply duct kinked in attic
6. Return duct undersized
7. D Manuel calculation for duct work not done
8. Bath tub not installed to manufacturer's instructions.
9. Missing insulation in crawl
10. Crawl space penetrations not sealed
11. Trash and building materials under vapor barrier in crawl space.
12. Missing vapor barrier in crawl space
13. Split vertical truss chord - Structural
14. Cut joist under tub. Repair done without contacting supplier and now the suppliers warranty is void. - Structural
15. Driveway not sloped to code- - water getting in garage
16. Coil set has tears in insulation
17. Wire penetrations through sub-floor not sealed.
18. Power cable routed through return plenum
19. Gable truss needs reinforcing - Structural
20. 58 inch unsupported penetration in foundation on a bearing wall for HVAC duct -Structural
21. Large subfloor hole under tub
22. Heat pump upstairs-platform put in trusses - Structural
23. Gutter leaking left side above meter (improper shingle install)
24. Outside spigots not mounted properly
25. Thermostat cable run through return plenum
26. Gas line draped over dryer duct.
27. Exterior door bent. Not sealing @top (I fixed-replaced door)
28. Door to garage and door from garage to house cracked – not installed per manufacturer's instructions. (Finer supplied new doors, Greg Thorpe painted and installed them))
29. Hole in master bath vent duct
30. Gas leak at meter on contractor side
31. Stove installed improperly
32. HVAC duct work installed improperly
33. Stove installed improperly
34. Dishwasher installed improperly
35. Supply duct laying on earth.

STATEMENT OF RELIEF SOUGHT

Driveway Drainage:
The builder has replaced one section of the driveway to try to alleviate the problem of water getting into the garage. The slope does not meet the code standard but we agreed that if it alleviated the problem we would be satisfied. The builder has also agreed that if it does not alleviate the problem then he will replace the entire driveway if he has to. We would like to have the State's interpretation of this code as we feel that the County is wrong when they say "the builder can do whatever he/she wants beyond 10 feet from the building." It is not reasonable to interpret the code in this way when we do not have any lot lines, walls, slopes, or other physical barriers that inhibited the slope of our driveway to have a consistent slope away from the house towards the street. We would like the State to rule on this so that in the event that the builder does not honor the informal agreement that we have we will have the states ruling on the proper interpretation of the code.

Truss Alteration to build up bottom chord:
We are appealing the Building Officials interpretation that "nailing a 2 x 6 member to a truss that does not alter the load carrying capacity of the truss does not constitute a structural alteration that requires approval of an RDP." That statement directly contradicts the first sentence of the code; *Truss members shall not be cut, notched, drilled, spliced or altered in any way without the approval of a registered design professional.* We agree that the code official has the authority to determine if a proposed design is satisfactory and complies with the intent of the provisions of the code. We disagree that all the building official has to do to determine if the proposed design is satisfactory and complies with the intent of the provisions of the code is have a drawing stamped by any RDP in his possession. When I e-mailed the state office concerning this issue in June of 2016 I was told that the method of construction in this case was not prescriptive but must meet a performance standard. In our case the building official was presented opinions from the engineer who designed and stamped the original truss drawings and an engineer that we hired to inspect the padded up trusses. Both of these engineers said that the padded up trusses did not meet the performance standard. The stamped drawing that the builder gave the building official is from an engineer who cannot be contacted, shows no calculations as to how he determined that the alteration would meet the performance standard. This engineer is also currently under investigation by DPOR for violating DPOR regulations. From these three engineers, the building official chose to accept the drawing stamped by James Fletcher that was given to him by the builder. Upon further investigation we have found that according to Virginia Residential Code Section R802.10.2 Wood trusses shall be designed in accordance with accepted engineering practice. The design and manufacture of metal-plate-connected wood trusses shall comply with ANSI/TPI 1. The truss design drawings shall be prepared by a registered professional. The attached documents from MiTek and ITWBCG would indicate that the trusses that were padded up and floored by the builder should not have been because they have a different web configuration than the trusses with the 2 x 12 bottom chord. We would like the State to look at the truss drawings and determine if the section of the attic with the floored, padded up trusses and used for

storage passes code based on the ANSI/TPI standards and the determine if the drawing stamped by James Flectcher is acceptable according to code.

<u>Compliance Times:</u>

We would like the State to rule as to whether or not the building official has the flexibility to set compliance times. Based on the 1995 Circuit Court decision in Chesterfield County v. Karnos (attached) it seems that allowing the building official to change compliance times at will would be allowing them to pursue building code violations in its own informal way.

We would also like to add that we found 24 code violations on our home that both the county and the builder missed. Five of these violations were structural and required drawings from a Structural Engineer.

Given the fact that in the time period since we submitted this Statement of Relief Sought we have discovered 11 additional code violations and feel that it will be necessary to have a third party inspect our home. In the event that more code violations are discovered we are concerned based on past history that excessive compliance times will be allowed.

COMMONWEALTH of VIRGINIA

Department of Professional and Occupational Regulation

Terence R. McAuliffe
Governor

Todd Haymore
Secretary of
Commerce and Trade

Jay W. DeBoer
Director

March 9, 2017

Leah Thorpe
16300 Longlands Road
Chesterfield, VA 23832

Re: File No. 2017-00867

Dear Ms. Thorpe:

Thank you for sending the Virginia Department of Professional and Occupational Regulation ("the Department") information regarding your situation.

A review has been completed of the above-referenced file involving Finer Homes, Inc. and James H. Fletcher. The Department has determined that the information in the file does not support a violation of the Board's regulations and/or laws; therefore, the file has been closed.

This determination in no way negates your concerns but rather reflects the boundaries within which the Department functions. While the actions of an individual or business may be considered improper, unethical, or otherwise deserving of corrective action, it may not be a violation of a law or regulation. The authority to discipline its licensees extends only as far as is expressly set forth in the Board's regulations and laws. Should you feel that you have cause for a civil action, you may wish to consult an attorney.

The Department will retain a record of the information you provided. We regret not being able to assist you further in this matter. If you have any questions, please contact me at (804) 356-4404.

Sincerely,

Sharon Dunsing
Investigator
Regulatory Programs and Compliance

COMMONWEALTH of VIRGINIA

Department of Professional and Occupational Regulation

Terence R. McAuliffe
Governor

Todd Haymore
Secretary of
Commerce and Trade

Jay W. DeBoer
Director

March 9, 2017

Finer Homes, Inc.
Attn: Clayborne G. Holt, Responsible Manager
PO Box 1090
Chesterfield, VA 23832

Re: File No. 2017-00867

Dear Mr. Holt:

A review has been completed of the above-referenced file involving the complaint filed against you. The Department has determined that the information in the file does not support a violation of the Board's regulations and/or laws; therefore, the file has been closed.

The Department will retain a record of the information and has the authority to re-open this matter, should it be deemed appropriate. If you have any questions, please contact me at (804) 356-4404.

Sincerely,

Sharon Dunsing
Investigator
Regulatory Programs and Compliance

File

2017-00867

Finer Homes Inc

VIRGINIA DEPARTMENT OF PROFESSIONAL
AND OCCUPATIONAL REGULATION
9960 MAYLAND DRIVE, SUITE 400
RICHMOND, VIRGINIA 23233

CLOSING MEMORANDUM

DATE: March 9, 2017
FILE NUMBER: 2017-00867
RESPONDENT: Finer Homes Inc.
BOARD: Board for Contractors

TO: FILE
FROM: Sharon Dunsing
SUPERVISOR: Ann Tackett

On October 3, 2016, the Department of Professional & Occupational Regulation received a written complaint from Leah Thorpe ("Thorpe") regarding Finer Homes Inc. ("Finer Homes").

The complaint alleged that Finer Homes improperly installed trusses in a walk up attic located at 16300 Longlands Road, Chesterfield, Virginia ("subject property").

The investigation revealed:

- Finer Homes was planning on building a Savanah model "spec" house at the subject property.
- In early 2015, Thorpe and her husband ("the Thorpes") purchased the subject property after the foundation was completed.
- The Thorpes paid an additional $4,000.00 to Finer Homes to have part of the attic built into a walk-up attic.
- Frank Lassiter, P.E. ("Lassiter", no. 0402034728) drew the truss plans and stamped his drawings on March 20, 2015. Lassiter is an engineer who works for MiTek, a company which manufactures trusses.
- Lassiter's drawings were approved by the Chesterfield County Building Official's office ("the County").
- Finer Homes had ordered standard trusses from MiTek before the Thorpes had purchased the subject property. Finer Homes installed the standard trusses pursuant to Lassiter's plans. Since the attic plans had been altered to include a walk-up attic, room trusses should have been installed. Subsequently, this error was brought to the attention of Finer Homes by the Thorpes.
- Finer Homes repaired the trusses by padding the bottom chord of the trusses 6" to allow for insulation.

- On May 18, 2015, the framing inspection passed.
- On June 30, 2015, a certificate of occupancy was issued by the County.
- In June 2016, the Thorpes contacted Greg Holt ("Holt"), Finer Homes Responsible Manager, because they were concerned about the walk-up attic trusses. Specifically, they were concerned about how Finer Homes repaired the trusses since the repair deviated from Lassiter's drawings and MiTek's installation requirements. Holt assured the Thorpes that padding the trusses is an acceptable repair which does not require an engineer's drawing or approval by the County. After the Thorpes complained to Holt, Finer Homes hired James H. Fletcher ("Fletcher", no. 0402026629), an engineer with Structural Technologies, to draw a repair drawing for the trusses.
- Holt gave Fletcher a picture of the walk-up attic trusses. Fletcher said the repair was acceptable and provided Holt with a sealed engineer's drawing of the repair. Holt provided the Thorpes with Fletcher's sealed drawing with the hopes that it would make them feel better about the repaired trusses.
- The Thorpes were still concerned about the repaired trusses, so they contacted Ron Clements ("Clements"), a building inspector with the County.
- Finer Homes provided the County with a copy of Fletcher's drawing.
- The Thorpes questioned whether Fletcher was a licensed engineer. Clements confirmed that Fletcher is a licensed engineer.
- Clements told the Thorpes that the County does not require an engineer's drawing in order to pad trusses since it does not involve structural modifications.
- Clements advised the Thorpes that the truss repair was acceptable and not a code violation.
- The Thorpes appealed the County's determination that padded trusses is an acceptable repair. The Thorpes lost their appeal and have filed an appeal with the State Building Code Technical Review Board. [1]
- In addition to the truss issue, the Thorpes brought several other concerns about the subject property to Clements.
- On August 3, 2016, Kevin Burcher ("Burcher"), building inspector with the County, sent Finer Homes a Letter of Defect listing several areas of concerns.
- On September 16, 2016, Ed Kindervater, a building inspector with the County, sent Finer Homes a second Letter of Defect listing several areas of concerns.
- On September 16, 2016, Burcher sent a Notice of Violation to Finer Homes since compliance had not been obtained on all of the defects listed in the August 3, 2016, Letter of Defect.
- On January 30, 2016, Clements told Investigator Sharon Dunsing ("Investigator Dunsing") that Finer Homes has repaired all of the items listed in the two Letters of Defects.

On February 13, 2017, Fletcher told Investigator Dunsing that Structural Technologies hired him to review Lassiter's original truss drawing and produce an after the fact repair truss drawing. Finer Homes provided Fletcher with a photo of the repaired trusses in Thorpe's attic. The repair, which involved padding the trusses, is a cosmetic repair.

[1] The State Building Code Technical Review Board will hear the appeal on April 21, 2017.

Fletcher stamped the drawing and submitted an "as built" drawing to Structural Technologies.

Closing file as insufficient evidence since Finer Homes' truss repair is acceptable and is not a building code violation.

The Respondent's history of prior complaints is as follows:

- ☒ No prior history
- ☐ Prior history – findings unrelated to current case
  - __ Final Order(s)/Consent Order(s)
  - __ Closed Case(s)
- ☐ Prior history – findings related to current case
  - __ Final Order(s)/Consent Order(s)
  - __ Closed Case(s) (compliance obtained only)

On March 9, 2017, Investigator Dunsing notified both parties by phone and in writing that the file would be closed. On March 9, 2017, Investigator Dunsing closed the file on ETS as:

- ☐ Compliance obtained
- ☒ Insufficient evidence
- ☐ Withdrawn/Incomplete
- ☐ No Law or Regulation
- ☐ License Void
- ☐ No Jurisdiction
- ☐ Other (Includes comments in Comments section of ETS to explain reason for "Other" closure and provide copy of comments on left side of file.)

INTERVIEW MEMOS

VIRGINIA DEPARTMENT OF PROFESSIONAL
AND OCCUPATIONAL REGULATION
9960 MAYLAND DRIVE, SUITE 400
RICHMOND, VIRGINIA 23233-1463

INTERVIEW MEMORANDUM

DATE: January 30, 2017
FILE NUMBER: 2017-00867
RESPONDENT: Finer Homes Inc.
PREPARED BY: Sharon Dunsing

Individuals/Entities Interviewed: Claybome G. Holt

On January 30, 2017, at 11:00AM, Sharon Dunsing, the Board's agent, interviewed Claybome G. Holt ("Holt"), respondent, at 10103 Memory Lane, Suite 101, Chesterfield, Virginia. The following supplemental information was provided:

- Finer Homes mistakenly installed MiTech standard trusses in the subject property's walk-up attic.
- This error was brought to Finer Homes' attention by the Thorpe's.
- Finer Homes' fixed the trusses by padding the trusses.
- On June 30, 2015, a certificate of occupancy was issued.
- In May and June 2016, the Thorpe's contacted Holt and the Chesterfield County Building Official's office to discuss numerous complaints including the padded trusses. The Thorpes were concerned about the walk-in attic trusses because the repair deviated from Frank Lassiter's drawings and MiTek's installation requirements.
- Chesterfield County does not require an engineer's drawing in order to pad trusses since it does not involve structural modifications.
- After the Thorpe's complained, Finer Homes hired Fletcher, of Structural Technologies, to draw a repair drawing for the trusses. The stamped design padded the bottom chord of the trusses 6" to allow for insulation.
- Finer Homes provided the building official's office with a copy of the drawing.
- Lassiter also prepared a stamp design for the repair of the trusses which was consistent with MiTech's installation of its trusses.
- Finer Homes received 2 Letters of Defects from the Building Official's office.
- All of the defects in the Letters of Defects have been corrected.
- The Thorpes brought several other concerns about the subject property to Clements. Even though the one year warranty has expired, Finer Homes is working with the Thorpes to make all of the necessary repairs. The Thorpes want a gutter repaired and have some squeaky floors repaired.

VIRGINIA DEPARTMENT OF PROFESSIONAL AND OCCUPATIONAL REGULATION
9960 MAYLAND DRIVE, SUITE 400
RICHMOND, VIRGINIA 23233-1463

INTERVIEW MEMORANDUM

DATE: December 27, 2016
FILE NUMBER: 2017-00867
RESPONDENT: Finer Homes, Inc.
PREPARED BY: Sharon Dunsing

Individuals/Entities Interviewed: Ron Clements

On December 27, 2016, at 10:00AM, Sharon Dunsing, the Board's agent, interviewed Ron Clements ("Clements"), Chesterfield County Building Official, in person at 9800 Government Center Parkway, Chesterfield, Virginia. The following supplemental information was provided:

- Finer Homes, Inc. ("Finer Homes") was planning on building a Savanah model "spec" house at 16300 Longlands Road, Chesterfield, Virginia ("subject property").
- The Thorpe's purchased the subject property about when the foundation was being built.
- The Thorpe's paid $4,000.00 to Finer Homes to have part of the attic built into a walk-up attic.
- Frank Lassiter, P.E. ("Lassiter") drew the truss plans and stamped his drawings on March 20, 2015.
- The standard trusses had already been ordered from MiTech. Finer Homes installed the standard trusses. Since the attic plans had been altered to include a walk-up attic, room trusses should have been installed. Subsequently, this error was brought to Finer Homes' attention by the Thorpe's.
- Finer Homes' fixed the trusses by padding the trusses.
- On June 30, 2015, a certificate of occupancy was issued.
- In June 2016, the Thorpe's contacted Clement's office because they were concerned about the walk-in attic trusses because the repair deviated from Lassiter's drawings and MiTek's installation requirements. They also questioned whether Fletcher was a licensed engineer. Clements confirmed that Fletcher is a licensed engineer.
- Clement's office does not require an engineer's drawing in order to pad trusses since it did not involve structural modifications.
- After the Thorpe's complained, Finer Homes hired James Fletcher P.E. ("Fletcher") of Structural Technologies to draw a repair drawing for the trusses. The stamped design padded the bottom chord of the trusses 6" to allow for insulation.
- Finer Homes provided Clement's office with a copy of the drawing.

- Clements advised the Thorpe's that the truss repair was acceptable and not a code violation.
- Lassiter also prepared a stamp design for the repair of the trusses which was consistent with MiTech's installation of its trusses.
- The Thorpes brought several other concerns about the subject property to Clements.
- On August 3, 2016, Kevin Burcher ("Burcher"), building official, sent Finer Homes a Letter of Defect listing several areas of concerns.
- On September 16, 2016, Burcher sent a Notice of Violation to Finer Homes since compliance had not been obtained on all of the defects after 30 days.
- As of December 27, 2016, most of the defects have been corrected. Greg Holt ("Holt"), Finer Homes' Responsible Manager, has assured the Building Official's office that they will correct all violations noted.

VIRGINIA DEPARTMENT OF PROFESSIONAL
AND OCCUPATIONAL REGULATION
9960 MAYLAND DRIVE, SUITE 400
RICHMOND, VIRGINIA 23233-1463

INTERVIEW MEMORANDUM

DATE: January 30, 2017
FILE NUMBER: 2017-00867
RESPONDENT: Finer Homes, Inc.
PREPARED BY: Sharon Dunsing

Individuals/Entities Interviewed: Ron Clements

On January 30, 2017, at 11:00AM, Sharon Dunsing, the Board's agent, interviewed Ron Clements ("Clements"), Chesterfield County Building Official, by telephone at (804) 751-4163. The following supplemental information was provided:

- Finer Homes, Inc. ("Finer Homes") has repaired all of the items listed in the 2 Letter of Defects letters.
- The only outstanding issue is that the HVAC unit's 16" duct needs to be replaced with an 18" duct. Finer Homes, Inc.'s subcontractor, W.G. Speeks is willing to replace it. However, if Leah Thorpe, the complainant, wants to hire another subcontractor to do the work, Finer Homes has agreed to pay the bill.

VIRGINIA DEPARTMENT OF PROFESSIONAL
AND OCCUPATIONAL REGULATION
9960 MAYLAND DRIVE, SUITE 400
RICHMOND, VIRGINIA 23233-1463

INTERVIEW MEMORANDUM

DATE: December 21, 2016
FILE NUMBER: 2017-00867
RESPONDENT: Finer Homes Inc
PREPARED BY: Sharon Dunsing

Individuals/Entities Interviewed: Leah Thorpe

On December 21, 2016, at 9:15AM, Sharon Dunsing, the Board's agent, interviewed Leah Thorpe ("Thorpe"), complainant, by telephone at (804) 218-8493. The following supplemental information was provided:

- Finer Homes built a home for Thorpe. The home was a "Savannah" with a habitable attic.
- P.E. Frank Lassiter ("Lassiter") drew the trusses drawing.
- The building permit was issued using the trusses drawn by Lassiter.
- During the construction, Thorpe noticed that the trusses which were installed did not match the original drawings that had been approved by the building official.
- P.E. James Fletcher ("Fletcher") drew repair trusses. Finer Homes installed trusses per Fletcher's drawings. The trusses had a smaller bottom chord which was padded up.
- Initially, the building official sent a notice of violation to Finer Homes. Subsequently, the building official considered the padding of the trusses issue to be resolved since Fletcher had filed his repair drawing with their office.
- Thorpe appealed the county building official's ruling and lost.
- Thorpe is preparing an appeal with the state building official's office.
- On August 3, 2016, the building official sent a Letter of Defect to Finer Homes for:
    - Exhaust duct for the master bath has a hole in it, thus not venting outdoors.
    - The concrete driveway has less than 2.0 percent slope from the building foundation.
    - The foundation wall was removed for the HVAC supply and return lines resulting in improper bearing of the joist and sill plate on the foundation.
    - The trusses were altered for building up the floor for insulation, installing a window, and building a platform for the HVAC equipment.
    - The master bath tub was not installed per the manufacturer's installation instructions The tub was not properly bedded.
- A Notice of Violation was sent since the items were not corrected within 30 days.

VIRGINIA DEPARTMENT OF PROFESSIONAL
AND OCCUPATIONAL REGULATION
9960 MAYLAND DRIVE, SUITE 400
RICHMOND, VIRGINIA 23233-1463

INTERVIEW MEMORANDUM

DATE: February 13, 2017
FILE NUMBER: 2017-00867
RESPONDENT: Finer Homes, Inc.
PREPARED BY: Sharon Dunsing

Individuals/Entities Interviewed: James H. Fletcher

On February 13, 2017, at 8:55AM, Sharon Dunsing, the Board's agent, interviewed James H. Fletcher ("Fletcher"), witness, by telephone at (757) 508-3156. The following supplemental information was provided:

- Fletcher is a licensed engineer.
- Structural Technologies asked him to review Frank Lassiter's original truss drawing (the "spec" sheet) and produce an after the fact "repair" truss drawing.
- Finer Homes, Inc. provided Fletcher with a photo of the repaired trusses in Leah Thorpe's attic.
- Fletcher stamped the drawing and submitted an "as built" drawing to Structural Technologies.
- Padding the trusses is a cosmetic repair. The truss analysis remains the same as the original drawing.
- The modification is not a structural modification, it is a padding addition.

COMPLAINANT DOCUMENTS

Kirkley, Barbara (DPOR)

From:	Leah Thorpe <leahbthorpe@gmail.com>
Sent:	Monday, October 03, 2016 8:58 AM
To:	DPOR: Complaint Analysis (DPOR)
Cc:	Greg Thorpe
Subject:	Complaint
Attachments:	DPOR COMPLAINT-JAMES FLETCHER.pdf; EMAIL-JAMES FLETCHER COMPLAINT.pdf; FLETCHER REPAIR.pdf; REPAIR FOR HVAC-LASSITER.pdf; SYSTEMATIC ENGINEERING REPORT.pdf; TRUSS MODIFICATION 5-23 1.jpg; platform for HVAC 5-2-15.jpg; HVAC in attic 5-7-15.jpg

To Whom It May Concern:

I have attached my complaint form and documentation for my complaint against James H. Fletcher. Please let me know if there is additional information that you need. Thank you.

Sincerely,

Leah Thorpe

Department of Professional and Occupational Regulation

FOR OFFICE USE ONLY
LICENSE NUMBER:
EXPIRATION DATE:
FILE NUMBER:

COMPLAINT FORM

NOTE: The Department cannot guarantee anonymity. By law, all complaints received by the Department are subject to public disclosure once a case is closed. Therefore, if you wish to file a complaint anonymously, please do not submit the complaint electronically. In addition, do not include any personal information on the complaint form or any supplemental documents that reveal your identity. While the Department may accept an anonymous complaint, it will not proceed if it lacks sufficient information to support a regulatory or criminal violation.

SECTION I: REQUIRED INFORMATION

COMPLAINT FILED BY

Name: Leah Thorpe

Company (Your company name if filing on behalf of a company):

Mailing Address: 16300 Longlands Road

City, State, and Zip: Chesterfield, VA 23832

Phone Numbers: 804-378-2480 ext. 227 (BUSINESS) (804) 218-8493 (CELL) (HOME/OTHER)

Email Address: leahhthorpe@gmail.com

Address where problem occurred: 16300 Longlands Road

City/County: Chesterfield, VA 23832

How did you hear about DPOR?
- [ ] Newspaper
- [ ] TV
- [ ] Radio
- [x] Internet
- [ ] DPOR publication, speaker, or contact
- [ ] Referred by
- [ ] Other

COMPLAINT AGAINST

Individual Name: James Herman Fletcher

Company: Not known

Address: Not known

City, State, and Zip: Not known

Phone Numbers: Not known (BUSINESS) Not known (CELL) Not known (HOME/OTHER)

Email Address: Not known

Type of License and/or License Number: Professional Engineer 0402026629

SECTION II: SUPPORTING DOCUMENTS

To process a Complaint Form, supporting documents are needed, which may include the following:

ALL BOARDS	Copies of all relevant documentation, including, but not limited to: contracts, agreements, invoices, receipts, correspondence, and photographs (all pages - front and back)
CONTRACTOR	Copy of contract, Proof of Payment, Building Official Documentation, Notice of Violation
REAL ESTATE	Purchase Contracts, Listing Agreements, Settlement Statements, Cancelled Checks, Disclosure Statements, Management Agreements, Leases
APPRAISER	Copy of Appraisal
LAND SURVEYOR	Copy of Survey
BARBERS & COSMETOLOGY	Copy of Medical Records/Photos (re: injuries)

Describe the complaint. If more room is needed, include an additional document with submittal.

On June 1, 2016 we sent pictures (attached) of an HVAC platform that was installed in our attic and 'padded up' trusses to Frank Lassiter, who is the PE that stamped our original truss drawings. He emailed us back on June 2, 2016 telling us to have Structural Technologies, the company that Finer Homes (our builder) purchased the trusses from, to issue repair drawings for both items. On June 20, 2016 we received from Finer Homes the drawing for the HVAC platform repair which was prepared and stamped by Frank Lassiter (attached) . On June 21, 2016 we received a 'repair' drawing from Finer Homes for the padded up trusses which was prepared and stamped by James H. Fletcher (attached). As you can see the 'repair'drawing by James H Fletcher for the padded up trusses is nothing more than a PDF 'as built' drawing of exactly what Finer Homes did. When we emailed Finer Homes and asked what company Mr. Fletcher worked for we were told Fletcher and Associates. We looked the number up on the Internet and called and the phone was not longer in service. We are filing this complaint against Mr. Fletcher on the grounds that he has violated Section 18VAC10-20-740 PROFESSIONAL RESPONSIBILITY, item B, and 18VAC10-20-760, USE OF SEAL, Items A, B, and E, of The Commonwealth of Virginia REGULATIONS Governing Architects, Professional Engineers, Land Surveyors, Certified Interior Designers and Landscape Architects.

We believe that Finer Homes should have obtained both repair drawings from Mr. Lassiter as he was the engineer that prepared and stamped the original truss drawings. We also believe that Finer Homes sought out a different engineer because Mr. Lassiter did not agree with the method of construction that Finer Homes used to pad up our trusses and would not have stamped the drawing that Mr. Fletcher stamped. We were very suspicious of the repair drawing done by Mr. Fletcher so we hired Jesse Wastler of Systematic Engineering to inspect our attic and he agreed with Mr. Lassiter that the method of construction was not adequate. We have also attached his report. We have all of the emails from the parties involved if needed

I wish to complain about the individual/business named above. I understand that a regulatory board does not have the authority to require a licensee to return money, correct deficiencies, or provide other personal remedies. I further understand that decisions regarding criminal prosecutions are at the discretion of the Department and the Commonwealth's Attorney. I am submitting this information so that the Department may determine whether disciplinary or criminal action against this individual or business should be considered. I verify under penalty of law that the information provided is true to the best of my knowledge.

Full Name Leah Thorpe Leah Thorpe Date 10-3-16

Please return this form one of the following ways:

EMAIL * complaintanalysis@dpor.virginia.gov
* BEFORE SUBMITTING VIA EMAIL, PLEASE SEE INSTRUCTIONS BELOW

FAX (866) 282-3932

MAIL

Department of Professional and Occupational Regulation
Regulatory Programs & Compliance
Complaint Analysis & Resolution
9960 Mayland Drive, Suite 400
Richmond, Virginia 23233-1485

Contact Information:

Dept. of Professional and Occupational Regulation
Complaint Analysis & Resolution

COMPLAINTS - (804) 367-8504
VA RELAY* - 7-1-1
HOTLINE FOR OLDER VIRGINIANS - (804) 367-2178
EMAIL - complaintanalysis@dpor.virginia.gov
WEBSITE - www.dpor.virginia.gov

* Virginia Relay enables people who are deaf, hard of hearing, Deaf Blind, or speech disabled to communicate by TTY (text telephone) or another assistive telephone device with anyone who uses a standard phone.

* There is a size limit for documents submitted via email. If your attachments exceed 18 MB, a non-delivery receipt will be sent to you. If you exceed the limit, please submit the complaint form and supporting documents to the mailing address above.

COMMONWEALTH of VIRGINIA

Department of Professional and Occupational Regulation

Terence R. McAuliffe
Governor

Todd Haymore
Secretary of
Commerce and Trade

Jay W. DeBoer
Director

October 7, 2016

Leah Thorpe
16300 Longlands Road
Chesterfield VA 23832

COPY

RE: File No. 2017-00867

Dear Leah Thorpe:

Thank you for sending the Virginia Department of Professional and Occupational Regulation ("the Department") information regarding your situation. The complaint has been assigned the above-referenced file number. Please provide this number if you contact our office about the complaint.

In order to process the complaint, please send the following additional information no later than **Monday, October 24, 2016**. **Please provide as much information as possible. If you are unable to provide all of the documentation requested, please explain the reason in writing.** If the information is not received by the above date, the Department may not be able to proceed in this matter and the file may be closed with no further action.

- **The complaint alleges that Mr. Fletcher's June 8, 2016 drawing is "nothing more than a PDF 'as built' drawing of exactly what Finer Homes did." Please provide a copy of the original truss drawings referenced in the second paragraph of the complaint prepared by Mr. Lassiter and a copy of the drawings of the trusses as actually installed by Finer Homes, showing that the work performed by Finer Homes deviated from the truss drawings originally prepared by Lassiter; and**
- **Provide a copy of any documentation from the local building official's office stating that Fletcher's June 8, 2016 drawing would be insufficient to ensure compliance with applicable building codes. Also, if required building permits were obtained pursuant to the original truss drawings prepared by Lassiter, and if Finer Homes deviated from said drawings, please also provide a copy of any documentation from the building official regarding any actions taken**

by the building official against Finer Homes in response to deviations from the Lassiter's plans.

If the requested information is received by the above date, the Department will conduct an initial analysis of the complaint. The initial analysis includes giving the respondent, who is the subject of the complaint, a copy of the complaint and an opportunity to submit a written response. Staff may close the file or further process the file.

Staff may collect additional evidence, interview witness(es), and/or perform site visits. Upon review of the evidence, staff will determine if probable cause exists to support a violation of the Board's regulations and/or laws. If no probable cause of a violation is established, the file will be closed with no further action.

If the evidence supports possible violation(s) of the Board's regulations and/or laws, the Department will further process the file for disciplinary action. The purpose of the disciplinary process is to determine if the evidence supports a finding that a violation has occurred. This may be accomplished through the use of a Consent Order or an Informal Fact-Finding Conference ("IFF"). The respondent may agree to violations of the Board's regulations and/or laws by accepting a Citation or agreeing to a Consent Order. Otherwise, if an IFF is held, it will be open to the public and you may be contacted, if it is determined your participation is necessary.

The Board may take disciplinary action against the licensee to suspend, revoke, fine, or fail to renew a license when probable cause exists. A regulatory board cannot require any individual or business to refund money, correct deficiencies, or provide other personal remedies. Ethical, civil, and legal issues will not be addressed by the Board. In some cases, a civil law suit may be your only recourse to resolve a matter. The Department cannot provide legal advice. Should you feel that you have cause for a civil law suit, you may wish to consult an attorney.

The Department considers all complaints important. The processing of the complaint will be conducted in as timely a manner as possible. Many complaints, however, present an immediate threat to public safety and must be given priority. Thank you for your patience during the complaint process.

You will be notified regarding actions taken by the Department and/or Board regarding the file. Please keep us informed of any changes in your address or phone numbers.

The Department thanks you for reporting suspected violations of the Board's regulations and/or laws. It is through your cooperation and assistance that all citizens of the Commonwealth of Virginia enjoy the protections of well-regulated professions and occupations.

COPY

You may respond by regular mail, fax at (866) 282-3932 or email at complaintanalysis@dpor.virginia.gov. If you have any questions, please call (804) 367-0878.

Sincerely,

Paula Muniec
Investigative Analyst
Complaint Analysis and Resolution

Kirkley, Barbara (DPOR)

From: Leah Thorpe <leahbthorpe@gmail.com>
Sent: Friday, October 21, 2016 4:51 PM
To: DPOR: Complaint Analysis (DPOR)
Subject: File No. 2017-00867
Attachments: ORIGINAL TRUSS DRAWINGS-THORPE.pdf; LETTERS OF DEFECT AND NOTICE OF VIOLATION.pdf

Dear Ms. Munlec:

As requested, I have attached a copy of the original truss drawings. The trusses that were installed by Finer Homes are the same trusses that are in the drawings except that they modified the trusses labeled T-1VA and T-1VX by adding a 2 x 6 to the bottom chord. They did this without consulting the engineer that stamped the original truss package. They also did not modify the truss information given to the county to obtain a building permit and they did not tell us that they were altering the trusses. I have attached our Roof Truss Layout diagram so that you can see what trusses were modified.

We contracted with Finer Homes to build a Savannah with a habitable attic. They told us that if we did not choose the habitable attic option before construction started that we would never be able to make our attic habitable. The option cost $4,000.00 and we chose to add that option to our contract. On April 18, 2015 we noticed that the trusses they had installed were not correct. We emailed them and they seemed shocked that this could happen but not to worry.....they could fix it. This was quite a different story than they told when we were signing the contract. We did our homework and found that modifying manufactured trusses was very difficult and we were not comfortable with having them modify the trusses in any way so we just told them to leave it as it was. WE DID NOT KNOW AT THAT TIME THAT THEY HAD ALREADY MODIFIED THE TRUSSES. The builder, Greg Holt admitted to us that he had caught the error in the paperwork and told the person that orders their trusses to make sure he called the truss company and made the correction and unfortunately that was never done. I am not sure why the trusses sat on our lot for 6 days and it never occurred to Mr. Holt to have someone check them and make sure they were right.

We closed on our home on June 30, 2015. During the final walk-through we asked their supervisor for the load limits on the attic. He promised he would get them for us. We did not get a copy of our truss drawings until May of 2016. The first thing we noticed was the drawing were for a Savannah with a partial attic. We then noticed the discrepancy in the bottom chord height and went back through pictures we had taken during construction and saw what they had done. When we expressed our concern about the modification they said they would have the engineer that designed the trusses come talk to us to assure us that it was okay. They had Allan Simmons, the VP of Sales and Marketing for Structural Technologies come and talk to us.....not the engineer that designed our trusses. He assured us that this method of construction was done all of the time and that some builders even bought the trusses with the smaller bottom chord and padded them up themselves because it was cheaper. He also assured us that Frank Lassister just made a lot of money putting his stamp on our drawings because the metal plate connector company has to stamp the drawings and their were not very many companies that did this. Mr. Simmons assured us that Frank Lassiter "didn't care about our trusses". I called Mr. Lassister the next day and he was very nice and asked me to email him the picture of the padded up trusses and the truss drawings. He emailed me back the next day and said to tell Structural Technologies to issue repair drawings.. I did this and Mr. Simmons asked for pictures which I sent and through a series of emails he told me that the repair drawing were being done by Mitek and I would get copies when they were complete. Finer Homes had also added an HVAC platform in the trusses without consulting an engineer and a repair drawing was being done for that also.

During the month of June I also contacted the Building Inspection office about the truss modifications and other items we were concerned about. Mr. Kindervator assured me that the padding up of the trusses met code but when asked to put it in writing he would not. When I met with Mr. Kindervator on June 22, 2016, I showed him the repair drawing that Finer had given us that was stamped by James Fletcher and expressed my concerns about it being a valid drawing. He said as long as it was stamped by an engineer it could be written on a scrap of paper and it would be valid. I emailed the picture of the padded up trusses to the state building inspection office and I was told that there was not a prescriptive practice for this method of construction but a performance standard that had to be met using an analysis of loads and stresses. When I emailed this to Mr. Kindervater he then included the padding up of the trusses in the Letter of Defect that the Department of Building Inspections sent Finer Homes on August 3rd. I assumed that since he had seen the drawing and still included the item as a defect that he also did not think it was valid.

Finer Homes did not seem to take the Letter of Defect very seriously as they did not fix but two items listed in the Letter of Defect in the thirty day period. Also, while fixing, replacing the bathtub, they created two more violations by cutting completely through an I joist and cutting a 6 x 14 hole under our tub. I emailed Mr. Kindervator and asked if a Letter of Violation had been sent to Finer Homes since they had not complied within the 30 days. I also reminded him that by law, building inspections had to issue the letter and not take "an informal approach". He said that the Letter of Violation would be issued and also a Letter of Defect for the new code violations. In the Letter of Violation the padding up of the trusses was listed as resolved because the department of building inspections now had the "repair" drawing by Mr. Fletcher and the Building Official, Mr. Witt had said it was acceptable. I met with Chesterfield County's as[illegible] two weeks ago regarding this issue and I am appealing the Building Officials decision.

RECEIVED
OCT 24 2016
CAR

I have attached the truss design drawings, th. .ss layout, the repair drawing for the HVAC pla. .d done by Frank Lassiter, and e-mails between myself and the building inspectors and county administrators.

A building permit was obtained by Finer Homes using the attached truss drawings. Finer Homes did not submit amended truss drawings stamped by an engineer or Registered Design Professional when they deviated from the original truss drawings. The first Letter of Defect does include the padding up of the trusses as a defect and I firmly believe that I will win the appeal regarding the decision of the Building Official to accept Mr. Fletcher's drawing.

It is my understanding from reading the documentation from DPOR regarding the ethical standards of PE's that at the very least Mr. Fletcher has not complied with the format in which a drawing should have, which would include a cover page with contact information. His drawing is not verifiable. Also, the documentation on the DPOR website says that when the original engineer that created the drawings is available then he/she would be the correct person to issue the repair.

Thank you for your time and consideration. I am sending some attachments in a second e-mail since my first email was not deliverable because it was too big.

Respectfully,

Leah Thorpe

Kirkley, Barbara (DPOR)

From:	Leah Thorpe <leahbthorpe@gmail.com>
Sent:	Friday, October 21, 2016 4:53 PM
To:	DPOR: Complaint Analysis (DPOR)
Subject:	File No. 2017-00887
Attachments:	E-MAIL WITH COUNTY DEPUTY COUNTY ADMINISTRATOR.pdf; TRUSS LAYOUT-THORPE.pdf; EMAILS TO BUILDING INSPECTORS.pdf; HVAC PLATFORM REPAIR BY LASSITER.pdf

Dear Ms. Muniec:

I have attached more documents for your review. Thank you.

Leah Thorpe

VIRGINIA DEPARTMENT OF PROFESSIONAL
AND OCCUPATIONAL REGULATION
9960 MAYLAND DRIVE, SUITE 400
RICHMOND, VIRGINIA 23233-1463

MEMO TO FILE

DATE: October 25, 2016
FILE NUMBER: 2017-00867
RESPONDENT: Finer Homes, Inc.
PREPARED BY: Michael W. Leedom, Intake Supervisor

During a review of the documentation in file 2017-00867, it was discovered that Finer Homes, Inc., Board for Contractors Lic. No. 2701023861 ("Finer") may have deviated from truss drawings prepared by professional engineer Frank Lassiter that were used to obtain a building permit for work at 16300 Longlands Rd., Chesterfield, VA 23182.

As a result, Finer may be in violation of one or more of the following Board for Contractors regulations: 18 VAC 50-22-260.B.5, B.6, and/or B.33.

File Report

2017-00867 **Section:** Disciplinary **Priority:** 0

Main Complainant

LEAH THORPE

Home :

16300 LONGLANDS ROAD

CHESTERFIELD, VA 23832

Email/Internet Address: leahbthorpe@gmail.com

Work Phone: 804 - 378 - 2480

Current ☑ Licensee ☐ Mailing ☑

Location of Offense ☐ Job Site ☐

Main Respondent 27 1 23961 A Active

FINER HOMES INC

DPOR Address : PO BOX 1090

CHESTERFIELD, VA 23832

Email/Internet Address:

Current ☑ Licensee ☑ Mailing ☐

Location of Offense ☐ Job Site ☐

File Summary:

First Violation Contract ☐ **Date Of Offense:** 06/01/2016 **Docketed:** 10/06/2016

Criminal Action ☐ **Compensation Amount:** **Closed:** 00/00/0000

Investigator:

Region: South Central

Stage: Complaint Analysis & Resolution

Status: Open

License Type: 2701 Class A Contractor

Class: Professional conduct

Findings:

COMMONWEALTH of VIRGINIA

Department of Professional and Occupational Regulation

Terence R. McAuliffe
Governor

Todd Haymore
Secretary of
Commerce and Trade

Jay W. DeBoer
Director

October 26, 2016

Finer Homes Inc
Attn: Clayborne G. Holt, Responsible Manager
PO Box 1090
Chesterfield VA 23832

and

Finer Homes Inc
Attn: Clayborne G. Holt, Responsible Manager
10301 Memory Lane, Suites 101 & 201
Chesterfield VA 23832

RE: File No. 2017-00867
Finer Homes Inc

Dear Finer Homes Inc:

The Virginia Department of Professional and Occupational Regulation ("the Department") is reviewing the above-referenced file, pursuant to Title 54.1 of the Code of Virginia. Enclosed is a copy of the complaint for your review.

You are requested to provide a written response to the allegations that must be received in our office by Thursday, November 17, 2016. You may respond by regular mail, fax at 866-282-3932 or email at complaintanalysis@dpor.virginia.gov. Please include all relevant documents that will assist in our review of this matter. This may be your only opportunity to provide your position regarding the allegations. Some licensees elect to telephone our office to verbally explain their response or to add to their written response. We respectfully request that you do not call to provide a response or attempt to explain your perspective of the allegations. At this point in our review of the matter, the case has not yet been assigned to a specific staff member and therefore, there will not be a staff person who is able to discuss your case. You will be contacted once your response has been received and reviewed.

Failure to respond to a Board's agent seeking information regarding a complaint filed may result in a regulatory violation of the Board's regulation and disciplinary action may be taken against your license.

Staff may collect additional evidence, interview witness(es), and/or perform site visits. Upon review of the evidence, staff will determine if probable cause exists to support a violation of the Board's regulations and/or laws. If no probable cause of a violation is established, the file will be closed with no further action.

If the evidence supports possible violation(s) of the Board's regulations and/or laws, the Department will further process the file for disciplinary action. The purpose of the disciplinary process is to determine if the evidence supports a finding that a violation has occurred. This may be accomplished through the use of a Citation, a Consent Order, or an Informal Fact-Finding Conference ("IFF"). You may agree to violations of the Board's regulations and/or laws by accepting a Citation or agreeing to a Consent Order. Otherwise, if an IFF is held, you will be notified of the date and time. IFFs are open to the public.

The Board may take disciplinary action to suspend, revoke, fine, or fail to renew a license when a violation is found.

Your cooperation as a licensee is appreciated. **Please provide your written response as described above, by the stated deadline.**

Sincerely,
Complaint Analysis and Resolution

pm/enclosure

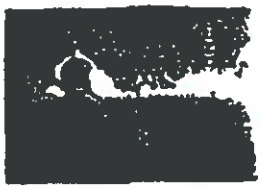

Your next home is right here.

Finer Homes
We build your dreams.

INFO LINE
(804) 748-7575

PO Box 1080
Chesterfield, VA 23832

Email:
sales@finerhomesinc.net
Website:
www.FinerHomesInc.net

FINER HOMES NEIGHBORHOODS

AUTUMN GROVE
BELLSHIRE
BENDAHL VALLEY
CHESDIN HARBOR
CLAY POINTE
COLLINGTON
HARPERS MILL
THE HIGHLANDS
WILLOW CREEK
WINDEMERE

November 17, 2016

RE: File # 2017-00867
Finer Homes, Inc

Dear DPOR,

This is our written response to your letter dated October 26, 2016.

You have all the engineered documents on file that are associated with this case, and were sent with the original complaint.

The Thorpe's claim : Finer used an outside engineer to "pad up" the trusses. This is a true statement. Below is supporting evidence of why we don't think its an issue:

- Finer did use a Structural Technologies "outside engineer", stamped design to pad the bottom chord of the trusses 6", to allow for insulation.
- This modification is not a structural modification, it is a padding addition. This didn't change the loading of the truss, just the depth of the bottom chord. We have used this method many times before with no issue as this has been an industry accepted alteration for years.
- The engineer that was used on the original truss design is a Miteck engineer that provides the truss connectors and is not allowed to vary from their national posted Padding design on their website.
- Structural technology used Jim Fletcher, the private engineer that they have used for truss padding as well as for any and all truss modifications.
- Fletcher's padding design reflects the modification made to the trusses by Finer.
- Fletchers design was sealed by his engineering stamp.
- Fletchers contact information is Fletcher and Associates – JfandAssoc@gmail.com
  Fletchers phone number is (757) 508-3156

Should you have any questions, please feel free to contact me, Greg Holt at (804) 920-7145.

Thank you,

Greg Holt

RECEIVED
NOV 17 2016
CAR

Job	Truss	Truss Type	Qty	Ply	SAVANNAH W/ ROG & PART ATTIC
26817	T-1VX	COMMON	6	1	Job Reference (optional)

Structural Technologies, Detroit, VA 23517

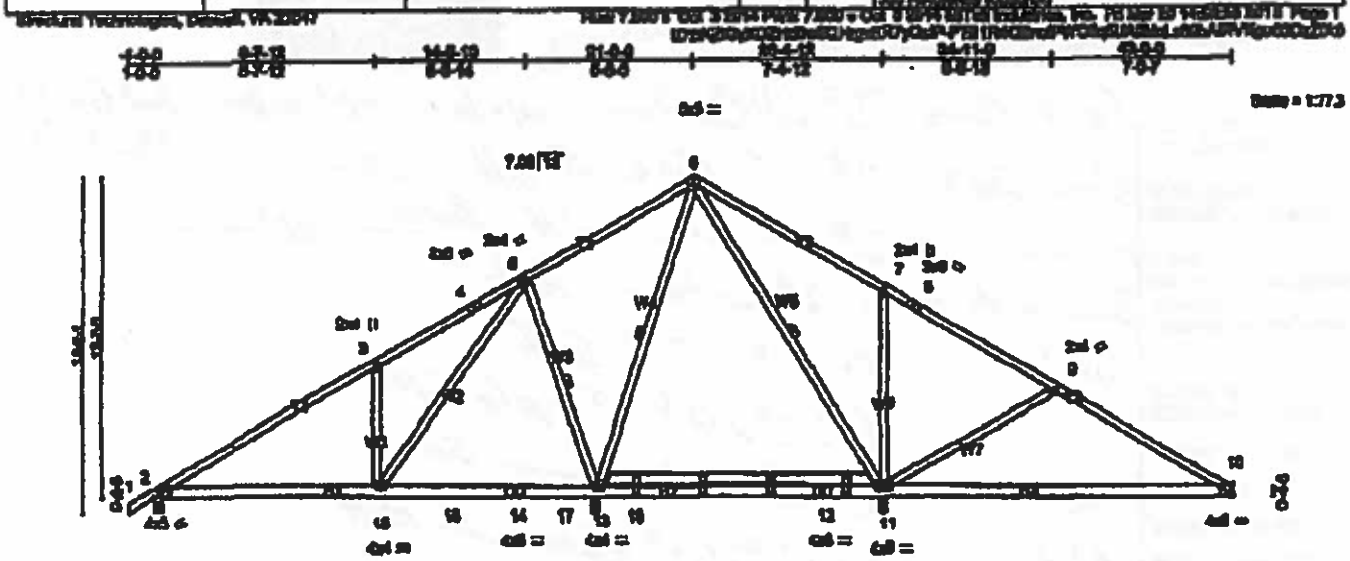

Plate Offsets (X,Y)= [illegible]

LOADING (psf)		SPACING-	2-0-0	CSI.		DEFL.	in	(loc)	l/def	L/d	PLATES	GRIP
TCLL	20.0	Plate Grip DOL	1.15	TC	0.76	Vert(LL)	-0.35	10-11	>448	360	MT20	244/190
TCDL	10.0	Lumber DOL	1.15	BC	0.89	Vert(TL)	-0.67	10-11	>242	180		
BCLL	0.0 *	Rep Stress Incr	YES	WB	0.54	Horz(TL)	0.01	10	n/a	n/a		
BCDL	10.0	Code IRC2009/TPI2007		(Matrix)							Weight: 200 lb	FT = 5%

LUMBER-
TOP CHORD 2x4 SP No.2
BOT CHORD 2x6 SP No.2 "Except" B2: 2x6 SP No.1D
WEBS 2x4 SP No.3

STACH (1) 2X6 ATOP BOTTOM CHORD AS SHOWN. ATTACH W/ 2X4 X 11" BLOCKS SET 36" OC ONE FACE. USE (4) 16D BOX NAILS EACH MEMBER EACH CONNECTION.

BRACING-
TOP CHORD Structural wood sheathing directly applied or 6-3-7 on purlins.
BOT CHORD Rigid ceiling directly applied or 6-0-0 on bracing. Except: 10-0-0 on bracing: 3-16.
WEBS 1 Row at midpt 5-13, 6-13, 9-11

MiTek recommends that Stabilizers and required cross bracing be installed during truss erection, in accordance with Stabilizer Installation guide.

REACTIONS. (lb/size) 2=615/0-4-0, 13=1637/0-0-0, 11=1240/0-0-0, 10=350/Mechanical
Max Horz 2=260(LC 6)
Max Uplift2=-81(LC 6), 13=-218(LC 6), 11=-220(LC 7), 10=-21(LC 7)
Max Grav 2=620(LC 10), 13=1637(LC 1), 11=1250(LC 11), 10=297(LC 11)

FORCES. (lb) - Maximum Compression/Maximum Tension
TOP CHORD 1-2=0/33, 2-3=-553/60, 3-4=-613/183, 4-5=-432/197, 5-6=-43/402, 6-7=-1/324, 7-8=-35/327, 8-9=-73/144, 9-10=-34/58
BOT CHORD 3-15=-137/445, 15-16=-84/191, 14-15=-84/191, 14-17=-84/191, 13-17=-84/191, 13-18=-137/233, 12-18=-137/233, 11-12=-137/233, 10-11=-14/214
WEBS 3-15=-435/211, 5-15=-319/377, 5-13=-703/258, 6-13=-532/24, 6-11=-170/0, 7-11=-458/225, 9-11=-412/189

NOTES-
1) Unbalanced roof live loads have been considered for this design.
2) Wind: ASCE 7-05; 90mph; TCDL=6.0psf; BCDL=3.0psf; h=25ft; Cat. II; Exp B; enclosed; MWFRS (low-rise) gable end zone and C-C Exterior(2) zone; cantilever left and right exposed ; end vertical left and right exposed;C-C for members and forces & MWFRS for reactions shown; Lumber DOL=1.15 plate grip DOL=1.15
3) This truss has been designed for a 20.0 psf bottom chord live load nonconcurrent with any other live loads.
4) * This truss has been designed for a live load of 20.0psf on the bottom chord in all areas where a rectangle 3-6-0 tall by 2-0-0 wide will fit between the bottom chord and any other members, with BCDL = 10.0psf.
5) Refer to girder(s) for truss to truss connections.
6) Provide mechanical connection (by others) of truss to bearing plate capable of withstanding 81 lb uplift at joint 2, 215 lb uplift at joint 13, 220 lb uplift at joint 11 and 21 lb uplift at joint 10.
7) This truss is designed in accordance with the 2009 International Residential Code sections R502.11.1 and R502.10.2 and referenced standard ANSI/TPI 1.
8) "Semi-rigid pitchbreaks with fixed heels" Member and fixity model was used in the analysis and design of this truss.

LOAD CASE(S) Standard

COMMONWEALTH OF VIRGINIA
REPAIR
JAMES H. FLETCHER
June 16, 2016
No. 26829
PROFESSIONAL ENGINEER

"Perry Style"

24 Chesdin Harbor

Your next home is right here.

Finer Homes
We build your dreams

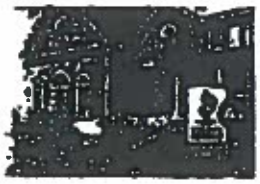

11-17-06

INFO LINE
(804) 748-7878

P.O. Box 1080
Chesterfield, VA 23832

Email:
sales@finerhomesinc.net
Website:
www.FinerHomesInc.net

FINER HOMES NEIGHBORHOODS

AUTUMN GROVE
BELLSHIRE
BENDAHL VALLEY
CHESDIN HARBOR
CLAY POINTE
COLLINGTON
HARPERS MILL
THE HIGHLANDS
WILLOW CREEK
WINDEMERE

Front Door 3° LH Craftsman w/side lites + transom Full Glass No Gets

Back Door 2⁸ 15-Lite LH Prairie

Garage 2⁸ 9-Lite LH Prairie 2x6 wall

Garage to have 2⁸ 6-Panel RH

Family (2) 2⁴x5° SH
(1) 2⁴x4⁶ Triple SH

Nook (1) 2⁴x4⁶ Twin SH

Kitchen (1) 3°x3° Casement RH
(2) 3°x1° Transom

Dining (1) 2⁴x5° SH
(1) 2⁴x5° Twin SH

Garage (1) 2⁴x5° Triple SH

Master (2) 3°x5° SH
(1) 4°x1° Transom

?

Bed 2 + 3 (3) 3°x5° SH

Bed 4 (1) 2⁴x4⁶ Twin DH

Closet (1) 2⁴x4⁶ SH Twin

Sitting (1) 2⁴x4⁶ SH

Gable (1) 2°x3° SH

Department of Professional & Occupational Regulation
Investigative File Checklist/Review

Assigning Supervisor: Tackett Region: SCMA

File Number: 2017-00867 Board: Contractors Inv Assigned: Dunsing

Date Docketed: 10/6/16 Date Sup Rec'd: 11/30/16 Date Assigned Inv: 12/12/16

Date Inv Due: 2/24/17 Date Inv Completed: 3/10/17 * Date Sup Rev'd: 3/10/17

Complainant: Leah Thorpe Respondent: Finar Homes Inc

Type of Case: ☑ Regulatory ☐ Unlicensed Date UL Statute of Limitations Expires:

Pending case(s) for this Respondent? ☑ No ☐ Yes If yes, Status: ☐ INV ☐ CO ☐ ADJ

License Status: ☐ None License #: 2701023961 Class A
☑ Current Expiration date: 12/31/17 Lapse date: ☐ Currently Suspended

Supervisor Analysis of Complaint:

R built a home for C. During the construction, C noticed that trusses that were installed did not match original engineer drawings that had been approved by Chesterfield County. It appears that R obtained repair drawings by another engineer (Fletcher) that really were just a match to the work that had been performed

Chesterfield County filed a NOV and C has appealed the County's decision regarding the trusses

Possible violation of B.33 - What is status of appeal?
* Will need to interview all engineers and Chesterfield County *

Initial File Review by Investigator:
Violations (If complaint is proven to be true, what law or regulation is violated; be specific.)

Investigative Plan of Action, Interviews, and Evidence Needed:

(Attach Separate Sheet if Necessary)

Complainant Contact:

Date: _____ Contact Numbers: 218-8493

Interviewed? ☐ No ☑ Yes Date: _____ Method of Interview: ☐ In Person ☑ By Phone

Notes/Additional Documents/Information Needed

12/20/16 - Left v/m for C
12/21/16 - Interview
2/9/17 - Spoke to C. Gave her update

Site Visit Conducted? ☐ N/A ☐ No ☐ Yes Date: _____ Photos Taken? ☐ No ☐ Yes

Respondent Contact:

Date: _____ Contact Numbers: _____

Interviewed? ☐ No ☑ Yes Date: _____ Method of Interview: ☑ In Person ☐ By Phone

Notes/Additional Documents/Information Needed

1/30/17 - Interview
3/9/17 - Left v/m - closing file

Allegation Letter Sent to Respondent? ☐ No ☐ Yes Date: _____ *Response Due Date:* _____

Contact with Principal Broker: ☐ By Phone ☐ In Person ☐ In Writing Date: _____

Attempts to Locate Respondent if Not at Address of Record: ☐ Directory Assistance ☐ Internet ☐ Building Permit

☐ SCC ☐ DMV ☐ Post Office ☐ Local Business License ☐ Other _____

Additional Addresses Found/Source: _____

Additional Information:

Proper Class? ☐ No ☐ Yes Proper Specialty/Classifications? ☐ No ☐ Yes

Other license(s) held by Respondent:

Board: _____ Number _____ Status? _____ ☐ Docket New Case

Board: _____ Number _____ Status? _____ ☐ Docket New Case

Board: _____ Number _____ Status? _____ ☐ Docket New Case

Building Official Form Mailed? ☐ N/A ☐ No ☐ Yes Date: _____

Witnesses Interviewed:

Name: _____ Title: _____ Date: _____ ☐ In Person ☑ By Phone

2/10/17 - called Fletcher. Voice mailbox is full.
Emailed Fletcher a copy of the complaint.

2/13/17 - Interview

3/9/17 - emailed Fletcher closing file.

Name: _____ Title: _____ Date: _____ ☐ In Person ☐ By Phone

Dunsing, Sharon (DPOR)

From: Clements, Ron <ClementsRo@chesterfield.gov>
Sent: Tuesday, December 27, 2016 11:54 AM
To: Dunsing, Sharon (DPOR)
Subject: Thorpe case update

Sharon,

It was a pleasure to meet and speak with you this morning. I just got off the phone with Mr. Holt with Finer Homes. Today they removed the section of driveway slab and should have it re-poured and ready for inspection tomorrow (12-28-16). Tomorrow they are also re-doing the incorrect truss cord repair that we discussed per the detail from Mr. Lassiter P.E. So hopefully tomorrow afternoon I will be able to say those two issues have been corrected.

Thanks,
Ron

Ron Clements | Assistant Director
Chesterfield Building Inspection Department
Safe construction from the ground up

(804) 751-4183 | www.chesterfield.gov/bi/
9800 Government Center Parkway, Chesterfield, VA 23832-0040

Dunsing, Sharon (DPOR)

From: Clements, Ron <ClementsRo@chesterfield.gov>
Sent: Tuesday, December 27, 2016 2:40 PM
To: Dunsing, Sharon (DPOR)
Subject: RE: Thorpe case update

Below is the comment that was entered into the permit notes as a corrections required structural site inspection dated 12-27-16:

> On December 16, 2016 I (Ron Clements) performed a structural inspection of a truss web member that had been damaged. This defect was discovered after the issuance of this permit and the repair was added to the scope of work for this permit. The repair was designed by Frank Lassiter P.E. with Mitek/Trenco. The field repair did not match the Lassiter design. On 12-16-16 I left a voice mail with Greg Holt of Finer Homes to discuss the error in the repair. On 12-19-16 Mr. Holt returned the call and I explained the problem and asked Mr. Holt to let me know how he would fix the repair. On 12-22-16 I left a voice mail with Greg Holt to follow up and find out what he planned to do. On 12-27-16 Mr. Holt called me and informed me that he was going to remove the first repair and re-repair the web member per the Lassiter design. The repair is scheduled for 12-28-16.

It should be available on the Web late this afternoon.

Thanks,
Ron

From: Dunsing, Sharon (DPOR) [mailto:Sharon.Dunsing@dpor.virginia.gov]
Sent: Tuesday, December 27, 2016 2:11 PM
To: Clements, Ron
Subject: RE: Thorpe case update

Thank you for the additional information. It was nice to meet with you. I really appreciate your help!

Sharon Dunsing
Investigator
Regulatory Programs and Compliance Section
Department of Professional and Occupational Regulation
804-356-4404
866-325-4939 FAX

From: Clements, Ron [mailto:ClementsRo@chesterfield.gov]
Sent: Tuesday, December 27, 2016 11:54 AM
To: Dunsing, Sharon (DPOR)
Subject: Thorpe case update

Sharon,

It was a pleasure to meet and speak with you this morning. I just got off the phone with Mr. Holt with Finer Homes. Today they removed the section of driveway slab and should have it re-poured and ready for inspection tomorrow (12-28-16). Tomorrow they are also re-doing the incorrect truss cord repair that we discussed per the detail from Mr. Lassiter P.E. So hopefully tomorrow afternoon I will be able to say those two issues have been corrected.

Thanks,

Inspection Results

INSPECTION RESULTS
Permit#: 2016129-049 Address: 16300 LONGLANDS RD Subdivision: HARPERS MILL Lot Number: 010

CHOOSE INSPECTION CATEGORY
Inspection Category: Building

INSPECTION CONFIRMATION NUMBER	DETAILS	INSPECTION NOTES
INSP16124051	Inspection Type: Structural Site Visit Inspection Sequence: 1 Inspection Results: Corrections Required Inspection Date: 12/9/2016 2:13:57 PM Reinspection Fee Charged: N Inspector's Name: Chris W. Davis Inspector's Phone Nbr: 8047967012	12/9/16 A site visit was performed by Ron Clements and Chris Davis on 12/8/16. An additional site visit performed by Ron Clements, Chris Davis and Jeff Brooks on 12/9. Inspections were made to update the permit as to what items have been completed and to determine outstanding issues and what is needed to complete this permit. 1. The HVAC system was removed and reinstalled in order to make the repairs to the foundation wall. The reinstallation was inspected and approved by plumbing and mechanical supervisor Jeff Brooks. 2. Sealing floor for bathtub drain cutout has been completed, inspected and approved. 3. Repair to joist notch for the bathtub drain cut out has been repaired, inspected and approved by RC and CD. Note: approval from design engineer Charles Toney still pending. 4. Foundation bearing wall repair has been repaired, inspected and approved by RC and CD. Note: approval from design engineer Charles Toney still pending. 5. Final sealing/ insulation of foundation bearing wall and permanent connection of the HVAC return and support of gas lines still pending inspection by BI. 6. Repair of driveway has not been completed pending adequate weather to replace concrete. BI approval still pending. 7. The gable truss has been repaired, inspected and approved by RC and CD. Note: approval from design engineer Charles Toney still pending. 8. HVAC support has been repaired and inspected by RC and CD per the Lassiter, P.E. design. Approval pending adding nail and screw to the HVAC support platform. 9. The gas line to the fireplace has been sealed and inspected and approved by RC and CD. Pending Items Summary 1. Final approval documentation from Toney, P.E. on his designed repairs. 2. Submittal of an engineered design and performance of the repair for the damaged truss chord. 3. Nail and add screw to the HVAC support platform 4. Completion of the driveway repair and inspection by BI. 5. Final inspection by BI of the foundation wall sealing, permanent connection of the return duct and support of gas pipe. At the Thorpe's request we observed a 2X member attached to a truss and determined it was not structural in nature but rather a "nailer" added to attach the roof sheathing. No further action is warranted.
INSP16119343	Inspection Type: Structural Site Visit Inspection Sequence: 2 Inspection Results: Corrections Required Inspection Date: 12/27/2016 2:40:28 PM Reinspection Fee Charged: N Inspector's Name: Ron Clements Inspector's Phone Nbr: 8047514163	On December 16, 2016 I (Ron Clements) performed a structural inspection of a truss web member that had been damaged. This defect was discovered after the issuance of this permit and the repair was added to the scope of work for this permit. The repair was designed by Frank Lassiter P.E. with Mitek/Treusco. The field repair did not match the Lassiter design. On 12-16-16 I left a voice mail with Greg Holt of Fizer Homes to discuss the error in the repair. On 12-19-16 Mr. Holt returned the call and I explained the problem and asked Mr. Holt to let me know how he would fix the repair. On 12-22-16 I left a voice mail with Greg Holt to follow up and find out what he planned to do. On 12-27-16 Mr. Holt called me and informed me that he was going to remove the first repair and re-repair the web member per the Lassiter design. The repair is scheduled for 12-28-16.

INSPECTION CONFIRMATION NUMBER	DETAILS	INSPECTION NOTES
INSP16120318	Inspection Type: Structural Site Visit Inspection Sequence: 3 Inspection Results: Corrections Required Inspection Date: 12/29/2016 4:04:58 PM Reinspection Fee Charged: N Inspector's Name: Ron Clements Inspector's Phone Nbr: 8047514163	On 12-29-16 Ron Clements performed an inspection of the driveway repair, and truss web member re-repair to correct the incorrect repair noted on the 12-16-16 structural site inspection. The truss web member was repaired in accordance with the county approved engineering detail from Mr. Lassiter P.E. dated 12.12.16. The truss repair is approved. A section of driveway concrete slab (left side facing the garage door) was removed and re-poured to improve drainage away from the garage door opening. An agreement was reached between Fizer Homes, the Thorpes and Chesterfield BI to provide as much fall as possible understanding that 2% grade was not achievable with replacement of one section of the driveway. It had rained the morning of the inspection and no water had run into the garage. The new slab section did have a slope away from the garage door for the first few feet away from the door that leveled of as the new slab section transitioned to the remaining slab. The new slab is approved with the caveat that if the Thorpes find that water does drain into the garage in the next couple of significant rain events Fizer Homes may need to re-evaluate and correct the drainage. Pending Items Summary 1. Final approval documentation from Toney, P.E. on his designed repairs. (Ron Clements requested this via phone call to Mr. Hoh on 12-28-16) 2. Final inspection by BI of the foundation wall sealing, general condition of the crawl space, permanent connection of the return duct and support of gas pipe. 3. Inspection of repairs/reinstallation of damaged duct work under the house. The Thorpes are having this condition independently evaluated and final resolution of this item is pending direction from the Thorpes.

Return to Permit Details New Permit Data Search

INVESTIGATOR DOCUMENTS

In early 2015, C purchased a "spec" house from Finer Homes. C paid $4,000.00 to have Finer Homes build a walk-up attic.

3/20/15 – Frank Lassiter drew the truss plans. Lassister is an architectural engineer for MiTek, the truss manufacturer.

4/10/15 – foundation inspection passed

On 4/18/15, C noticed that the trusses Finer Homes had installed were not correct. Finer Homes said they could fix the problem.

Padding was done. The B.O does not require a sealed design for truss padding so no design was requested or required by the B.O. at the time of the framing inspection.

5/18/15 – framing inspection passed

On 6/30/15, during the walk-thru, C asked R for the load limits on the attic. 6/30/15 – C.O. was issued.

They did not receive a copy of the truss drawings until May 2016. It was then when they realized the repair involved "padding up of the trusses".

The Thorpes raised the truss padding issue with Finer Homes. Finer Homes took pictures of the padding framing to Fletcher for approval of the design.

6/8/16 – Lassiter stamped drawing of "repair" needed.

6/16/16 – Fletcher stamped drawing.

In June 2016, C contacted Ron Clements because they were concerned about the walk-in attic because the repair deviated from Lassiter's drawings and MiTek's installation requirement.

Clements told C that the truss repair was acceptable and not a code violation.

C then brought other issues to the B.O.'s attention resulting in a letter of defect being issued.

8/3/16 - B.O. issues a letter of defect

9/16/16 – B.O. issues a 2nd letter of defect for other defects

11/29/16 – R obtains a building permit to repair defects

C asked for a hearing to dispute the B.O.'s position that the attic truss repair is not a Code violation. The Chairman ruled in favor of the B.O.'s office favor. C filed an appeal and lost.

11/30/16 – C's appeal denied by B.O.'s office

File Report

2017-00867 **Section:** Disciplinary **Priority:** 0

Main Complainant

LEAH THORPE

Home :

16300 LONGLANDS ROAD

CHESTERFIELD, VA 23832

Work Phone: 804 - 378 - 2480

Current ☑ Licensee ☐ Mailing ☑

Location of Offense ☐ Job Site ☐

Email/Internet Address: leahbthorpe@gmail.com

Main Respondent 27 1 23961 A Active

FINER HOMES INC

DPOR Address : PO BOX 1080

CHESTERFIELD, VA 23832

Current ☑ Licensee ☑ Mailing ☐

Location of Offense ☐ Job Site ☐

Email/Internet Address:

File Summary:

First Violation Contract ☐ **Date Of Offense:** 06/01/2016 **Docketed:** 10/06/2016

Criminal Action ☐ **Compensation Amount:** **Closed:** 03/09/2017

Investigator: SHARON DUNSING
Region: South Central
Stage: Investigations
Status: Closed
License Type: 2701 Class A Contractor
Class: Professional conduct
Findings: Closed by Staff - Insufficient Evidence

File Report

2017-00867 **Section:** Disciplinary **Priority:** 0

Main Complainant

LEAH THORPE

Home :

16300 LONGLANDS ROAD

CHESTERFIELD, VA 23832

Email/Internet Address: leahbthorpe@gmail.com

Work Phone: 804 - 378 - 2480

Current ☑ Licensee ☐ Mailing ☑

Location of Offense ☐ Job Site ☐

Main Respondent 27 1 23861 A Active

FINER HOMES INC

DPOR Address : PO BOX 1090

CHESTERFIELD, VA 23832

Email/Internet Address:

Current ☑ Licensee ☑ Mailing ☐

Location of Offense ☐ Job Site ☐

File Summary:

First Violation Contract ☐ Date Of Offense: 06/01/2016 Docketed: 10/06/2016

Criminal Action ☐ Compensation Amount: Closed: 02/14/2017

Investigator: SHARON DUNSING

Region: South Central

Stage: Investigations

Status: Closed

License Type: 2701 Class A Contractor

Class: Professional conduct

Findings: Closed by Staff - Insufficient Evidence

Dunsing, Sharon (DPOR)

From:	Leah Thorpe <leahbthorpe@gmail.com>
Sent:	Friday, February 24, 2017 7:51 PM
To:	Dunsing, Sharon (DPOR)
Subject:	Fwd: Complaint

Ms. Dunsing:

The opinions of Frank Lassiter and Jesse Wastler regarding the way our trusses were altered were in my original complaint. They both saw Mr. Fletcher's drawing but their opinions were based on the picture of the actual truss modification. Mr. Fletcher's "repair" drawing is simply an "as built" drawing of exactly what was done so it would be logical to infer that they would object to it. Mr. Wastlers report is sealed. Mr. Lassiter, who is the truss designer, wrote me an email telling me to have Structural Technologies issue a repair drawing for the trusses. Structural Technologies told me they were getting the drawing from MiTek (Mr. Lassiter). Industry standard is to have the original truss designer do the repair drawings but according to you Structural Technologies sent Mr. Fletcher a PDF of the truss and a picture of the modification and had him do the "repair". They also told Frank Lassiter not to talk to me again.

According to the truss manufacturers that I talked to, normal procedure is to send parameters, or descriptions of damage or intended modifications to the original truss designer and then they can pull up the particular truss in the computer program that is used to analyze loads and generate a repair. One truss manufacturer that I visited actually had a truss design by Frank Lassiter on the screen. They draw the trusses they need for a particular building on the same MiTek software that Mr. Lassiter uses. They then electronically transmit the parameters and Mr. Lassiter inputs them into his system and generates a drawing specifying where the metal gusset plates need to be pressed on and how big they should be and he seals the drawing.

If you do not have Mr. Lassiters email or the sealed report from Systematic Engineering (Mr. Wastler) please let me know and I will send them again. Thank you.

Leah Thorpe

Sent from my iPad

Begin forwarded message:

> **From:** "DPOR: Complaint Analysis (DPOR)" <complaintanalysis@dpor.virginia.gov>
> **Date:** October 3, 2016 at 9:57:45 AM EDT
> **To:** Leah Thorpe <leahbthorpe@gmail.com>
> **Subject: RE: Complaint**
>
> The complaint you filed was received by the Department on October 3, 2016, however no file number has been assigned at this time. Please allow five to seven business days for the complaint to be docketed. Thereafter, the complaint will be prepared for an initial review. Licensing information will be verified and a complaint history, if any, will be compiled for the individual and the firm you named on the complaint form. Sometimes during an initial review, analysts may find it necessary to contact you in writing for clarification of specific points in your summary or to request additional information.

Gmail

Leah Thorpe <leahbthorpe@gmail.com>

Phone conversation

4 messages

Leah Thorpe <leahbthorpe@gmail.com> Fri, Feb 24, 2017 at 11:45 AM
To: "Dunsing, Sharon (DPOR)" <Sharon.Dunsing@dpor.virginia.gov>

Good Afternoon Ms. Dunsing:

I just wanted to email you and make sure that I understood the information you gave me in our phone conversation this morning. I'll just list the information you gave me in list form to try to avoid a long e-mail.

Alan McMahan called you and told you that our appeal hearing had been postponed until 4/21/17. MS. DUNSING CALLED MR. MCMAHAN

You were waiting for the results of the 2/17/17 appeal hearing to decide whether to continue or close my complaint against James Fletcher.

When you talked to James Fletcher he told you that Structural Technologies had given him a copy of the truss drawing and a picture of the modification.

The information you have on file says that Mr. Fletcher is a sole proprietor and his business is Fletcher and Associates which I reported in my complaint did not have a working number.

You called me on 2/9/17 after you had interviewed Greg Holt and Ron Clements and were ready to close the investigation because Mr. Clements said the truss modification was not a code violation so the drawing did not really matter. You had not yet interviewed Mr. Fletcher.

You emailed me on 2/14/17 and said that you had interviewed Mr. Fletcher on 2/13/17 and the investigation was continuing but the final determination would not be made before our appeal hearing on 2/17/17 and that you hoped to have an update for me in about 10 days.

I will get a letter telling me when you have concluded the investigation but if I want the details of the investigation I have to file a FOIA request.

You gave me the following number in case I wanted to contact Mr. Fletcher myself. 757-508-3156

You have not talked to Structural Technologies.

Gmail

Leah Thorpe <leahbthorpe@gmail.com>

Information requested

Tackett, Ann (DPOR) <Ann.Tackett@dpor.virginia.gov>
To: Leah Thorpe <leahbthorpe@gmail.com>

Wed, Mar 29, 2017 at 2:44 PM

Mrs. Thorpe:

Thank you for sending the additional information. I have requested a new file to be opened against Mr. Fletcher and will send you the case number once I receive the file.

Ann S. Tackett

Investigations Supervisor

Department of Professional and Occupational Regulation

Regulatory Programs and Compliance

(804) 356-4190 Cell

(804) 403-3262 Fax

ann.tackett@dpor.virginia.gov

Governmental email is generally subject to disclosure pursuant to the Virginia Freedom of Information Act. However, if you have received this message in error, please notify the Sender and delete the message as well as all attachments.

From: Leah Thorpe [mailto:leahbthorpe@gmail.com]
Sent: Monday, March 27, 2017 2:34 PM
To: Tackett, Ann (DPOR)
Subject: Information requested

[Quoted text hidden]

CHAPTER 2
RESPONSIBILITIES IN THE DESIGN PROCESS INVOLVING METAL PLATE CONNECTED WOOD TRUSSES

2.1 PURPOSE

The purpose of this chapter is as follows:

2.1.1 To define and draw attention to the typical duties and responsibilities of the Truss Manufacturer, Truss Designer, Owner, Building Designer and Contractor so that all parties have an understanding of the typical division of professional responsibilities with respect to wood Trusses. This will result in safer, more effective and efficient use of Trusses, and more economical Buildings overall.

2.1.2 To provide requirements to the Owner, Building Designer and Contractor on matters related to the use of Trusses.

2.2 CONTRACTUAL AGREEMENTS

The provisions of Chapter 2 are intended to apply where no specific contractual relationship exists between the parties addressed herein, pertaining to Design Responsibilities. This section is not intended to take precedence over contractual relationships developed between any of the parties involved in a particular construction project.

2.3 DEFINITIONS

2.3.1 *Architect:* Any Licensed Design Professional practicing architecture who designs all or a part of the Building Structural System and/or who produces all or part of the Construction Documents and which may include all or part of the Structural Design Documents.

2.3.2 *Building:* Any structure used or intended for supporting or sheltering any use or occupancy.

2.3.3 *Building Designer:* The Owner of the Building or the individual or organization (including either an Architect or Engineer or the Contractor) that contracts with the Owner for the design of the Building Structural System and/or who produces the Structural Design Documents.

2.3.4 *Building Structural System:* The completed combination of Structural Elements, Trusses, connections and systems, which serve to support the Building's self weight, the applicable live load(s), and environmental loads.

2.3.5 *Construction Documents:* Written, graphic and pictorial documents, including the Structural Design Documents, prepared or assembled for describing the design, location and physical characteristics of the elements of a project necessary for obtaining a permit and constructing a building.

2.3.6 *Contract:* A legally recognized document between two or more parties that includes the agreement between the Truss Manufacturer and its customer which sets forth the terms and conditions and scope of responsibilities applicable to the Truss Manufacturer.

2.3.7 *Contractor:* The Owner of the Building or the individual or organization who contracts with the Owner and is responsible for the construction of the Building Structural System in accordance with all Legal Requirements. The term "Contractor" shall include those subcontractors who have a direct contract with the Contractor to perform all or a portion of the storage, handling, installation, and bracing (temporary and permanent) of the Trusses.

2.3.8 *Conventional Light-frame Wood Construction:* A type of construction whose primary structural elements are formed by a system of repetitive wood-framing members. This includes wood Truss construction.

2.3.9 *Engineer:* Any Licensed Design Professional practicing engineering who designs all or a part of the Building Structural System and/or who produces all or a part of the Structural Design Documents.

2.3.10 *Jurisdiction:* The governmental unit that has adopted this standard under due legislative authority.

2.3.11 *Legal Requirements:* Applicable provisions of all statutes, laws, rules, regulations, ordinances, codes, or orders of any governmental authority or Jurisdiction of the United States of America, any state, and any political subdivision or quasi-governmental authority or Jurisdiction of any of the same, including, but not limited to, departments, commissions, boards, bureaus, agencies, counties, municipalities, provinces, and other instrumentalities.

2.3.12 *Local Building Official*: The officer or other designated authority charged with the administration and enforcement of the applicable building code, or a duly authorized representative, who in accordance with the Legal Requirements may impose requirements on Truss Manufacturers and Truss Designers relating to the Trusses and the Truss Submittals.

2.3.13 *Owner:* The individual or organization who owns the Building, and: (a) either designs and prepares, or retains the Building Designer to design and prepare, the Building's Structural System and the Structural Design Documents; and (b) either constructs, or retains the Contractor to construct, the Building's Structural System.

2.3.14 *Registered Design Professional:* An individual who is registered or licensed to practice their respective design profession as defined by the statutory requirements of the professional registration laws of the state or Jurisdiction in which the project is to be constructed.

2.3.15 *Structural Design Documents*: Written, graphic and pictorial architectural or structural documents, specifications and addenda prepared or assembled for the overall construction of the Building Structural System, which are part of the Construction Documents.

2.3.16 *Structural Element:* A single joist, rafter, beam, or other structural member (not including the Trusses) designed by others and supplied for the Building Structural System by either the Truss Manufacturer or others.

2.3.17 *Structural Element Submittals:* Documentation relating to the Structural Elements that are supplied by the Truss Manufacturer, if required by the Contract, to the Local Building Official, Owner, Building Designer and/or Contractor for their review and/or approval.

2.3.18 *Truss:* An individual metal plate connected wood component supplied for the Building Structural System.

2.3.19 *Truss Design Drawing*: The written, graphic and pictorial depiction of an individual Truss.

2.3.20 *Truss Designer*: The individual or organization responsible for the design of Trusses.

2.3.21 *Truss Manufacturer*: An individual or organization engaged in the manufacturing of Trusses.

2.3.22 *Truss Placement Diagram:* The illustration supplied by the Truss Manufacturer identifying the location assumed for each Truss, which references each individually designated Truss Design Drawing.

2.3.23 *Truss Submittals*: The Truss Design Drawings, and the Truss Placement Diagram if required by the Contract, submitted by the Truss Manufacturer to the Local Building Official, Owner, Building Designer and/or Contractor for their review and/or approval.

2.4 REQUIREMENTS OF BUILDING OWNER, AND QUALIFICATIONS OF BUILDING DESIGNER AND CONTRACTOR

The Owner shall be responsible to comply with any requirements from a Jurisdiction that the design and/or construction of a building be performed by a specially qualified person, such as a Registered Design Professional or a Contractor with a specific type of license. The Owner shall be responsible for all matters of the design and construction of the Building Structural System except as defined in this

chapter and any applicable contractual agreement.

2.5 BUILDING STRUCTURAL SYSTEM DESIGN DOCUMENTS

2.5.1 The Building Designer, through the Structural Design Documents, shall provide that the Structural Elements and Trusses shall not be subjected to adverse influences including, but not limited to moisture, temperature, and corrosive chemicals and gases. This provision shall specifically include notice for the Truss Designer of environments expected to result in wood moisture content exceeding 19 percent, and temperatures and/or corrosion potential that are unusually high relative to typical wood buildings.

2.5.2 The Building Designer, through the Structural Design Documents shall provide information sufficiently accurate and reliable to be used for facilitating the supply of the Structural Elements and for developing the design of the Trusses for the Building, and shall provide the following:

2.5.2.1 All Structural Element and Truss orientations and locations;

2.5.2.2 Information to fully determine all Truss profiles;

2.5.2.3 All Structural Element and Truss bearing conditions;

2.5.2.4 The location, direction, and magnitude of all dead and live loads applicable to each Structural Element and Truss including, but not limited to, loads attributable to: roof, floor, partition including any directions other than given in section 6.2.2.1, mechanical, fire sprinkler, attic, storage, rain loads and ponding, design wind speed and exposure category, snow, snow drift, unbalanced snow load, and seismic forces;

2.5.2.5 All Structural Element and Truss anchorage designs required to resist uplift, gravity, and lateral loads;

2.5.2.6 Allowable vertical and horizontal deflection criteria and any specific criteria per section 6.1.3;

2.5.2.7 Proper transfer of design loads affecting the Structural Elements and Trusses;

2.5.2.8 Adequate connections between Trusses and between Structural Elements, including Truss to Structural Element connections, but not Truss to Truss girder connections except such connections that are excluded from the scope of the Truss Designer's responsibilities.

2.5.2.9 Permanent bracing design for the Building, including bracing to resist wind, seismic, or other lateral forces, and permanent bracing for all Structural Elements and Trusses. The permanent bracing design shall incorporate the continuous lateral chord and web member bracing that is designated on the individual Truss Design Drawings into the overall bracing for the entire Building Structural System.

2.5.3 The Building Designer shall be responsible for the adequacy of the design of the Building Structural System or the adequacy of the Structural Design Documents. The Building Designer shall evaluate the effect of the Trusses and the Structural Elements supplied, on the Building Structural System.

2.6 CONSTRUCTION RELATED ITEMS

2.6.1 Truss Submittals and Structural Element Submittals, and any supplemental information provided by the Truss Manufacturer, shall be provided to the Contractor or the individual or organization responsible for the installation of the Trusses and Structural Elements.

2.6.2 The Building Designer shall be responsible for determining appropriate field storage, handling, and installation measures for the Trusses and Structural Elements. The Contractor, unless otherwise specifically assigned by Contract, shall determine the requirements of, and provide all materials for construction in accordance with the

Structural Design Documents. These requirements and materials for construction shall include all necessary items for safe construction, including design and installation of, adequate temporary bracing during construction for the Building Structural System.

2.6.3 The Contractor shall be responsible, unless otherwise assigned by Contract, to review or inspect Trusses delivered or to review and inspect Trusses after erection for any problems, including dislodged/missing connectors, cracked, dislodged or broken members, or any other damage that may impair the structural integrity of the Truss. In the event that damage to the Truss is discovered that would likely impair the structural integrity of the Truss, the Contractor shall be responsible to ensure that the Truss not be erected and that any area within the Building supported by any such Truss already erected shall be appropriately shored or supported to prevent further damage from occurring and shall remain clear and free of any load imposed by people, plumbing, electrical, mechanical, bridging, bracing, etc. until such field repairs have been properly completed. In the event of such damage and unless otherwise specified by Contract, the Contractor shall contact the appropriate design professional to determine an adequate field repair and the Contractor shall be responsible to construct any such field repair.

2.6.4 All Truss repairs shall be approved in writing by a Building Designer or a Truss Designer or other qualified person prior to the performance of the repair.

2.6.5 The Truss Manufacturer and Truss Designer are not responsible for, nor do the Truss Manufacturer and Truss Designer have control of, construction means, methods, techniques, sequences, procedures, programs and safety in connection with the handling, storing, installation and bracing of the Trusses. These topics are covered in the BCSI 1-03: *Guide to Good Practice for Handling, Installing & Bracing of Metal Plate Connected Wood Trusses*. The Truss Manufacturer and Truss Designer are also not responsible for the failure to carry out the construction work related to the Trusses and the Structural Elements in accordance with the handling and installation information and/or the Structural Design Documents.

2.6.6 The Truss Manufacturer and Truss Designer shall not be responsible for the design, materials, or installation of permanent bracing for the Building, including bracing for all or any of the Trusses and Structural Elements. The approximate location for, or the maximum spacing between, permanent lateral bracing of Truss members will be indicated on the Truss Design and it shall be the responsibility of the Owner to engage the Building Designer or others to specify how the permanent lateral bracing is to be anchored or restrained to prevent lateral movement of all Truss members together. Consideration shall be given to one of the following methods for providing this restraint or anchorage: (a) permanent diagonal bracing in the plane of the Truss members; or (b) other means when demonstrated by the Building Designer or other qualified person to provide equivalent lateral resistance.

2.7 TRUSS MANUFACTURER RESPONSIBILITIES

2.7.1 The Truss Manufacturer shall communicate the Truss design criteria and requirements from the Structural Design Documents and those requirements set forth in writing by the Owner, Building Designer or Contractor, to the Truss Designer.

2.7.2 A Truss Design Drawing is a substitute for the building code based prescriptive span tables used to select and apply structural elements in Conventional Light-frame Wood Construction.

2.7.3 The Truss Manufacturer shall supply a Truss design drawing, a Truss placement diagram or special detail drawings to the Contractor to document the location of special bearing conditions, permanent bracing, and orientation of Trusses, unless the provisions of Section 2.7.3.1 are followed.

2.7.3.1 In lieu of a Truss Design Drawing, Truss Placement Diagram or special detail drawings

being provided as specified in Section 2.7.2, the Truss Manufacturer shall ensure the following:

a) required bottom chord bearing parallel chord Trusses shall be clearly marked or configured in a manner which will avoid inverted installation, and shall permit visual verification or proper orientation after installation;

b) Trusses having bearing locations other than at the end or heel locations shall have bearing points clearly marked; and

c) Truss chord and web members that require lateral bracing to prevent lateral buckling (such as, but not limited to, top chords of piggyback Trusses, long compression webs, and bottom chords at cantilevers) shall be clearly marked to call attention to the need for such field bracing during and after installation.

2.7.3.2 Where required by Contract, Legal Requirements or the Local Building Official, the Truss Manufacturer shall provide Truss Design Drawing(s) sealed by a Truss Design Engineer (as defined in 2.8).

2.7.4 Where required by Contract, Legal Requirements or the Local Building Official, the Truss Manufacturer shall submit the Truss Submittals and Structural Element Submittals to the Local Building Official, Owner, Building Designer and/or Contractor for review and/or approval.

2.7.5 In preparing the Truss Submittals and the Structural Element Submittals, the Truss Manufacturer shall be permitted to rely on the accuracy and completeness of information furnished, in writing, by the Owner, Building Designer or Contractor, and by the Structural Design Documents.

2.7.6 The Truss Manufacturer shall manufacture the Trusses in accordance with the final Truss Design Drawings, using the quality criteria required by this standard.

2.7.7 Where required by the Contract, the Truss Manufacturer shall prepare the Truss Placement Diagram. The Truss Placement Diagram shall be permitted to include identifying marks for other products, including Structural Elements supplied by someone other than the Truss Manufacturer, so that they may be more easily identified by the Contractor during field erection. As the Truss Placement Diagram serves only as a guide for Truss installation and requires no engineering input, it does not require the seal of a Truss Design Engineer (as defined in 2.8).

2.7.8 The Truss Manufacturer shall determine the value for the quality control factor (C_q) to be used in the design of the metal plate connected wood Trusses (See Section 6.4.11). This value for C_q shall be provided to the Truss Designer, with evidence of conformance with Chapter 3 from an inspection agency or other means when required by 6.4.11.

2.8 TRUSS DESIGNER RESPONSIBILITIES

2.8.1 The Truss Designer shall prepare the Truss Design Drawings based on the truss design criteria and requirements set forth in writing by the Owner, Building Designer or Contractor, by the Structural Design Documents, and in conformance with the requirements set forth in this standard.

2.8.2 The Truss Designer shall be responsible for the single Truss design depicted on the Truss Design Drawing.

2.8.3 Repair designs shall be based on: Applicable wood engineering standards such as this standard, the *National Design Specification® for Wood Construction*, NDS® and other code recognized reports and standards; design loads specified in the Structural Design Documents, or otherwise specified in writing, and used in the preparation of the original Truss Design Drawing(s); the determination of forces and moments present at the repair location based on structural analysis; re-evaluation of all member stresses and deflections and joint designs (plating) for the repaired condition using this standard's design criteria; and the judgment of the engineer undertaking the repair.

Structural Building Components Association

Associate Members of TPI

Truss Repair and Modifications

Educational Presentation

SBCA

Introduction

- What is the difference between a Repair and a Modification?
  - Truss Repair: restoring a truss back to its original shape and strength in situations where damage has caused a change or a reduction in either.
  - Truss Modification: altering a truss profile, loading, and/or bearing conditions to fit a situation for which the original truss was not designed.
- This presentation will cover:
  - The fundamental principles behind Truss Repair
  - Steps for a successful Truss Repair

CODE VIOLATIONS

Duct work return material not installed properly – R303.2
Duct work return material does not have the proper R value R403.2.1
Supply duct kinked
Supply duct undersized R303.2
Return duct undersized R303.2
Bath tub not installed to manufacturer's instructions.
Missing insulation in crawl
Building Thermal envelope does not meet code – R402.4.1
Crawl space penetrations not sealed - R402.4.1.1
Trash and building materials left in crawl space.
Missing vapor barrier in crawl space
Split vertical truss chord - Structural
Cut joist under tub. Repair done without contacting supplier and now the suppliers warranty is void. - Structural
Driveway not sloped to code- - water getting in garage
Coil set still has tears in insulation
Wire penetrations through sub-floor and plenum not sealed.
Gable truss needs reinforcing - Structural
58 inch unsupported penetration in foundation on a bearing wall for HVAC duct - Structural
Large subfloor hole under tub
Heat pump upstairs-platform put in trusses - Structural
Gutter leaking left side above meter (improper shingle install)
Spigots loose/ not freeze protection
Thermostat cable through duct
Gas line draped over dryer duct.
Exterior door bent. Not sealing @top (I fixed-replaced door)
Door to garage and door from garage to house cracked – not installed per manufacturer's instructions. (Finer supplied new doors, Greg Thorpe painted and installed them))
Hole in master bath vent duct
Gas leak at meter
Stove installed improperly

> **917.1 Cooking appliances.** Cooking appliances that are designed for permanent installation, including ranges, ovens, stoves, broilers, grills, fryers, griddles and barbecues, shall be *listed*, *labeled* and installed in accordance with the manufacturer's installation instructions. Commercial electric cooking appliances shall be *listed* and *labeled* in accordance with UL 197. Household electric ranges shall be *listed* and *labeled* in accordance with UL 858. Microwave cooking appliances shall be *listed* and *labeled* in accordance with UL 923. Oil-burning stoves shall be *listed* and *labeled* in accordance with UL 896. Solid-fuel-fired ovens shall be *listed* and *labeled* in accordance with UL 2162.

Dishwasher installed improperly-would not drain

Bottom Chord Live Load

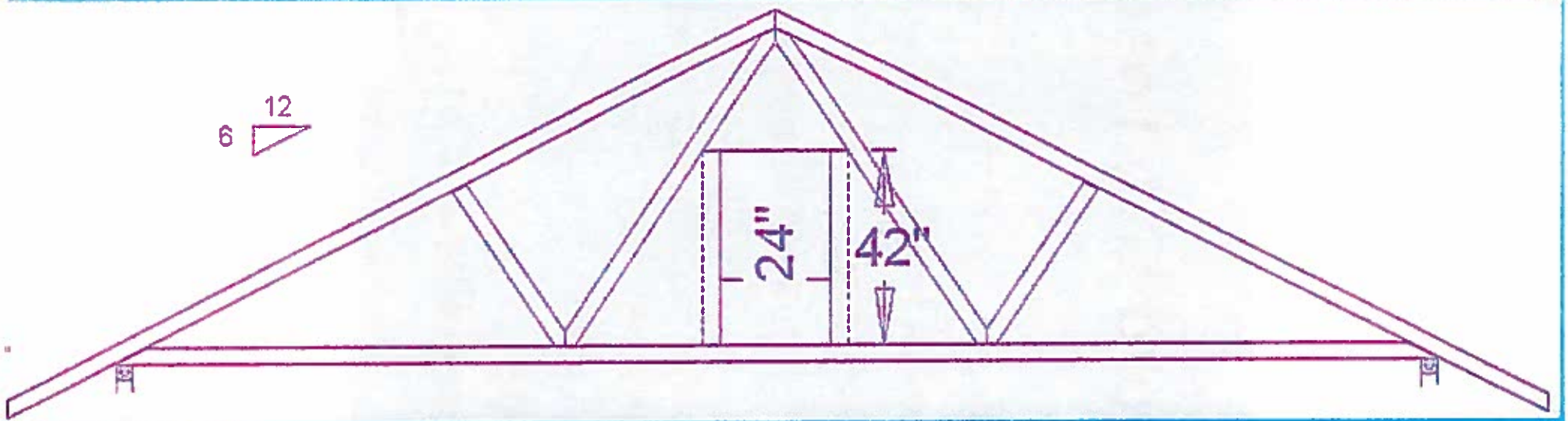

- 20-psf live load often referred to as BOCA load
  - Origin is in National Building Code (BOCA)
- Requires minimum clearance of 42" and minimum width of 24"
- Bottom chord pitch less than 2:12
- Concurrent with roof live load

Your "Everything" Team...
HTWBCG
Building Components Group Inc.
...we're there for you!

Bottom Chord Live Load

- Attics With Storage
  - Access by fixed stairs
  - 30-psf concurrent live load
- Attics With Limited Storage
  - Access only by scuttle opening or pull-down stairs
  - 42" clear height between bottom chord and web or top chord for a distance of 24"
  - 20-psf concurrent live load
- Attics Without Storage
  - 10-psf non-concurrent live load

Your "Everything" Team...
ITWBCG
Building Components Group Inc.
...we're there for you!

14 quick videos show you how to
Improve Your Skills. Get Better Results. Faster
Master your Construction Master Pro

Posted on October 01, 2011 7 Like 1 3

Beefing Up Attic Joists for Living Space

By Chris DeBlois

Q. *I need to convert an attic to livable space with minimal disruption to first-floor habitation. The existing ceiling joists are 2x6s, clear-spanning about 11 feet 3 inches. Rather than sistering in deeper members, which would involve moving wiring, can I stack new 2x6s on top of the existing ones? This creates a 2x12 joist depth, but will I achieve an actual structural benefit from stacking members? What if I gusseted them together at regular intervals?*

A. *Chris DeBlois, a structural engineer in Roswell, Ga., responds:* Yes, you can in fact achieve some structural benefit, depending on how you tie the upper and lower joists together. The next logical questions are: How much benefit and is it enough? And what else do you need to do to ensure the stability of the new floor system? That's where the answers get interesting.

The maximum structural improvement you can get by adding new 2x6s on top of the old ones is the same as the maximum you would get if you sistered them side by side - exactly double. As a frame of reference, a 2x12 has about twice the bending strength and four times the stiffness of the two 2x6s you'd get if you ripped it in half. Unfortunately, now that you're essentially stuck with the two 2x6s, there's no practical way to recapture the original strength and stiffness of the full-depth 2x12. The problem has to do with creating a "no slip" connection between the upper and lower pieces.

But you can still double the capacity of the existing 2x6s in the attic floor, so first let's make sure that's enough for your situation. My calculations tell me (assuming #2 southern yellow pine joists, which are common in my area) that 2x6s 16 inches on-center will span 9 feet 9 inches, with allowable deflection being the governing factor. If you double those joists, you can span 12 feet 3 inches.

To achieve this doubling effect in strength and stiffness, you will indeed need to gusset the upper and lower joists together. If we use strong enough gussets and fasteners, we know that the top and bottom joists will deflect by exactly the same amount when loaded. That's key to analyzing the behavior of the stacked framing.

I'd suggest you first run a continuous 1-by or 2-by plate across the ends of the existing joists to provide a stable base for the new joists. (That also gives you a fighting chance at a level floor. If you simply set the new joists on the old they probably won't mate well, and any slope in the old floor will translate through to the new.) Next, gusset the upper and lower 2x6s together with 2x4s or 3/4-inch plywood. Gussets on one side only can work, but I prefer gussets on both sides so the load is transferred concentrically, preventing twisting in the joists. I recommend three gusset pairs per joist at the quarter points - one

To Finish A
FREE SAMPLES
JLC Field
TO RESIDENTIAL CO
Schlu Systems
INNOVATIVE INSTALLATION FOR TILE AND

about every 3 feet. Where they connect to both the top and bottom joists, each gusset pair will transfer approximately 100 pounds - that's 50 psf of floor load times the 3-foot gusset spacing times the 16-inch joist spacing divided by the two joists. Use six 10d nails with plywood gussets, or six 16d nails with 2x4s, half into each 2x6 joist. That's conservative nailing in terms of the capacity of the fasteners, but it also keeps the gussets from twisting.

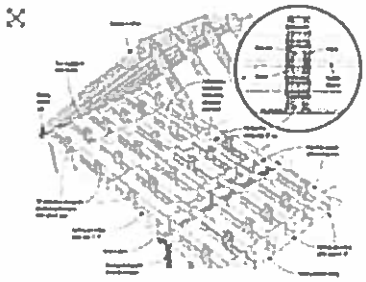

You may wonder how I decided on three sets of gussets per span. The more gussets you have, the more uniformly the load is shared from top to bottom; ideally, we'd like the joists to share the load equally. In this case, three gets us pretty close to a 50/50 split. The stress in the lower joist will be about 7.5 percent higher than that in the upper joist - not enough difference to justify more gussets. Let's say for comparison that you went nuts and used nine gussets per span. The lower joist would still have 1.3 percent more stress than the upper - too much work for not much improvement, in my book. By contrast, if you used only one gusset at midspan, the stress in the lower joist would be a whopping two-thirds higher. The problem in this scenario is that all the load in the lower joist is introduced right in the middle of the span, the worst place to put it. So that's why I chose three per span. It gets pretty close to splitting the load.

The last question I raised has to do with the stability of the floor system. Stacking joists is not nearly as stable as sistering, which braces the joists against twisting. Not so with stacked joists. Think of it like this: You can probably walk across the edge of a 2x6 joist, but if you stack the joists two high and try to walk across, your last name better be Wallenda. Blocking solves the problem. Put 2x8 blocks at the third points, set at the midheight of the assembly and bridging the horizontal joint between top and bottom joists. Toenail the blocks or end-nail through the joists to tie everything together. For slightly better bracing across the entire depth of the assembly, you could instead use 2x12 blocking or double 2x6 blocks, one layer for the top joists and one for the bottom. But 2x8s should work fine and will save labor and materials.

Finally, to simplify the analysis, I've ignored the fact that some of the load - namely, the weight of the ceiling - is actually applied directly to the bottom joists and won't be shared with the upper joists unless you remove and reinstall the ceiling (which is pretty much what you were trying to avoid in the first place). But this won't make much difference to the calculations or recommendations unless you have a very heavy plaster ceiling. If you do have an unusually large ceiling load - or an ornamental plaster ceiling you want to protect - you may need to consider doubling some of the new joists.

About the Author

Chris DeBlois

Advertisement

Schluter Systems
INNOVATIVE
INSTALLATION SYSTEMS
FOR TILE AND STONE

Keywords:

Subject:

Living Room Framing Flooring Walls Air Technology

JLC Field Guide:

Wood Flooring Dimensional Lumber Floors Floor Trusses Roof Trusses Subflooring

Residential Flooring Wall Framing Engineered Lumber Floors

More from JLC

Job	Truss	Truss Type	Qty	Ply	SAVANNAH W ROG & PART ATTIC	
25817	T-1	ROOF SPECIAL	9	1	Job Reference (optional)	E10085072

Structural Technologies, Dowell, VA 23047

7.640 s Apr 19 2016 MiTek Industries, Inc. Fri Dec 09 09:18:09 2016 Page 1

ID:NN,BGyXDZHd0w5QHrgvER7yOsfP-KehWsRg4Quz4aaMbXs1OByfa6ffQBOFbwAUfyAhS

1-0-0 7-1-15 13-10-4 21-0-0 28-1-12 35-5-7 41-10-0 47-0-0 48-0-0
1-0-0 7-1-15 6-8-5 7-1-12 7-1-12 7-3-11 6-4-9 5-2-0 1-0-0

REPAIR TO REPLACE DAMAGED WEB SECTION.

Scale = 1:90.7

REMOVE DAMAGED TOP SECTION OF WEB (5-17) FOR A MINIMUM OF 48" (ALL OF THE DAMAGED LUMBER SECTION MUST BE REMOVED AND THERE MUST BE A MINIMUM OF 36" OF GOOD LUMBER REMAINING AT THE BOTTOM SECTION OF THE WEB AND THE PLATES AT JOINT 17 MUST REMAIN FULLY EMBEDDED AND INTACT)
REPLACE REMOVED SECTION WITH 2 X 4 SPF NO 2 MATERIAL

*PREVIOUS REPAIR ON RIGHT END E9555866

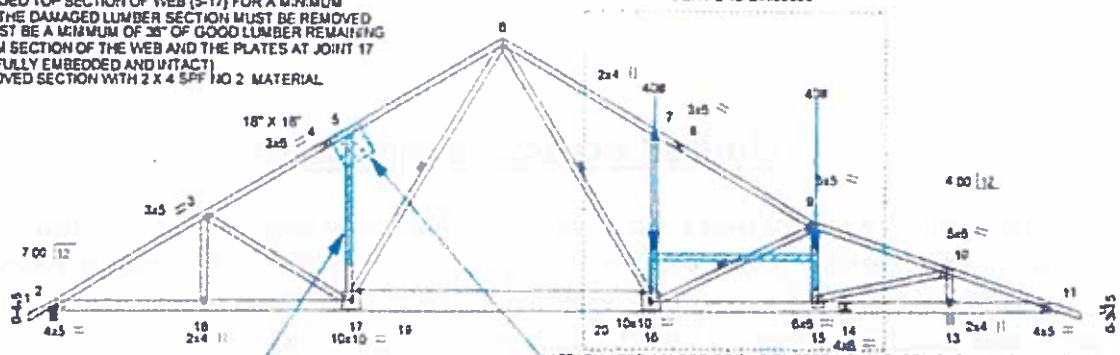

APPLY 2X4X4' SPF No 2 SCAB(S) TO EACH FACE OF TRUSS CENTERED ON SPLICE ATTACH WITH 10d (3" X 0 131") NAILS PER THE FOLLOWING NAIL SCHEDULE
2 x 4'S - 2 ROWS, 2 x 6'S AND LARGER - 3 ROWS SPACED @ 4" O C
STAGGER NAIL SPACING FROM FRONT FACE AND BACK FACE FOR A NET 2" O C SPACING IN THE TRUSS USE 3" MEMBER END DISTANCE

ATTACH 1/2" PLYWOOD OR OSB GUSSET (15/32" RATED SHEATHING 32/16 EXP 1) TO EACH FACE OF TRUSS WITH 10d (3" X 131") NAILS DRIVEN THROUGH BOTH SHEETS OF PLYWOOD AND CLINCHED PER THE FOLLOWING NAIL SCHEDULE
2 x 4's - 2 ROWS, 2 x 6'S AND LARGER - 3 ROWS SPACED @ 4" O C
NAILS TO BE DRIVEN FROM BOTH FACES STAGGER SPACING FROM FRONT TO BACK FACE FOR A NET 2" O C SPACING IN THE TRUSS USE 3" MEMBER END DISTANCE

7-1-15 13-10-4 28-1-12 35-5-7 41-10-0 47-0-0
7-1-15 6-8-5 14-3-8 7-3-11 6-4-9 5-2-0 5-0-0

Plate Offsets (X,Y)-- [2:0-3-4,0-1-3], [16:0-4-12,0-5-0], [17:0-4-12,0-5-0]

LOADING (psf)		SPACING-	2-0-0	CSI.		DEFL.	in	(loc)	l/def	L/d	PLATES	GRIP
TCLL	20.0	Plate Grip DOL	1.15	TC	0.98	Vert(LL)	-0.27	16-17	>999	240	MT20	244/190
TCDL	10.0	Lumber DOL	1.15	BC	0.76	Vert(TL)	-0.54	16-17	>918	180		
BCLL	0.0 *	Rep Stress Incr	YES	WB	0.76	Horz(TL)	0.09	13	n/a	n/a		
BCDL	10.0	Code IRC2009/TPI2007		(Matrix)							Weight: 336 lb	FT = 5%

LUMBER-
TOP CHORD 2x4 SP No.1 *Except* 9-12,1-4: 2x4 SP No.2
BOT CHORD 2x6 SP No 2 *Except* 16-17: 2x12 SP No 2
WEBS 2x4 SP No 3 *Except* 10-15: 2x4 SP No 2

BRACING-
TOP CHORD Sheathed.
BOT CHORD Rigid ceiling directly applied or 8-0-0 oc bracing
WEBS 1 Row at midpt 6-17, 6-16, 9-16

REACTIONS. (lb/size) 2=1907/0-4-0, 13=2417/0-4-0
Max Horz 2=-300(LC 4)
Max Uplift 2=-241(LC 6), 13=-410(LC 7)

Caroline Field County
Dept. of Building Inspection

FORCES. (lb) - Maximum Compression/Maximum Tension
TOP CHORD 1-2=0/33, 2-3=-3219/394, 3-4=-2768/342, 4-5=-2584/378, 5-6=-2764/513, 6-7=-2759/496, 7-8=-2556/351, 8-9=-2755/327, 9-10=-2645/252, 10-11=-423/645, 11-12=0/22
BOT CHORD 2-16=-330/2681, 17-18=-331/2686, 17-19=-50/1632, 19-20=-50/1632, 16-20=-50/1632, 15-16=-167/2483, 14-15=-560/439, 13-14=-560/439, 11-13=-560/439
WEBS 3-16=0/340, 3-17=-468/159, 5-17=-436/214, 6-17=-268/1323, 6-16=-240/1304, 7-16=-487/238, 9-16=-281/79, 9-15=-805/201, 10-15=-553/3103, 10-13=-2187/487

NOTES-
1) Unbalanced roof live loads have been considered for this design.
2) Wind: ASCE 7-05; 90mph; TCDL=6.0psf; BCDL=3.0psf; h=25ft; Cat. II; Exp B; enclosed; MWFRS (low-rise) gable end zone and C-C Exterior(2) zone; cantilever left and right exposed ; end vertical left and right exposed;C-C for members and forces & MWFRS for reactions shown; Lumber DOL=1.15 plate grip DOL=1.15
3) This truss has been designed for a 20.0 psf bottom chord live load nonconcurrent with any other live loads.
4) * This truss has been designed for a live load of 20.0psf on the bottom chord in all areas where a rectangle 3-6-0 tall by 2-0-0 wide will fit between the bottom chord and any other members, with BCDL = 10.0psf.
5) Provide mechanical connection (by others) of truss to bearing plate capable of withstanding 241 lb uplift at joint 2 and 410 lb uplift at joint 13.
6) "Semi-rigid pitchbreaks with fixed heels" Member end fixity model was used in the analysis and design of this truss.
7) Hanger(s) or other connection device(s) shall be provided sufficient to support concentrated load(s) 40 lb down and 9 lb up at 28-1-12, and 40 lb down and 9 lb up at 35-7-10 on bottom chord. The design/selection of such connection device(s) is the responsibility of others.
8) In the LOAD CASE(S) section, loads applied to the face of the truss are noted as front (F) or back (B).

COMMONWEALTH OF VIRGINIA
FRANK R. LASSITER
Lic. No. 034728
PROFESSIONAL ENGINEER

LOAD CASE(S) Standard
1) Dead + Roof Live (balanced) + Uninhab. Attic Storage: Lumber Increase=1.15, Plate Increase=1.15
Uniform Loads (plf)
Vert: 1-6=-60, 6-9=-60, 9-12=-60, 2-19=-20, 19-20=-60, 11-20=-20

December 12,2016

Continued on page 2

WARNING - Verify design parameters and READ NOTES ON THIS AND INCLUDED MiTek REFERENCE PAGE MII-7473 rev. 10/03/2015 BEFORE USE.
Design valid for use only with MiTek® connectors. This design is based only upon parameters shown, and is for an individual building component, not a truss system. Before use, the building designer must verify the applicability of design parameters and properly incorporate this design into the overall building design. Bracing indicated is to prevent buckling of individual truss web and/or chord members only. Additional temporary and permanent bracing is always required for stability and to prevent collapse with possible personal injury and property damage. For general guidance regarding the fabrication, storage, delivery, erection and bracing of trusses and truss systems, see ANSI/TPI1 Quality Criteria, DSB-89 and BCSI Building Component Safety Information available from Truss Plate Institute, 218 N. Lee Street, Suite 312, Alexandria, VA 22314.

TRENCO
818 Soundside Road
Edenton, NC 27932

Limited Access Storage Load

Often times, what the building code states is confusing at best. This is especially true when there are multiple footnotes describing when and where a load is to be applied. One such circumstance occurs with the attic limited access storage load, commonly referred to as the "42 inch live load" or "the BOCA load". Below is a quick summary of what the IRC states regarding this load:

Attics with limited access shall be designed to support 20 psf live load on the bottom chord of any truss "...with a web configuration capable of containing a rectangle 42 inches high or greater by 2 feet wide or greater..." This applies to areas that are accessible via a pull-down stairway or framed opening with a bottom chord pitch of less than 2/12 (IRC 2006, IRC2009), or an opening of 20 inches by 30 inches where there is at least 30 inches of clearance above the opening (IRC 2012). When the attic limited access live load applies, standard industry practice is to apply the live load concurrently with the greater of the actual imposed bottom chord dead load or 10 psf bottom chord dead load. This is required in certain editions of IRC.

When the live load is applicable, it is important to remember the exemptions to this loading requirement. The live load is not required when:

- The attic area is not accessible through a scuttle as described above.
- The 42 inch tall by 24 inch wide rectangle beneath the webbing does not align with adjacent web openings (less than 3 consecutive trusses with same open area).
- The bottom chord pitch is greater than 2/12
- The insulation depth is greater than the depth of the bottom chord.

Given that energy codes requires the use of insulation over livable spaces, it is likely that the 42 inch limited access live load will only be applicable to trusses over a non-insulated garage. Please also note that there is no "insulation exemption" in IBC. Of course, it is important to remember to check with local codes as many jurisdictions modify the requirements of this load. If you have any questions regarding the applicability of the attic limited access storage load, please feel free to contact your MiTek engineer.

AUGUST 1, 2016	STANDARD REPAIR DETAIL TO MODIFY TRUSS FROM TOP CHORD BEARING TO BOTTOM CHORD BEARING	MII-REP04

R

MiTek USA, Inc.
ENGINEERED BY
A MiTek Affiliate

NOTES:

1. THIS IS A SPECIFIC DETAIL TO BE USED ONLY FOR ITS ORIGINAL INTENTION OF PERMITTING THE REMOVAL OF THE TOP CHORD EXTENSION. THIS DETAIL REQUIRES THAT THE REMAINING PORTION OF THE TRUSS IS UNDAMAGED.
2. CUT OFF TOP CHORD EXTENSION WITHOUT DAMAGING OR CUTTING THE EXISTING PLATES.
3. NO OTHER MODIFICATIONS ARE PERMITTED.

TRUSS BEFORE MODIFICATION:

REFER TO INDIVIDUAL TRUSS DESIGN FOR PLATE SIZES AND LUMBER GRADES

TOP CHORD BEARING TRUSS EXTENSION

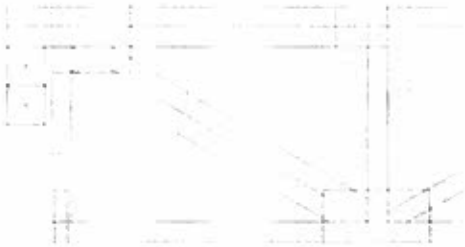

MODIFIED BEARING CONDITION:

500 LB. MAXIMUM WALL LOAD FROM ABOVE

REMOVE TOP CHORD BEARING EXTENSION

CONNECTOR PLATE MUST BE FULLY EMBEDDED AND UNDISTURBED

DO NOT OVERCUT

OLD BEARING LOCATION

NEW BEARING LOCATION

ALL OTHER FRAMING ELEMENTS ARE NOT SHOWN FOR CLARITY.

FEBRUARY 12, 2004	REPLACE A MISSING STUD ON A GABLE TRUSS	ED-REP15

Trenco, Edenton, North Carolina

ENGINEERED BY TRENCO
A MiTek Affiliate

1. THIS IS A SPECIFIC REPAIR DETAIL TO BE USED ONLY FOR ITS ORIGINAL INTENTION. THIS REPAIR DOES NOT IMPLY THAT THE REMAINING PORTION OF THE TRUSS IS UNDAMAGED. THE ENTIRE TRUSS SHALL BE INSPECTED TO VERIFY THAT NO FURTHER REPAIRS ARE REQUIRED. WHEN THE REQUIRED REPAIRS ARE PROPERLY APPLIED, THE TRUSS WILL BE CAPABLE OF SUPPORTING THE LOADS INDICATED.
2. ALL MEMBERS MUST BE RETURNED TO THEIR ORIGINAL POSITIONS BEFORE APPLYING REPAIR AND HELD IN PLACE DURING APPLICATION OF REPAIR.
3. THE END DISTANCE, EDGE DISTANCE, AND SPACING OF NAILS SHALL BE SUCH AS TO AVOID SPLITTING OF THE WOOD.
4. WHEN NAILING SCABS OR GUSSETS, THE USE OF A BACKUP WEIGHT IS RECOMMENDED TO AVOID LOOSENING OF THE CONNECTOR PLATES AT THE JOINTS OR SPLICES.
5. THIS REPAIR IS TO BE USED FOR SINGLE PLY TRUSSES IN THE 2X_ ORIENTATION ONLY.

REPLACE MISSING WEB WITH A NEW MEMBER OF THE SAME SIZE, GRADE, AND SPECIES AS THE ORIGINAL (CUT TO FIT TIGHT)

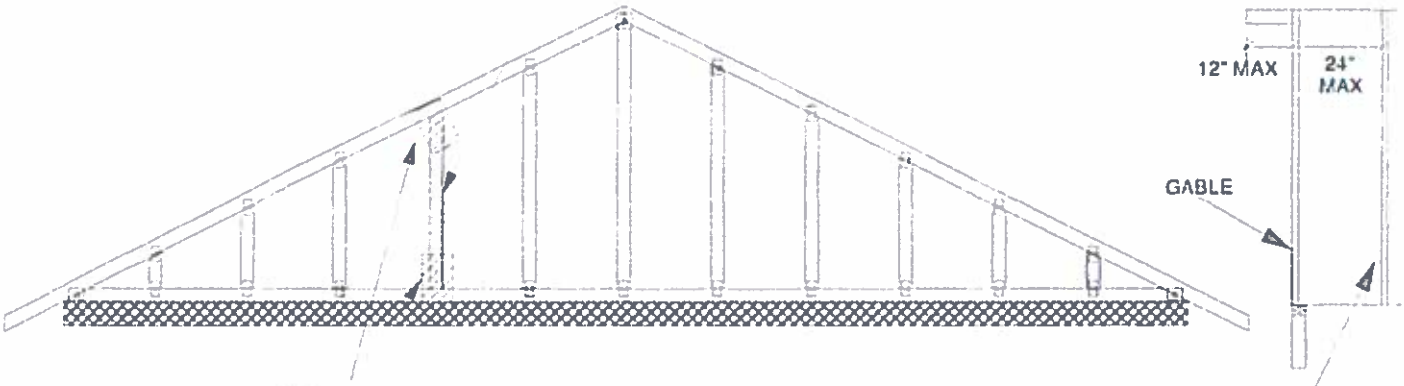

ATTACH 8" X 12" X 7/16" O.S.B. OR PLYWOOD (APA RATED SHEATHING 24/16 EXPOSURE 1) (MIN) TO THE INSIDE FACE OF TRUSS WITH FIVE 6d NAILS(.113" X 2.0") INTO EACH MEMBER (TOTAL 10 NAILS PER GUSSET)

THE OUTSIDE FACE OF THE GABLE MUST BE SHEATHED WITH (MIN) 7/16" O.S.B OR PLYWOOD. SEE MITEK STANDARD GABLE END DETAILS FOR WIND BRACING REQUIREMENTS

TRUSS CRITERIA

LOADING : 40-10-0-10 (MAX)
LOAD DURATION FACTOR : 1.15
SPACING : 24" O.C. (MAX)
TOP CHORD : 2X 4 OR 2X 6 (NO 2 MIN)
PITCH : 3/12 - 12/12
BEARING : CONTINUOUS
STUD SPACING :24" O.C. (MAX)

REFER TO INDIVIDUAL TRUSS DESIGN FOR PLATE SIZES AND LUMBER GRADES

FEBRUARY 12, 2004	REPAIR TO NOTCH 2X4 TOP CHORD OF GABLE TRUSS	ED-REP19A

Trenco, Edenton, North Carolina

ENGINEERED BY TRENCO
A MiTek Affiliate

1. THIS IS A SPECIFIC REPAIR DETAIL TO BE USED ONLY FOR ITS ORIGINAL INTENTION. THIS REPAIR DOES NOT IMPLY THAT THE REMAINING PORTION OF THE TRUSS IS UNDAMAGED. THE ENTIRE TRUSS SHALL BE INSPECTED TO VERIFY THAT NO FURTHER REPAIRS ARE REQUIRED. WHEN THE REQUIRED REPAIRS ARE PROPERLY APPLIED, THE TRUSS WILL BE CAPABLE OF SUPPORTING THE LOADS INDICATED.
2. ALL MEMBERS MUST BE RETURNED TO THEIR ORIGINAL POSITIONS BEFORE APPLYING REPAIR AND HELD IN PLACE DURING APPLICATION OF REPAIR.
3. THE END DISTANCE, EDGE DISTANCE, AND SPACING OF NAILS SHALL BE SUCH AS TO AVOID SPLITTING OF THE WOOD.
4. LUMBER MUST BE CUT CLEANLY AND ACCURATELY AND THE REMAINING WOOD MUST BE UNDAMAGED
5. THIS REPAIR IS TO BE USED FOR SINGLE PLY TRUSSES IN THE 2X_ ORIENTATION ONLY.
6. CONNECTOR PLATES MUST BE FULLY IMBEDDED AND UNDISTURBED.

LUMBER TO BE CUT CLEANLY AND ACCURATELY.
NO PLATES ARE TO BE DISTURBED.
APPLY 2X4 NO 2 SCAB TO ONE FACE OF TOP CHORD OF TRUSS WITH CONSTRUCTION QUALITY ADHESIVE AND 1 ROW OF 10d (3" X 0.131") NAILS SPACED 6" O.C.

MAXIMUM STUD SPACING = 24" O.C.

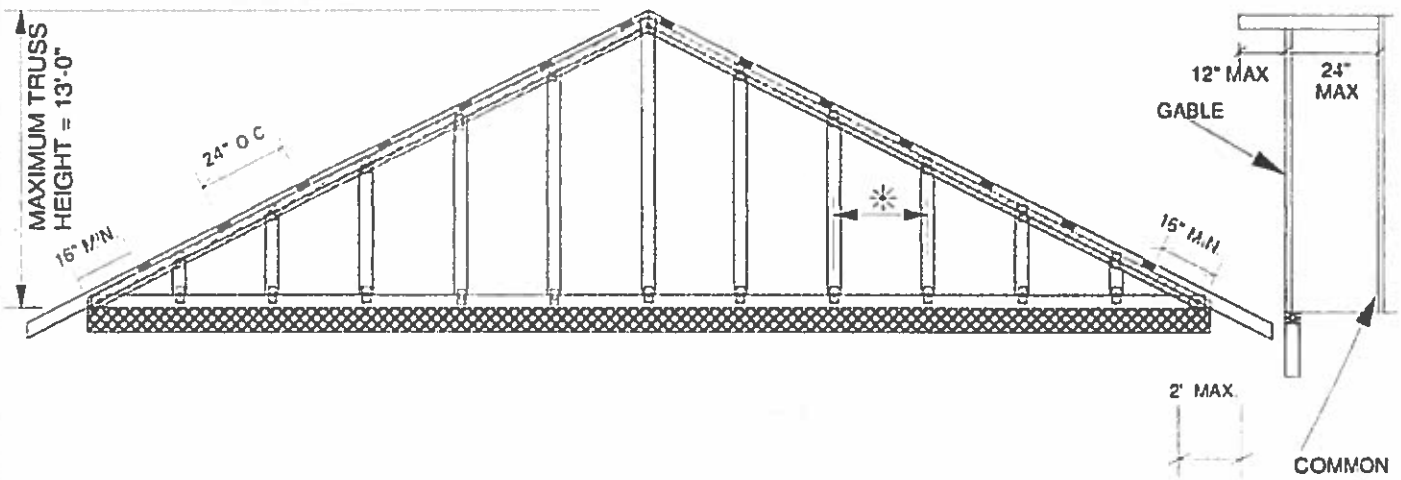

THE OUTSIDE FACE OF THE GABLE MUST BE SHEATHED W/ (MIN) 7/16" O.S.B OR PLYWOOD.
SEE MITEK STANDARD GABLE END DETAILS FOR WIND BRACING REQUIREMENTS.

IMPORTANT
This repair to be used only with trusses (spans less than 50') spaced 24" o.c. maximum, having pitches between 3/12 and 12/12, total top chord loads less than 50 psf and maximum wind speeds of 100 mph. Trusses not fitting these criteria should be examined individually.

TRUSS CRITERIA

LOADING : 40-10-0-10 (MAX)
DURATION FACTOR : 1.15
SPACING : 24" MAXIMUM
TOP CHORD : 2X 4 (NO 2 MIN)
PITCH : 3/12 - 12/12
BEARING : CONTINUOUS
STUD SPACING :24" O.C. (MAX)

REFER TO INDIVIDUAL TRUSS DESIGN FOR PLATE SIZES AND LUMBER GRADES

FEBRUARY 12, 2004	TOE-NAIL DETAIL	ED-CON04

Trenco, Edenton, North Carolina

ENGINEERED BY TRENCO

1) TOE-NAILS SHALL BE DRIVEN AT AN ANGLE OF 30 DEGREES WITH THE MEMBER AND STARTED 1/3 THE LENGTH OF THE NAIL FROM THE MEMBER END OR AS SHOWN.

2) THE PLACEMENT OF THE NAILS SHALL BE SUFFICIENT TO PREVENT SPLITTING OF THE WOOD.

SQUARE CUT

MAXIMUM ALLOWABLE REACTION BASED ON THREE 10d (3" X 0.131") NAILS. VALUES BASED ON BOTH MEMBERS OF IDENTICAL SPECIES
15% LOAD DURATION INCREASE

MAXIMUM REACTION:

SYP = 303 LBS.
DF = 258 LBS.
HF = 240 LBS.
SPF = 234 LBS.

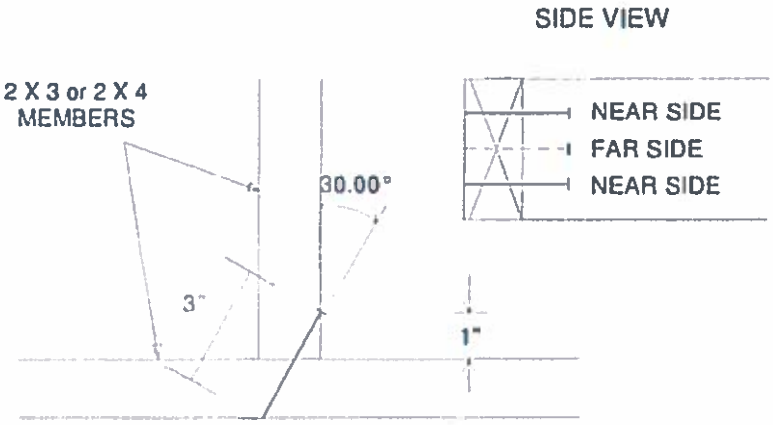

45 DEGREE ANGLE BEVEL CUT

MAXIMUM ALLOWABLE REACTION BASED ON THREE 10d (3" X 0.131") NAILS. VALUES BASED ON BOTH MEMBERS OF IDENTICAL SPECIES
15% LOAD DURATION INCREASE

MAXIMUM REACTION:

SYP = 303 LBS.
DF = 258 LBS.
HF = 240 LBS.
SPF = 234 LBS.

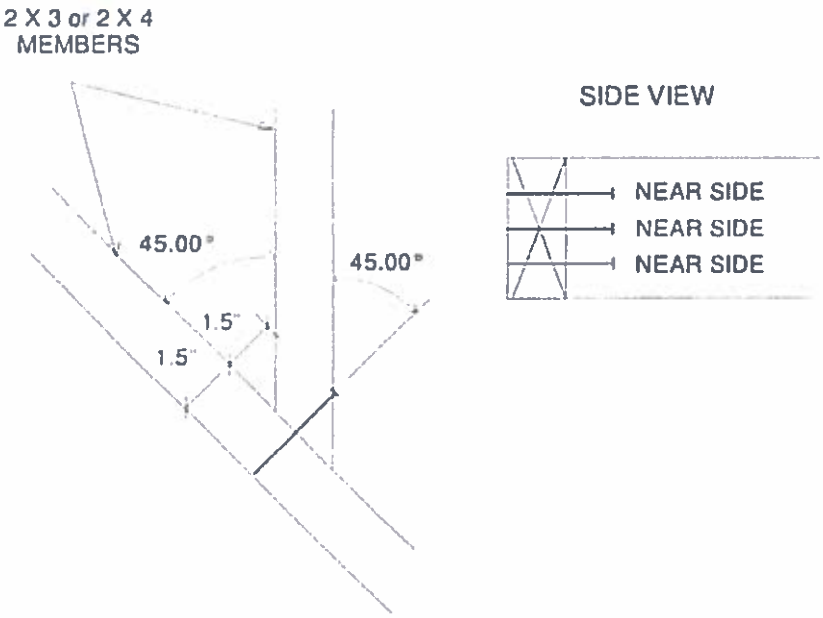

R

NOTES:

1. THIS IS A SPECIFIC REPAIR DETAIL TO BE USED ONLY FOR ITS ORIGINAL INTENTION. THIS REPAIR DOES NOT IMPLY THAT THE REMAINING PORTION OF THE TRUSS IS UNDAMAGED. THE ENTIRE TRUSS SHALL BE INSPECTED TO VERIFY THAT NO FURTHER REPAIRS ARE REQUIRED. WHEN THE REQUIRED REPAIRS ARE PROPERLY APPLIED, THE TRUSS WILL BE CAPABLE OF SUPPORTING THE LOADS INDICATED.
2. ALL MEMBERS MUST BE RETURNED TO THEIR ORIGINAL POSITIONS BEFORE APPLYING REPAIR AND HELD IN PLACE DURING APPLICATION OF THE REPAIR.
3. THE END DISTANCE, EDGE DISTANCE, AND SPACING OF NAILS SHALL BE SUCH AS TO AVOID UNUSUAL SPLITTING OF THE WOOD.
4. WHEN NAILING THE PLYWOOD GUSSETS AND/OR SCABS, THE USE OF A BACKUP WEIGHT IS RECOMMENDED TO AVOID LOOSENING OF THE CONNECTOR PLATES AT THE JOINTS OR SPLICES.

New 2x_ member (on edge) of No.2 grade or better added to the bottom chord. 2x_ members may be ripped an appropriate amount to accommodate the floor height required. On 2-ply trusses nail new members together prior to installation with two rows of 10D nails spaced 6" o.c.

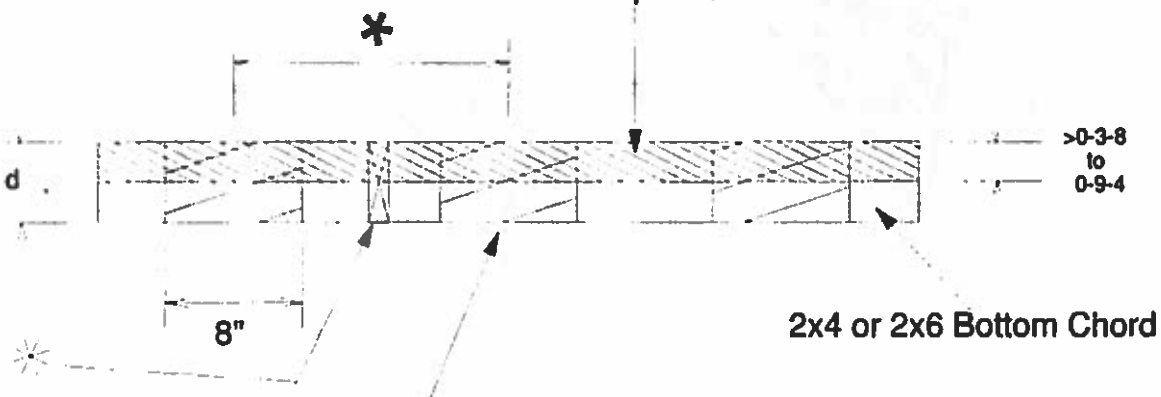

Solid blocking or X-Bracing spaced 48" on center required when padding up the bottom chord greater than 0-7-4 past it's original height.

Attach d x 8"x 1/2" plywood (or 7/16" O.S.B.) APA rated sheathing to each face of truss (shaded area) w/ construction quality adhesive and (3) - 6d common wire nails (.113"x2") into original bottom chord and (5) - 6d common wire nails in new member from each side as shown. (Total - 16 nails)

* Maximum gusset spacing to be the lesser of 36" o.c. or the maximum Bottom Chord purlin spacing as shown on the individual Engineering Truss Drawings.

IMPORTANT

Original truss must be designed for the loads that will be imposed by the intended use which requires padding up the bottom chord. This repair is to be used only with trusses spaced at 24" o.c. maximum. Trusses not fitting these criteria should be examined individually.

REFER TO INDIVIDUAL TRUSS DESIGN FOR PLATE SIZES AND LUMBER GRADES

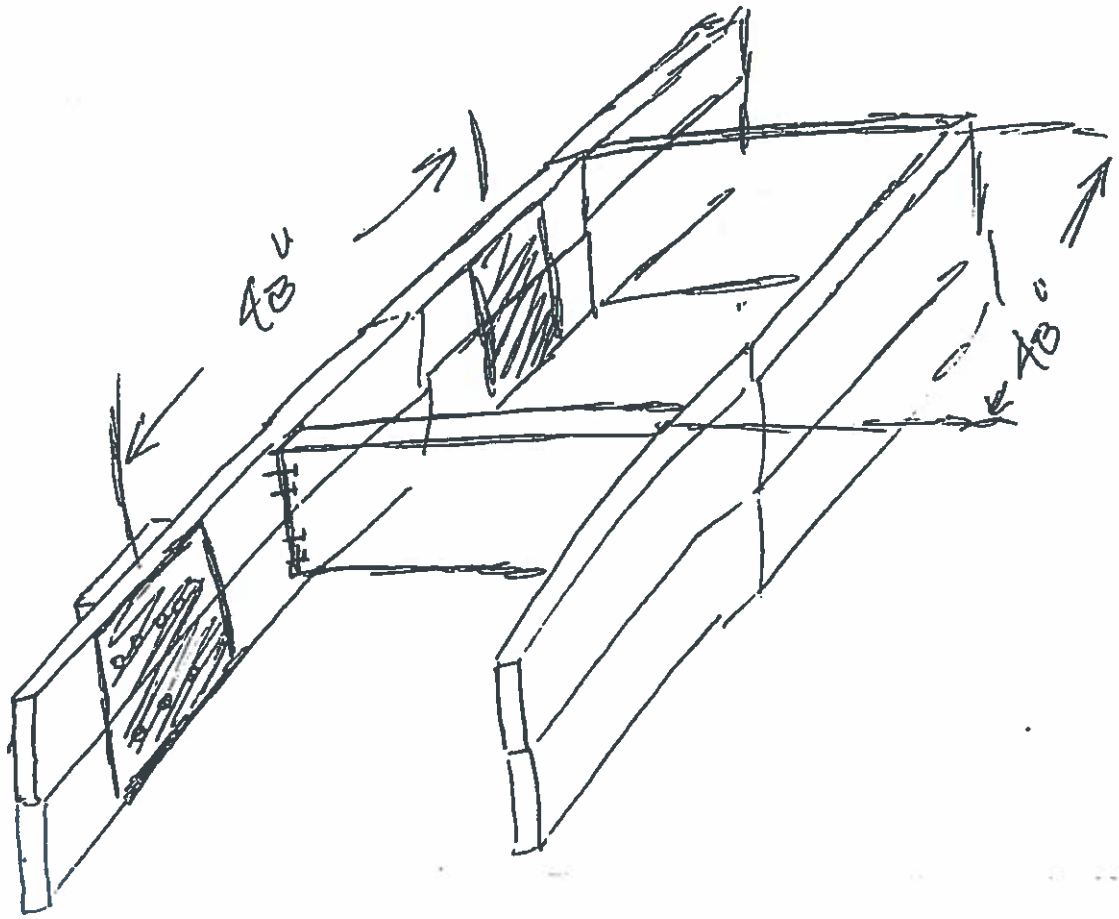
48"
48"

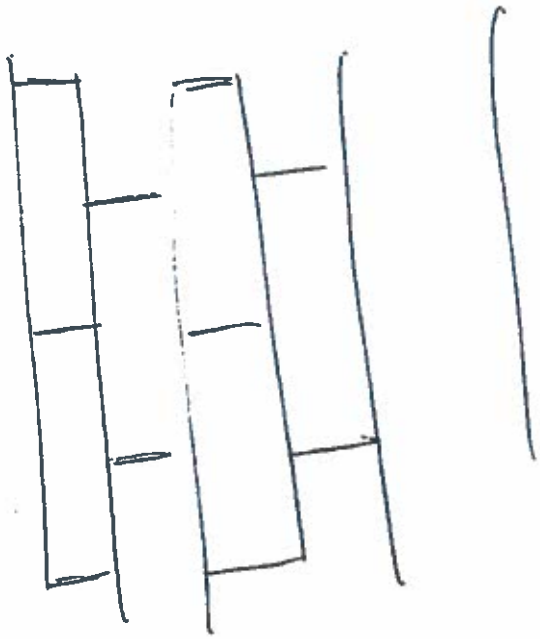

In short, when designing trusses, always check to ensure the analog bearing conditions used for member design reflect the actual conditions in the field. If there is doubt as to whether the bearing is close enough to a joint to be modeled at the joint the designer should contact his or her engineer at MiTek to confirm the design model.

13. **Top chord bearing floor trusses.**
When using top chord bearing floor trusses, it will usually be required to have a double top chord above the bearing. Be sure the stacked top chord extends far enough into the truss so it can be attached with at least 2 plates. If it does not plate the stacked member with at least two plates, extend it in VersaTruss until a second plate is added or simply run it back to the next vertical web.

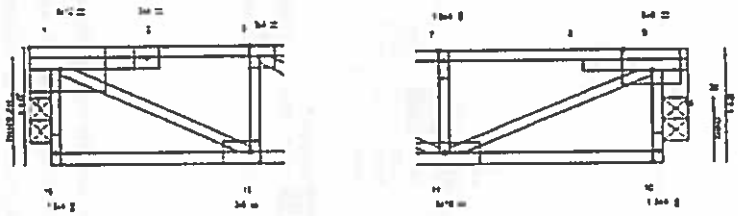

Correct Incorrect

14. **No room load on attic trusses.**
When you create an attic truss be sure to define the truss as an attic under Truss Application in Truss Basics. This will ensure your attic has the required additional load added to the attic room area. If an attic truss is created using VersaTruss, you will need to manually add the additional loads to the floor and ceiling area.

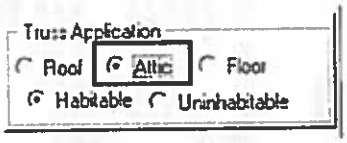

Also, if you remove a section of bottom chord in a room or you have sloping walls in an attic, the program will not add any load to the room even if it is defined as an attic in Truss Basics. Load will need to be added manually to the floor, ceiling, and walls on these truss types.

Residential attic rooms with over 7' height may be used as habitable and must be checked with minimum 30 psf live load in the room.

15. **Splicing in heel panels and two splices in the same panel.**
While the program checks all of the following properly, it is still recommended to keep top and bottom chord splices out of the first panel of a truss. Try to move the splices beyond the first web so the chord member will be attached by at least two plates before the splice occurs. It is also recommended to keep from having multiple splices in the same truss panel and to avoid placing multiple splices in an Attic room. Finally, avoid a splice in the top chord of an attic truss in the slopped ceiling area of the room. These rules are not required when the truss is designed with semi-rigid joints or the Advanced Stiffness Method.

How to read the... MiTek 20/20 Engineering Drawing

Roof Truss

- **A** Cumulative Dimensions
- **B** Panel Length (feet-inches-sixteenths)
- **C** Slope
- **D** Plate Size and Orientations
- **E** Overall Truss Height
- **F** Bearing Location
- **G** Truss Span (feet-inches-sixteenths)
- **H** Plate Offsets
- **I** Design Loading (PSF)
- **J** Spacing O.C. (feet-inches-sixteenths)
- **K** Duration of Load for Plate and Lumber Design
- **L** Code
- **M** Top Chord, Bottom Chord and Web maximum combined stress indicies
- **N** Deflections (inches) and Span to Deflection ratio
- **O** Input Span to Deflection Ratio
- **P** MiTek Plate Allowables (PSI)
- **Q** Lumber Requirements
- **R** Reaction (pounds)
- **S** Maximum Bearing Required (inches)
- **T** Maximum Uplift and/or Horizontal Reaction if Applicable
- **U** Required Member Bracing
- **V** Member Axial Forces for Load Case 1
- **W** Notes
- **X** Additional Loads/Load Cases
- **Y** Truss Weight

MiTek Industries, Inc.
14515 North Outer forty Drive
Suite 300
Chesterfield, MO 63017-5746
(314)434-1200 Phone
www.mii.com

Job	Truss	Truss Type	Qty	Ply	MiTek Web Site
WEB SITE	ROOF1	ROOF TRUSS	13	1	MiTek Engineering Drawing Explained Job Reference (optional)

MiTek Industries, Inc., Chesterfield, MO 63017, Chip Dean 6.000 s Feb 18 2004 MiTek Industries, Inc. Wed Feb 18 15:06:38 2004 Page 1

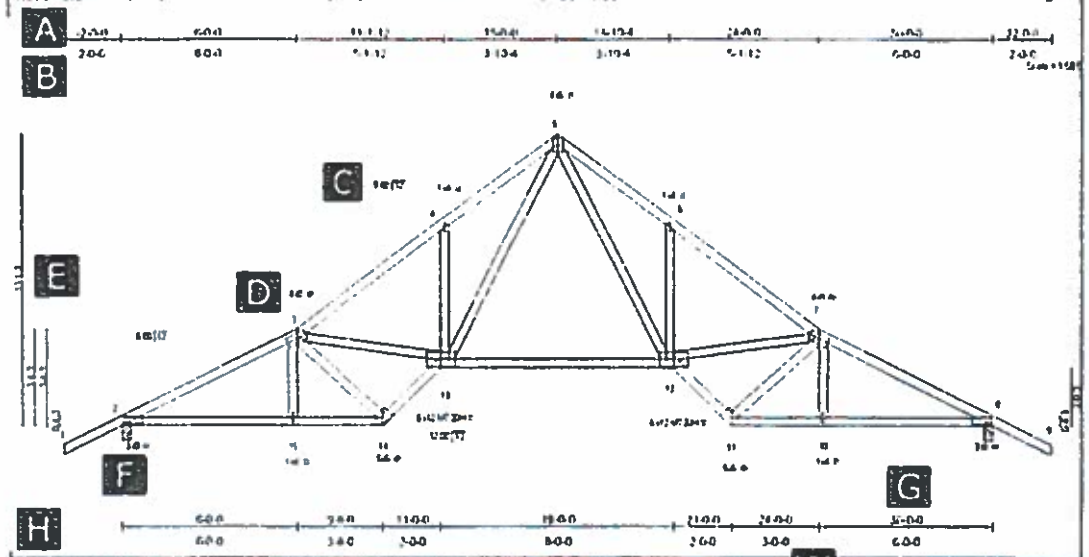

Plate Offsets (X,Y) [2:0-8-8,0-0-10] [8:0-8-8,0-0-10] [11:0-2-8,Edge] [14:0-2-8,Edge]

LOADING (psf)		SPACING	2-0-0	CSI		DEFL	in	(loc)	l/def	L/d	PLATES	GRIP
TCLL	30.0	Plates Increase	1.15	TC	0.38	Vert(LL)	-0.21	12-13	>999	240	MT20	244/190
TCDL	10.0	Lumber Increase	1.15	BC	0.57	Vert(TL)	-0.52	12-13	>688	180	MT20H	187/143
BCLL	0.0	Rep Stress Incr	YES	WB	0.55	Horz(TL)	0.21	8	n/a	n/a		
BCDL	10.0	Code IBC2000/TPI2002		(Matrix)							Weight: 182 lb	

LUMBER
TOP CHORD 2 X 4 SYP No.2
BOT CHORD 2 X 4 SYP No.2
WEBS 2 X 4 SYP No.3

BRACING
TOP CHORD Structural wood sheathing directly applied or 3-6-14 oc purlins
BOT CHORD Rigid ceiling directly applied or 10-0-0 oc bracing

REACTIONS (lb/size) 2=1657/0-3-8, 8=1657/0-3-8
Max Horz 2=183(load case 4)
Max Uplift 2=-101(load case 5), 8=-101(load case 6)

FORCES (lb) - Maximum Compression/Maximum Tension
TOP CHORD 1-2=0/70, 2-3=-2712/26, 3-4=-2759/53, 4-5=-2715/184, 5-6=-2715/104, 6-7=-2759/29, 7-8=-2712/27, 8-9=0/70
BOT CHORD 2-15=-78/2314, 14-15=-82/2311, 13-14=-56/1703, 12-13=0/1401, 11-12=0/1703, 10-11=0/2311, 8-10=0/2314
WEBS 3-15=0/197, 3-14=-1521/45, 3-13=0/884, 4-13=-354/172, 5-13=-156/1578, 5-12=-103/1578, 6-12=-354/172, 7-12=0/884, 7-11=-1521/0, 7-10=0/197

NOTES
1) Unbalanced roof live loads have been considered for this design.
2) Wind: ASCE 7-98, 90mph; h=25ft; TCDL=6.0psf; BCDL=6.0psf; Category II; Exp B; enclosed; MWFRS gable end zone; cantilever left and right exposed ; end vertical left and right exposed; Lumber DOL=1.33 plate grip DOL=1.33
3) This truss has been designed for a 10.0 psf bottom chord live load nonconcurrent with any other live loads.
4) All plates are MT20 plates unless otherwise indicated.
5) This truss requires plate inspection per the Tooth Count Method when this truss is chosen for quality assurance inspection.
6) One RT7 USP connectors recommended to connect truss to bearing walls due to uplift at jt(s) 2 and 8.

LOAD CASE(S) Standard

ALL 50 STATES REGISTERED PROFESSIONAL ENGINEER MiTek

SAMPLE:
NOT FOR PRODUCTION

ADDED 2 X 6
TRUSS
BOTTOM
CHORD

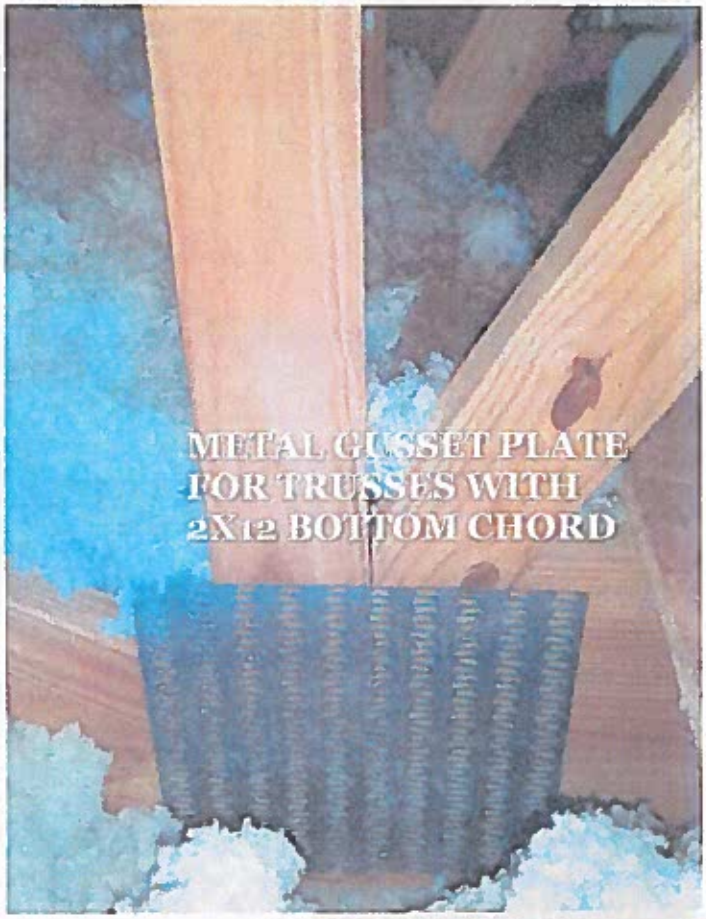
METAL GUSSET PLATE
FOR TRUSSES WITH
2X12 BOTTOM CHORD

ATTIC FLOOR
TRUSS BOTTOM CHORD

ADDED 2 X 6
TRUSS
BOTTOM
CHORD

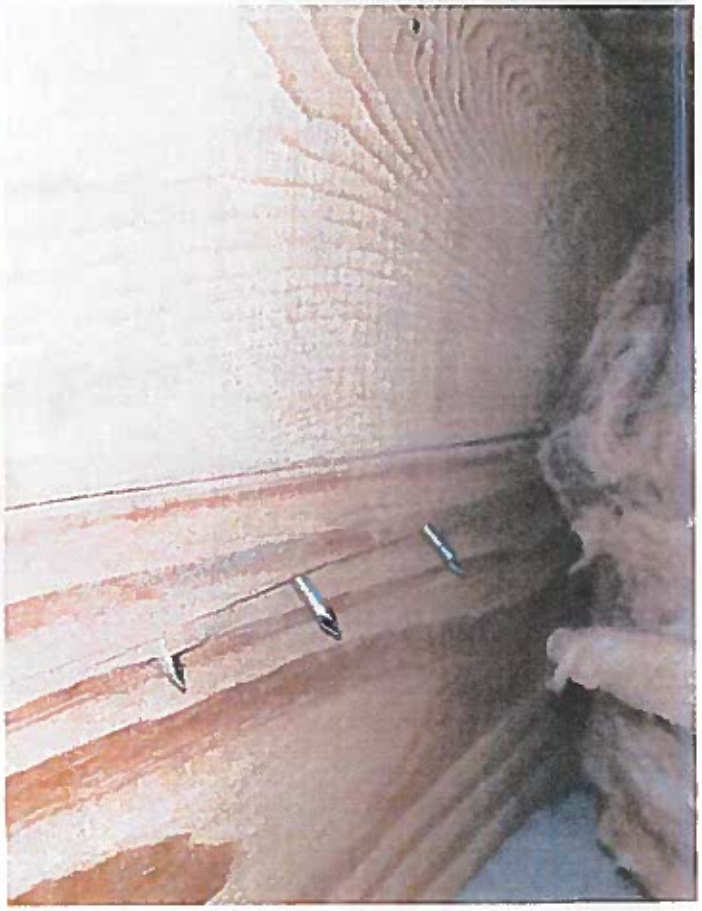

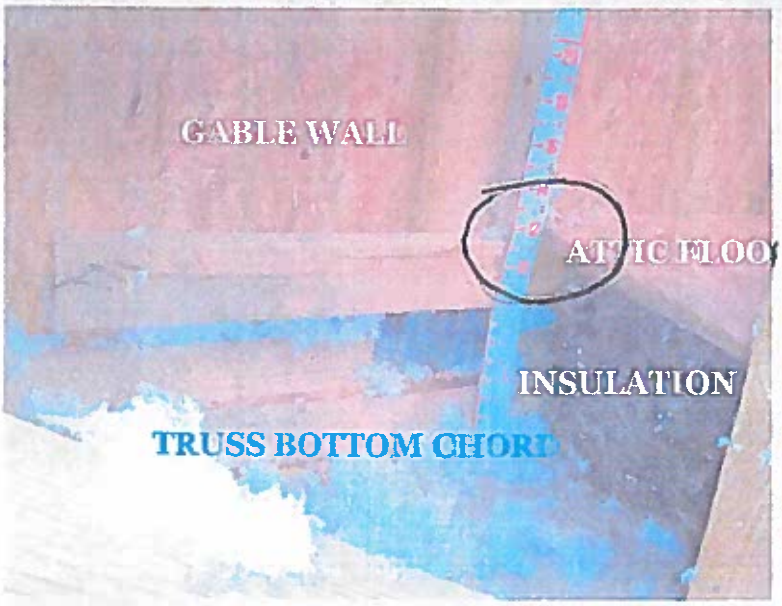
GABLE WALL
ATTIC FLOOR
INSULATION
TRUSS BOTTOM CHORD

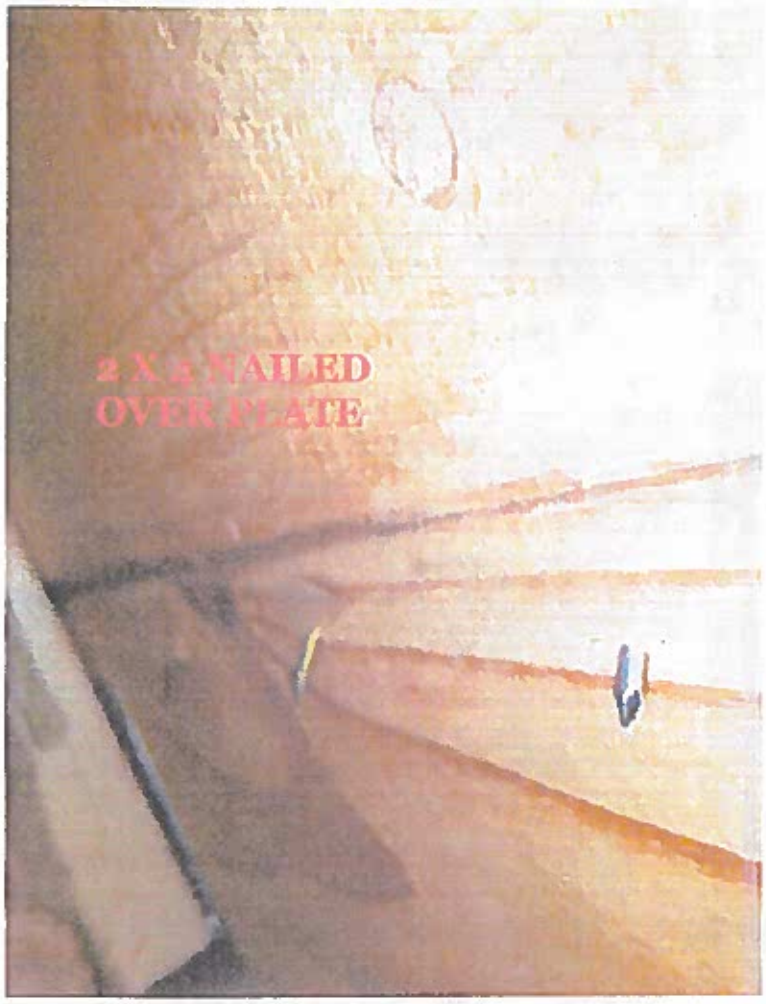
2 X 4 NAILED
OVER PLATE

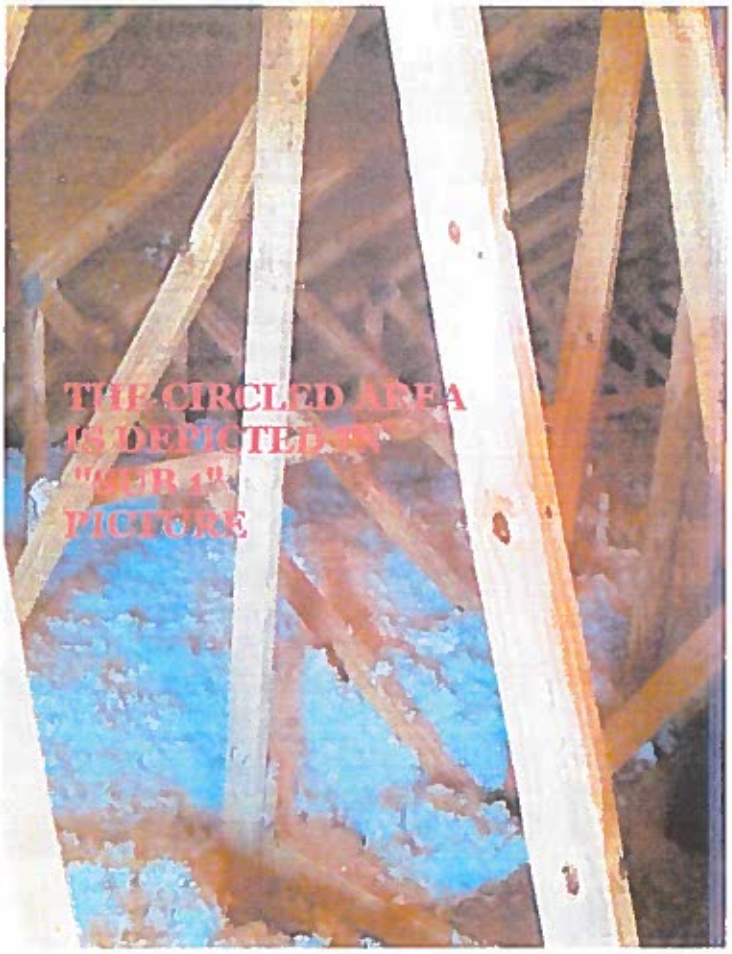
THE CIRCLED AREA
IS DEPICTED IN
"SUB 1"
PICTURE

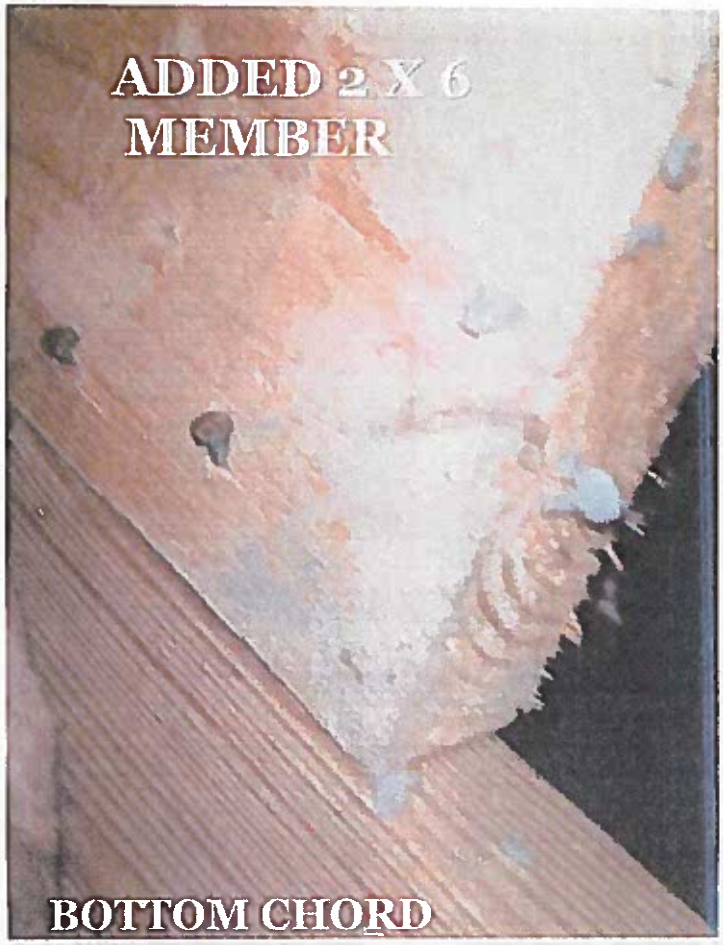
ADDED 2 X 6
MEMBER
BOTTOM CHORD

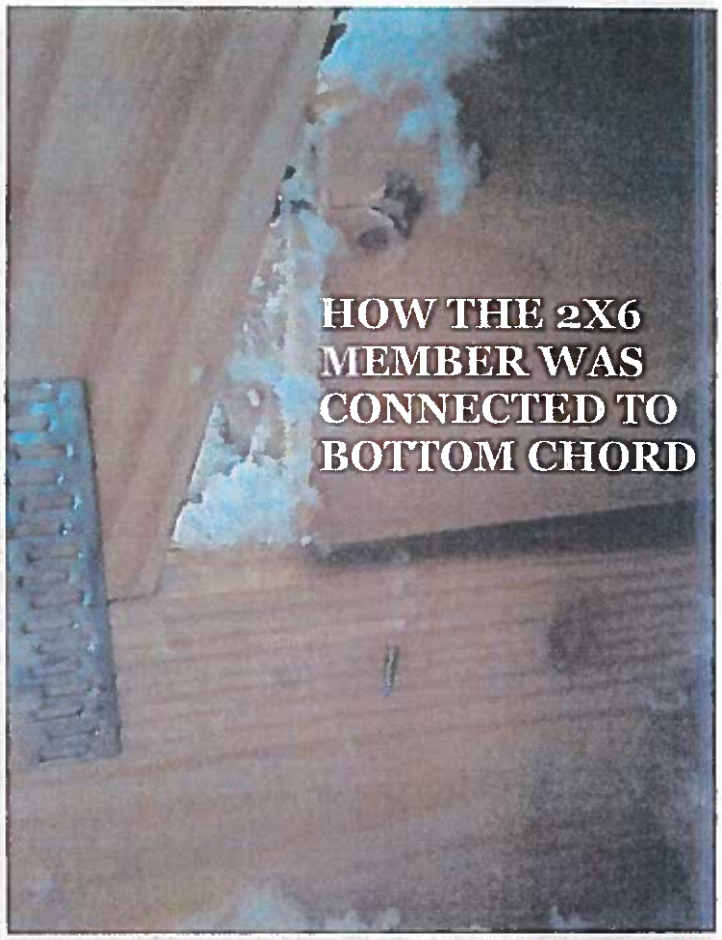
HOW THE 2X6
MEMBER WAS
CONNECTED TO
BOTTOM CHORD

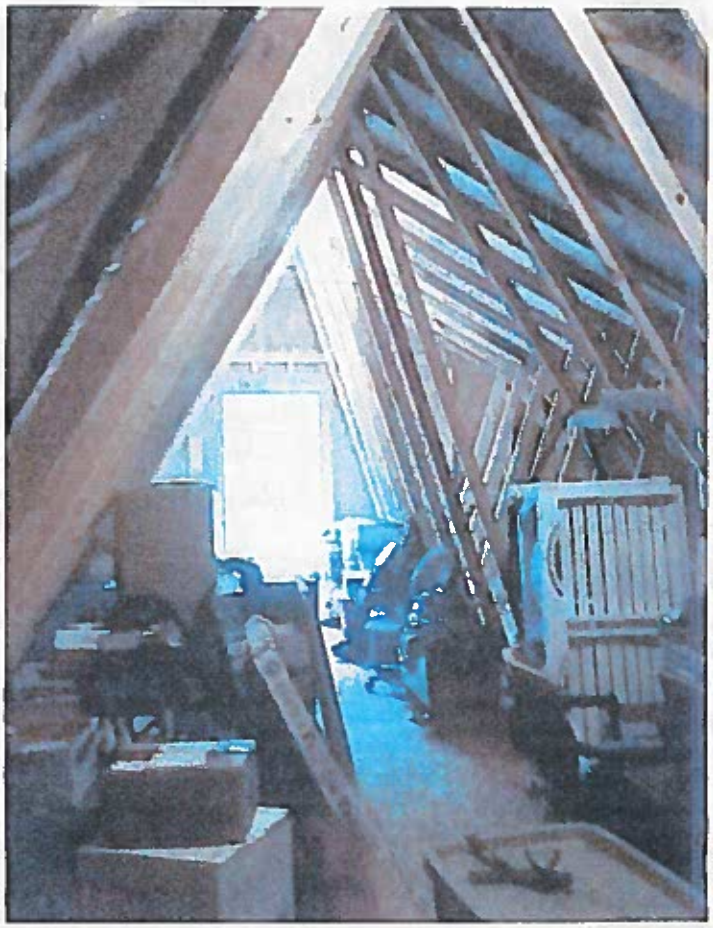

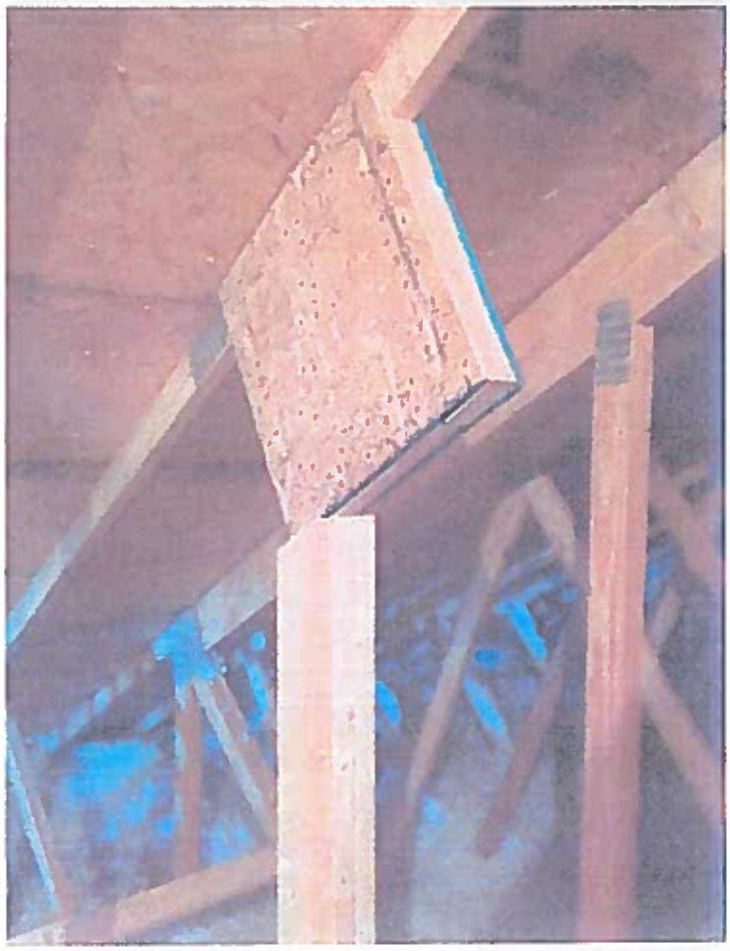

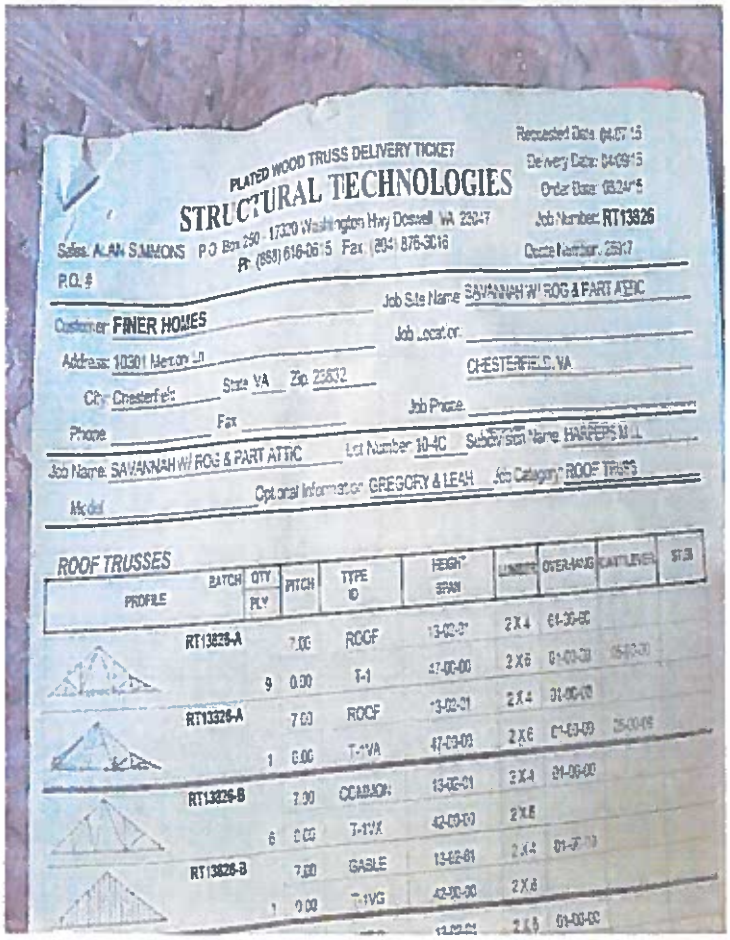

PLATED WOOD TRUSS DELIVERY TICKET

STRUCTURAL TECHNOLOGIES

Requested Date: 04/07/15
Delivery Date: 04/09/15
Order Date: 03/24/15
Job Number: RT13826
Quote Number: 25917

Sales: ALAN SIMMONS P.O. Box 290 - 17320 Washington Hwy Doswell, VA 23047
Ph: (888) 616-0615 Fax: (804) 876-3016

P.O. #

Customer: FINER HOMES
Address: 10301 Merton Ln
City: Chesterfield State: VA Zip: 23832
Phone: Fax:

Job Site Name: SAVANNAH W/ ROG & PART ATTIC
Job Location: CHESTERFIELD, VA
Job Phone:

Job Name: SAVANNAH W/ ROG & PART ATTIC Lot Number: 10-4C Subdivision Name: HARPERS MILL
Model: Optional Information: GREGORY & LEAH Job Category: ROOF TRUSS

ROOF TRUSSES

PROFILE	BATCH	QTY PLY	PITCH	TYPE ID	HEIGHT SPAN	LUMBER	OVERHANG	CANTILEVER	STIR
	RT13826-A		7.00	ROOF	13-02-01	2 X 4	01-00-00		
		9	0.00	T-1	47-00-00	2 X 6	01-00-00	05-00-00	
	RT13826-A		7.00	ROOF	13-02-01	2 X 4	01-00-00		
		1	0.00	T-1VA	47-00-00	2 X 6	01-00-00	05-00-00	
	RT13826-B		7.00	COMMON	13-02-01	2 X 4	01-00-00		
		6	0.00	T-1VX	42-00-00	2 X 6			
	RT13826-B		7.00	GABLE	13-02-01	2 X 4	01-00-00		
		1	0.00	T-1VG	42-00-00	2 X 6			
					13-02-01	2 X 6	01-00-00		

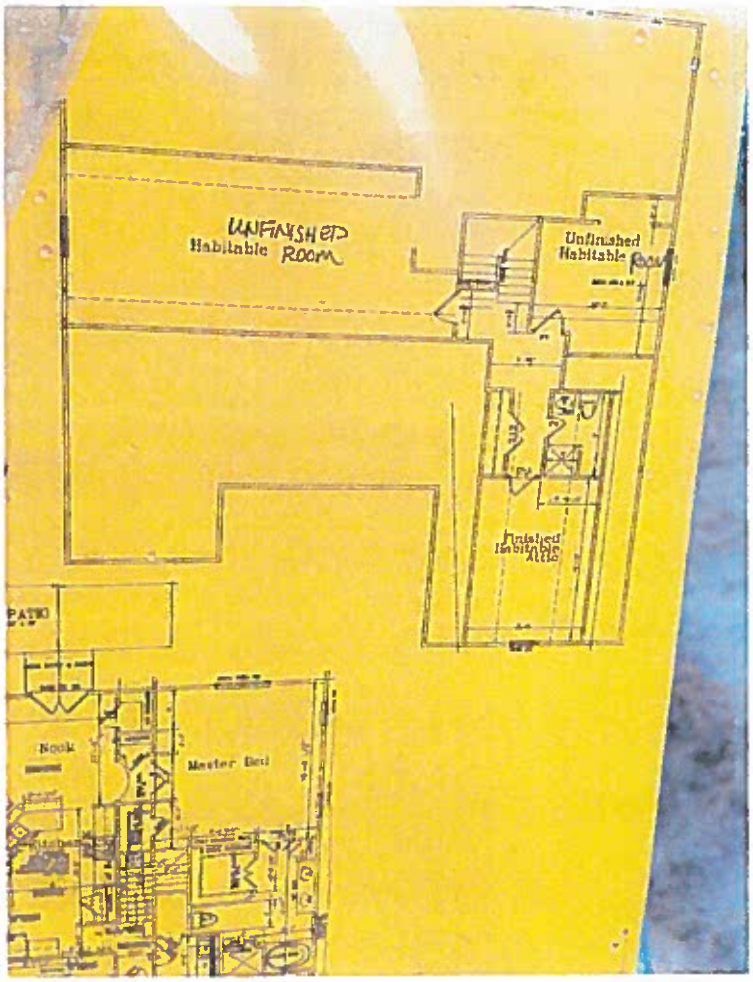
UNFINISHED
Habitable ROOM
Unfinished
Habitable Room
Unfinished
Habitable
Attic
PATIO
Nook
Master Bed

Gmail

Leah Thorpe <leahbthorpe@gmail.com>

Finer Homes Code Violations-Thorpe Residence

Leah Thorpe <leahbthorpe@gmail.com> Sun, Nov 27, 2016 at 7:22 PM
To: DuplerB@chesterfield.gov, wittr@chesterfield.gov, clementsro@chesterfield.gov
Cc: CaseyJoe@chesterfield.gov
Bcc: Greg Thorpe <ghthorpe@yahoo.com>, Leah Thorpe <leahbthorpe@gmail.com>

Mr. Dupler, Mr. Witt, and Mr. Clements:

Thank you for taking the time to meet with us on Monday 11/14/16. We appreciate your efforts in facilitating the meeting with Finer Homes. Mr. Holt has shown no interest in meeting with us since we closed on the house on June 30, 2015 and his cooperative attitude on Monday night was in stark contrast to the many email's we have exchanged in the past 17 months in which he has refused to address building code defects properly.

We have not received any Information in two weeks regarding the repair drawing for the padded up trusses from Frank Lassiter. Has anyone contacted him for his repair drawing? Has James Fletcher been located?

What is the status of the foundation and joist repair that was discussed on 11/21/16? When can we expect the repair drawings for these items to be completed and repairs to begin?

In our meeting we agreed that one section of the driveway would be torn out and re-poured so that the water drained away from the house. It was understood that if this did not fix the problem then more sections would have to be torn out and re-poured. This was going to be done "on the next decent day". We have had no rain since 11/15/16, and temperatures have only been below freezing on three nights since our meeting.

I am sure that you all know that the clock is ticking and it will not be long until our option to take further action to ensure that Finer Homes will fix the building code violations on our home will expire. We do not intend to wait in hopeful anticipation for Finer Homes to do the right thing only to find ourselves with no options left. It only took them 91 days to build our home. They have had ample time to fix the code violations which they were notified of in an August 3, 2016 Letter of Defect, a September 16, 2016 Letter of Violation, and a September 16, 2016 Letter of Defect.

We have our appeal meeting tomorrow night to appeal the building officials decision on the driveway drainage, the floor joist, the truss alteration to build up the bottom chord depth, and the extended compliance times. It would be helpful to have an update and also have the items we agreed to on November 14th in writing.

We are requesting that The Department of Building Inspections, as required by law, issue a Letter of Violation for the violations that Finer Homes was notified of in your Letter of Defect dated September 16, 2016. We also request that a summons be issued for the code

violations that Finer Homes was notified of in a Letter of Defect dated August 3, 2016, and a Letter of Violation dated September 16, 2016. The sixty day compliance time has expired for both of these notifications.

Again, we appreciate that you are spending a lot of time on this matter and the meeting on Monday night seemed to be mostly positive. However, taking into account what Finer Homes has actually done and not done in the past 17 months we don't feel that it would be in our best interest to just sit and continue to wait for them to actually do the things that Mr. Holt said he would do in our meeting on Monday.

Sincerely,

Greg and Leah Thorpe

Gmail

Leah Thorpe <leahbthorpe@gmail.com>

Finer Homes Code Violations-Thorpe Residence

Clements, Ron <ClementsRo@chesterfield.gov> Tue, Nov 29, 2016 at 3:10 PM
To: Leah Thorpe <leahbthorpe@gmail.com>, "Dupler, Bill" <DuplerB@chesterfield.gov>, "Witt, Rick" <WittR@chesterfield.gov>
Cc: "Casey, Joe" <CaseyJoe@chesterfield.gov>, "Greg Holt (gholt@finerhomesinc.net)" <gholt@finerhomesinc.net>, "Davis, Chris" <DavisCh@chesterfield.gov>

Mrs. Thorpe:

Attached are my notes from our meeting on 11-14-16 and where things stand from our perspective. We spoke with Mr. Holt today and he was under the impression that he needed to wait until the appeal case was completed to apply for the permit or begin the work. We informed him that that was not the case and to apply for the permit today or tomorrow and reach out to you to schedule times to perform the work. Mr. Holt also stated that the designs from Mr. Toney were complete and they will be submitted with the permit application.

Cordially,

Ron

Ron Clements | Assistant Director

Chesterfield Building Inspection Department

Safe construction from the ground up

(804) 751-4163 | www.chesterfield.gov/bi/

9600 Government Center Parkway Chesterfield, VA 23832-0040

From: Leah Thorpe [mailto:leahbthorpe@gmail.com]
Sent: Sunday, November 27, 2016 7:22 PM
To: Dupler, Bill; Witt, Rick; Clements, Ron
Cc: Casey, Joe
Subject: Finer Homes Code Violations-Thorpe Residence

[Quoted text hidden]

Thorpe action items.docx
16K

Thorpe action items (11-14-16):

All repairs: Per the 11-29-16 phone call to Holt, Mr. Holt stated that after being informed of the appeal he assumed he need to wait until after the appeal hearing to apply for the permit and schedule the repairs with the Thorpes. We stated that it was not necessary to wait and to contact the Thorpes to arrange the times to perform the repairs, and come into the office within the next day to secure the permit.

Permit: A new administrative permit, with fee waived per Rick, will be entered to cover all corrective construction to address the outstanding defects.

> *11-29-16 phone call to Holt*-Mr. Holt stated that he would be in the afternoon of 11-29 or the morning of 11-30 to submit the engineering details from Mr. Toney and Trenco, the permit application for the repair work and obtain the permit.

Field visit/HVAC hole in the foundation wall: Ron, Chris and Ed will meet with Mr. Holt and Mr. Toney at the Thorpe residence to determine the best fix for the foundation wall HVAC opening and joist sistering.

Work will begin ASAP after field visit.

> *11-21-16 site meeting:* Chris Davis and Ron Clements met with Mr. Thorpe, Mr. Toney P.E. and Mr. Holt of Finer Homes at the Thorpe residence. We discussed a number of ways that the joist notch and the foundation wall bearing could be addressed. Mr. Toney will finalize designs for both fixes to be submitted with the repair permit application.
>
> *11-29-16 phone call to Holt*- Mr. Holt stated that Mr. Toney had completed the design and it would be submitted with the permit application.

Truss "padding" detail- Mr. Holt stated that he had a phone conversation with Mr. Lassiter P.E. and that he approved of the Fletcher P.E. detail but could not officially seal a design that differed from the MiteK standard detail because he worked for MiTek. Mr. Holt will follow-up with Mr. Lassiter to see if he could obtain something in writing from Mr. Lassiter confirming his statement of approval during their conversation. The Thorpes would not commit to accepting such documentation until they read it. BI stands by their position that the current truss padding is a defect.

> *11-29-16 phone call to Holt*- Holt stated that he would forward an email to the Thorpes from Structec regarding Mr. Fletcher sealing the truss detail.

Bathtub cut out- Plywood will be cut to fit the bathtub cut out and the gaps will be sealed.

Bathtub floor drain joist notch- Additional floor joist will be installed on either side of the notched floor joist. The only questionable issue with this is if the pipe that was the cause of the notch would impede installation of the new joist on that side of the notched joist. By sistering the joists in this manner an engineered design is not required.

> *11-29-16 phone call to Holt*- Mr. Holt stated that Mr. Toney had completed the design and it would be submitted with the permit application.

Driveway drainage- It was agreed that one panel of concrete that is roughly the left front quarter of the panel in front of the garage door (facing up the driveway towards the house) would be removed and new concrete placed that will have as much fall as possible. The contractor will do their best to match the color and agreed that if the Thorpe's were not happy with it they would re do it as necessary. BI agreed that we will not hold them to a 2% fall. BI will accept any fall that moves the water away from the garage and is acceptable to the Thorpes.

Truss alteration at window- The Toney design is acceptable. A copy of Toney's design must be submitted with the repair permit.

> *11-29-16 phone call to Holt*- Mr. Holt stated that Mr. Toney's design would be submitted with the permit application.

HVAC platform- The Trenco design is acceptable. A copy of sealed design must be submitted with the repair permit.

> *11-29-16 phone call to Holt*- Mr. Holt stated that the Trenco design would be submitted with the permit application.

Gas line- The foundation wall opening for he gas line must be sealed.

HVAC refrigerant line- The HVAC refrigerant line must have the insulation fixed.

Permit Details

PERMIT DETAIL JOB #20161129-049

Issue Date: 11/29/2016 11:25:34 AM
Location: 16300 LONGLANDS RD
Tax Map Number: 7126646072000000
Subdivision: HARPERS MILL
Lot Number: 010
Construction Description: Combustible Unprotected
Use Group Description: One and two family dwelling
Permit Fee: $0.00
Estimated Cost of Construction: $0.00

Issue date 11-29-16 11:25 am

Owner Name:
THORPE GREGORY H & LEAH B
16300 LONGLANDS RD
CHESTERFIELD, VA 23832

Applicant Name:
Finer Homes Inc
PO Box 1090
Chesterfield, VA 23832
(804)748-7771

Permit Review Results **Inspection Results**

New Permit Data Search

Description: Gas Piping - Piping for new single family dwelling, natural gas. Low gas pressure
Applicant Name: D & F Plumbing Inc

Permit Number: 20161116-004
Job Location: 5511 QUAIL RIDGE TER
Subdivision: NEWBYS WOOD
Lot Number: 003
Description: 22x21 Metal detached A-frame carport. 2012 IRC
Applicant Name: Deborah O Willis

Permit Number: 20161129-072
Job Location: 4000 KINGS GATE RD
Subdivision: HAMLINS REACH
Lot Number: 013
Description: Mechanical - Install two 2 ton 14 seer heat pumps with air handler, 10kw heater, line set, duct, grilles and t-stat.
Applicant Name: Design Air LLC

Permit Number: 20161129-081
Job Location: 5804 KEDLESTON AVE
Subdivision: MEADOW RIDGE
Lot Number: 037
Description: Electrical - Changing out existing 200 AMP panel, like for like. Re-wire entire home with new wires to bring up to code.
Applicant Name: Enrique Garrido

Permit Number: 20161129-083
Job Location: 5804 KEDLESTON AVE
Subdivision: MEADOW RIDGE
Lot Number: 037
Description: Plumbing - Change all existing plumbing pipe and outside main plumbing 4" pipe.
Applicant Name: Enrique Garrido

Permit Number: 20161129-049
Job Location: 16300 LONGLANDS RD
Subdivision: HARPERS MILL
Lot Number: 010
Description: Permit to repair defects, cited in the August 2016 Letter of Defect, September 2016 Letter of Defect, and September 2016 Notice of Violation. Concern # 20160607-032. Repair per 2012 USBC. Itemized list of repairs are in the notes section on the back page.
Applicant Name: Finer Homes Inc

Permit Number: 20161116-048
Job Location: 15525 WILLOWMORE DR
Subdivision: NEWMARKET
Lot Number: 016
Description: Construct new single family dwelling with an attached garage. 2012 IRC
Applicant Name: Greguire Development Inc

Permit Number: 20161116-001
Job Location: 1906 JAMES OVERLOOK DR
Subdivision: MEADOWVILLE LANDING-RIVERSBEND
Lot Number: 039
Description: Construct new single family dwelling with an attached garage. E-Plans. 2012 IRC
Applicant Name: HHHunt Homes LC

Permit Number: 20161115-086
Job Location: 8209 REEDY BRANCH RD
Subdivision:
Lot Number:
Description: Build a 18x20 shed. 2012 IRC
Applicant Name: Horace S Moore

Permit Number: 20161129-013
Job Location: 4267 WELLS RIDGE CT
Subdivision: SOUTH CHESTER FOREST
Lot Number: 024
Description: Plumbing - New single family dwelling
Applicant Name: Imperial Plumbing Inc

Permit Number: 20161129-014
Job Location: 4267 WELLS RIDGE CT
Subdivision: SOUTH CHESTER FOREST
Lot Number: 024
Description: Gas Piping - Propane gas permit for appliance only. Low gas pressure.
Applicant Name: Imperial Plumbing Inc

Permit Number: 20161116-051
Job Location: 7717 WHITTINGTON DR
Subdivision: CRESTWOOD FARMS
Lot Number: 025
Description: Waterproof basement and install super sump. 2012 IRC.
Applicant Name: JES Construction Inc

Permit Number: 20161129-070
Job Location: 15502 FOX GATE CT
Subdivision: FOXCROFT
Lot Number: 014
Description: Mechanical - Replace gas furnace, indoor coil and air condition outdoor unit serving first floor. Reconnect to existing gas, electrical and air distribution system.
Applicant Name: Kelleher Corporation

Gmail

Leah Thorpe <leahbthorpe@gmail.com>

Appeals Hearing for 16300 Longlands Road, Chesterfield, VA 23832 - New date 11/30/16

Kindervater, Pat <KindervaterP@chesterfield.gov> Mon, Nov 28, 2016 at 10:22 AM
To: "leahbthorpe@gmail.com" <leahbthorpe@gmail.com>, "leah_thorpe@ccpsnet.net" <leah_thorpe@ccpsnet.net>, "ghthorpe@yahoo.com" <ghthorpe@yahoo.com>, Brown Pearson <cbpearson3@erg-homes.com>, Chris Eudailey <dewdrinkers@verizon.net>, Jack Wilson <jack@jackwilsonplc.com>, James Ingle <jingle@lifestylebuilders.com>, James Kester <jkester@colonialplumbing.com>, Michael Bricker <mbricker@balzer.cc>, Steve Conner <connerelec@aol.com>
Cc: "gholt@finerhomesinc.net" <gholt@finerhomesinc.net>, "Clements, Ron" <ClementsRo@chesterfield.gov>, "Witt, Rick" <WittR@chesterfield.gov>

Please confirm with me ASAP that this date is acceptable to all of you. The new date is 11/30/16 at 6 p.m.

Respond to this email.

Pat Kindervater

Administrative Supervisor/Secretary to the Board of Appeals

Chesterfield County Building Inspection

Ph: (804) 768-7761 Fax: (804) 751-2249

E-mail: kindervaterp@chesterfield.gov

Website: http://www.chesterfield.gov/bi/

Safe construction from the ground up

Gmail

Leah Thorpe <leahbthorpe@gmail.com>

Appeals Hearing for 16300 Longlands Road, Chesterfield, VA 23832 - New date 11/30/16

James Kester <jkester@colonialplumbing.com> Mon, Nov 28, 2016 at 11:07 AM
To: "Kindervater, Pat" <KindervaterP@chesterfield.gov>, "leahbthorpe@gmail.com" <leahbthorpe@gmail.com>, "leah_thorpe@ccpsnet.net" <leah_thorpe@ccpsnet.net>, "ghthorpe@yahoo.com" <ghthorpe@yahoo.com>, Brown Pearson <cbpearson3@erg-homes.com>, Chris Eudailey <dewdrinkers@verizon.net>, Jack Wilson <jack@jackwilsonplc.com>, James Ingle <jingle@lifestylebuilders.com>, Michael Bricker <mbricker@balzer.cc>, Steve Conner <connerelec@aol.com>
Cc: "gholt@finerhomesinc.net" <gholt@finerhomesinc.net>, "Clements, Ron" <ClementsRo@chesterfield.gov>, "Witt, Rick" <WittR@chesterfield.gov>

Pat,

I am good for the 30th also. Good luck!

James Kester

From: Kindervater, Pat [mailto:KindervaterP@chesterfield.gov]
Sent: Monday, November 28, 2016 10:23 AM
To: leahbthorpe@gmail.com; leah_thorpe@ccpsnet.net; ghthorpe@yahoo.com; Brown Pearson <cbpearson3@erg-homes.com>; Chris Eudailey <dewdrinkers@verizon.net>; Jack Wilson <jack@jackwilsonplc.com>; James Ingle <jingle@lifestylebuilders.com>; James Kester <jkester@colonialplumbing.com>; Michael Bricker <mbricker@balzer.cc>; Steve Conner <connerelec@aol.com>
Cc: gholt@finerhomesinc.net; Clements, Ron <ClementsRo@chesterfield.gov>; Witt, Rick <WittR@chesterfield.gov>
Subject: Appeals Hearing for 16300 Longlands Road, Chesterfield, VA 23832 - New date 11/30/16

[Quoted text hidden]

Permit Review Results

PERMIT REVIEW RESULTS
Job Number: 20161129-049 **Job Status: Issued** **Job Address: 16300 LONGLANDS RD** **Utilities Fee Paid for NEW County Sewer/Water Connections: No** **NEW County Sewer Connections, Ready for Inspection: No** **Departments Other Than Building Inspection Requiring Final Inspections:** **None**

THE PERMIT APPLICANT WILL BE CONTACTED WHEN THE PERMIT IS READY FOR PICKUP.

CODE REVIEWS	REMARKS
No records to display.	

NON-CODE REVIEWS	REMARKS
No records to display.	

Return to Permit Details **Permit Data Search**

Gmail

Leah Thorpe <leahbthorpe@gmail.com>

Re: Tub squeak/ truss

Clements, Ron <ClementsRo@chesterfield.gov> Mon, Mar 13, 2017 at 9:38 AM
To: Greg Thorpe <ghthorpe@yahoo.com>, Nick Woodard <nwoodard@finerhomesinc.net>
Cc: Leah Thorpe <leahbthorpe@gmail.com>, "Witt, Rick" <WittR@chesterfield.gov>, "Davis, Chris" <DavisCh@chesterfield.gov>, "Greg Holt (gholt@finerhomesinc.net)" <gholt@finerhomesinc.net>

Mrs. Thorpe,

I reviewed the plans, the roof framing over the stairwell was designed as site built and the walls are bearing.

Cordially,

Ron

From: Greg Thorpe [mailto:ghthorpe@yahoo.com]
Sent: Thursday, March 09, 2017 2:28 PM
To: Nick Woodard <nwoodard@finerhomesinc.net>; Clements, Ron <ClementsRo@chesterfield.gov>
Cc: Leah Thorpe <leahbthorpe@gmail.com>
Subject: Re: Tub squeak/ truss

Hey Nick

[Quoted text hidden]

Gmail

Leah Thorpe <leahbthorpe@gmail.com>

Re: Tub squeak/ truss

Greg Thorpe <ghthorpe@yahoo.com> Mon, Mar 13, 2017 at 12:00 PM
To: "Clements, Ron" <ClementsRo@chesterfield.gov>
Cc: Leah Thorpe <leahbthorpe@gmail.com>, "Witt, Rick" <WittR@chesterfield.gov>, "Davis, Chris" <DavisCh@chesterfield.gov>, "Greg Holt (gholt@finerhomesinc.net)" <gholt@finerhomesinc.net>

Ron-

Very carefully selected words. Now that that is determined, what practice is used by framer (his experience)? Any notes or data on drawing providing wind, seismic, live and dead loads, etc. that roof structure would have to be built to. Is the method used prescribed somewhere? I would have a hard time believing that we have a engineered roof system with an area that is a fill in the blank "as needed".

Greg Thorpe
[Quoted text hidden]

Gmail

Leah Thorpe <leahbthorpe@gmail.com>

Re: Tub squeak/ truss

Leah Thorpe <leahbthorpe@gmail.com> Mon, Mar 13, 2017 at 12:25 PM
To: "Clements, Ron" <ClementsRo@chesterfield.gov>
Cc: Greg Thorpe <ghthorpe@yahoo.com>, Nick Woodard <nwoodard@finerhomesinc.net>, "Witt, Rick" <WittR@chesterfield.gov>, "Davis, Chris" <DavisCh@chesterfield.gov>, "Greg Holt (gholt@finerhomesinc.net)" <gholt@finerhomesinc.net>

Ron:

On the attached print out from the county website it says that plans should show "each rafter or truss individually drawn to show all bearing; all overbuilt roofs identified". When I got our construction documents from the county last June there were no drawings of the rafters I showed you Friday included.

I was also wondering if you were requesting a Manuel D calculation from Speeks? It is required by code and I think it should be included in our construction documents that are on file with the county.

Thank you,

Leah Thorpe
[Quoted text hidden]

Construction plan requirements.pdf
283K

Construction Project Types

New House

For additional information, download the Requirements for building a house or addition pamphlet, and a drawing example for a typical house.

Permits required:

1. Building permit
2. Auxiliary permits: One or more of the permit types listed below depending on the scope of work being performed:
    - Electrical permit
    - Plumbing permit
    - Gas permit
    - Mechanical permit

Application Submittal Requirements:

1. One (1) copy of Client Registration Form – if the contractor has never performed work in Chesterfield County before.
2. One (1) copy of the Residential Building Permit Application
3. One (1) copy of the plot plan showing setbacks from existing and proposed improvements. Acceptable plot plans contain the following:
    a. Entire property, showing all property line dimensions
    b. Existing dwelling, any other existing structures and location of proposed structure (all dimensions of proposed structure clearly indicated. For proposed accessory structures, indicate the overall height).
    c. Setbacks from the closest point of the proposed structure to property lines in each direction. Label the measurements from each property line to the closest point on the structure. Be as exact as possible and label the name of road clearly.
    d. All buffers, easements or floodplains located on your property (no structure may be located in these areas).

4. Two (2) copies of the construction plans – One set will be returned to the applicant with the issued permit. (For more detail on exactly what the construction plans require, see **Construction Plan Requirements** listed below.)
5. Two (2) copies of the engineered soil reports – Required to be prepared by a soil scientist or geotechnical engineer and submitted with each set of construction plans for all new houses. For more information see the Requirements for Soil Reports and Footings.
6. One (1) copy of the Agreement in Lieu of Erosion and Sediment Control Plan
7. One (1) copy of the Residential Plans Review Delivery form – Required for all building permits, this form indicates whether you would like the permit and forms mailed to you or held for three days at the Building Inspection office for you to pick up.
8. Payment of permit and other related fees – Residential Fee Schedule. Cash, checks, MasterCard, Visa, Discover and American Express cards are accepted.

Construction Plan Requirements: Minimum of two copies.

1. Shrink/swell soil report
2. A plat showing the location of the new structure to existing property lines
3. A footing and foundation plan
4. Basement plan
5. First floor and first floor framing plan
6. Second floor and second floor framing plan
7. Attic and attic floor framing plan
8. Roof and roof framing plan
9. Elevations
10. Structural cross section(s).

Plan Detail Requirements:

1. General Requirements for all Construction Drawings:
    a. Numbered – Every sheet of the plans numbered
    b. Scale – Structural plans drawn to architectural scale, typically 1/4", 3/16" or 1/8"
    c. Legible - Neat and legible; void of handwritten notes
    d. Orientation – All drawings in the same orientation on the sheets
    e. Non-structural details - Do not submit mechanical, electrical or plumbing (MEP) drawings. Plan reviewers do not review these for residential

plans; the field inspectors check for those issues. Do not submit cabinetry, stair, or non-structural details; they are not reviewed.

2. Plan Views - Footing and Foundation, Basement, First Floor, Second Floor, Attic, Roof, and Framing Plans - Show the following details:
   a. Perimeter and interior dimensions
   b. Room names on each floor plan
   c. Size and location of all doors and windows
   d. All interior load-bearing walls identified
   e. All beams, including garage door headers, identified. All beams carrying more than 4000lbs – identify column on each end.
   f. Size and direction of all floor joists and ceiling joists
      For I-joists or open-web joists, provide manufacturer's layout plan.
      Identification on plans similar to:
      Nominal lumber: 2x8 SYP @ 16" o.c.
      I-joists: Truss Joist, Series 230, 11-7/8", 16" o.c.
   g. Braced wall lines and the accompanying braced wall panel method(s) with calculation(s) clearly listed on each floor plan
   h. Full height, two-story walls (i.e. walls over 12 feet tall) engineered by a registered design professional
   i. Attic plan for all attics accessed by a permanent stair
   j. Any space intended for "future" use marked accordingly
   k. Each rafter or truss individually drawn to show bearing; all overbuilt roofs identified.
      For structures with truss roofs -- provide truss layout and individual truss detail sheets. The truss detail sheets do not need to be individually sealed for plan review, but must be sealed by a registered design professional at the time of inspection.

3. Sections – Include the following:
   a. At least one "through-structure" section, cut from the front to the rear of the structure, in a location that will show any non-standard section, such as a two-story family room or a room with a vaulted ceiling
   b. If there are multiple complicated spaces - separate sections to show all of the structure.
   c. Section cut lines (arrows) referenced on the plan views
4. Elevations – Include the following:
   a. Two elevations: from the front and side, showing exterior finishes
   b. If it has a basement - elevations showing approximate grade changes, doors and windows

Return to Obtaining a Permit/Design Criteria -- Residential

Gmail

Leah Thorpe <leahbthorpe@gmail.com>

Re: Tub squeak/ truss

Clements, Ron <ClementsRo@chesterfield.gov> Mon, Mar 13, 2017 at 1:50 PM
To: Leah Thorpe <leahbthorpe@gmail.com>
Cc: Greg Thorpe <ghthorpe@yahoo.com>, Nick Woodard <nwoodard@finerhomesinc.net>, "Witt, Rick" <WittR@chesterfield.gov>, "Davis, Chris" <DavisCh@chesterfield.gov>, "Greg Holt (gholt@finerhomesinc.net)" <gholt@finerhomesinc.net>

Mr. and Mrs. Thorpe,

The rafters are shown on the plans. They are in the detail titled "Roof Framing Plan" on page 6 of the plan set. 2"x 8" rafters are specified, 2"x6" would have met code. The roof load specified on page 4 of the plan set is 30 psf, 20 psf is required by code. We are not requesting a manual D calculation as providing such calculation is not required by code.

Cordially,

Ron

From: Leah Thorpe [mailto:leahbthorpe@gmail.com]
Sent: Monday, March 13, 2017 12:25 PM
To: Clements, Ron <ClementsRo@chesterfield.gov>
Cc: Greg Thorpe <ghthorpe@yahoo.com>; Nick Woodard <nwoodard@finerhomesinc.net>; Witt, Rick <WittR@chesterfield.gov>; Davis, Chris <DavisCh@chesterfield.gov>; Greg Holt (gholt@finerhomesinc.net) <gholt@finerhomesinc.net>

[Quoted text hidden]

[Quoted text hidden]

Gmail

Leah Thorpe <leahbthorpe@gmail.com>

Re: Tub squeak/ truss

Leah Thorpe <leahbthorpe@gmail.com> Mon, Mar 13, 2017 at 2:20 PM
To: "Clements, Ron" <ClementsRo@chesterfield.gov>
Cc: Greg Thorpe <ghthorpe@yahoo.com>, Nick Woodard <nwoodard@finerhomesinc.net>, "Witt, Rick" <WittR@chesterfield.gov>, "Davis, Chris" <DavisCh@chesterfield.gov>, "Greg Holt (gholt@finerhomesinc.net)" <gholt@finerhomesinc.net>

Mr. Clements:

The information on the county website clearly says that each rafter or truss must be individually drawn to show bearing points. The plans do not show that. Each truss is individually drawn. There is no drawing of the five stick built rafters. How do we know that the stick built rafters have a 30 psf loading capacity? How do we know that attaching a 2 x 8 to the 2 x 4 of an engineered truss does not compromise the loading capacity of the truss?

I will double check the Manuel D requirement. I felt sure that when you were at our house with Mr. Holt and Speeks on February 3rd that you said that a Manuel D was required because I remember asking you about it twice.

Leah Thorpe
[Quoted text hidden]

Gmail

Leah Thorpe <leahbthorpe@gmail.com>

Re: Tub squeak/ truss

Leah Thorpe <leahbthorpe@gmail.com> Wed, Mar 15, 2017 at 9:59 AM
To: "Clements, Ron" <ClementsRo@chesterfield.gov>
Cc: Greg Holt <gholt@finerhomesinc.net>, "Witt, Rick" <WittR@chesterfield.gov>, Greg Thorpe <ghthorpe@yahoo.com>, "Davis, Chris" <DavisCh@chesterfield.gov>, "Parthemos, Stylian" <ParthemosS@chesterfield.gov>

Mr. Clements:

I am just following up on my request that Building Inspections require that a Manuel D or an equivalent computation be submitted to Building Inspections for our home. According to 603.2 this should have been done before the system was installed. Also we would like to know if the roof framing over the stairwell complies to code.
Please let me know your decision on these items so that I may start the appeal process if needed.

Thank you.

Leah Thorpe
[Quoted text hidden]

Gmail

Leah Thorpe <leahbthorpe@gmail.com>

Re: Tub squeak/ truss

Leah Thorpe <leahbthorpe@gmail.com> Mon, Mar 13, 2017 at 9:55 PM
To: "Clements, Ron" <ClementsRo@chesterfield.gov>
Cc: gholt@finerhomesinc.net, "Witt, Rick" <WittR@chesterfield.gov>, Greg Thorpe <ghthorpe@yahoo.com>, "Davis, Chris" <DavisCh@chesterfield.gov>, Nick Woodard <nwoodard@finerhomesinc.net>

Mr. Clements :

Section 602.3 of the International Mechanical Code (attached) requires that ducts be sized according to Manuel D or other approved methods. I am requesting that you require Speeks to submit the Manuel D or calculation for duct sizing by another approved method for our home. Thank you.

Leah Thorpe
[Quoted text hidden]

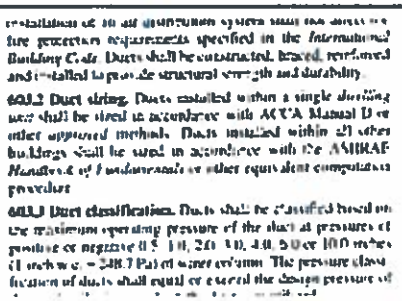
fire protection requirements specified in the *International Building Code*. Ducts shall be constructed, braced, reinforced and installed to provide structural strength and durability.

602.2 Duct sizing. Ducts installed within a single dwelling unit shall be sized in accordance with ACCA Manual D or other approved methods. Ducts installed within all other buildings shall be sized in accordance with the ASHRAE *Handbook of Fundamentals* or other equivalent computation procedure.

602.3 Duct classification. Ducts shall be classified based on the maximum operating pressure of the duct at pressures of positive or negative 0.5, 1.0, 2.0, 3.0, 4.0, 5.0 or 10.0 inches (1 inch w.c. = 248.7 Pa) of water column. The pressure classification of ducts shall equal or exceed the design pressure of

Screenshot_2017-03-13-21-42-14-2.png
418K

ation of an air distribution system shall not affect the rotection requirements specified in the *International ng Code*. Ducts shall be constructed, braced, reinforced stalled to provide structural strength and durability.

Duct sizing. Ducts installed within a single *dwelling* hall be sized in accordance with ACCA Manual D or *approved* methods. Ducts installed within all other ngs shall be sized in accordance with the ASHRAE *book of Fundamentals* or other equivalent computation dure.

Duct classification. Ducts shall be classified based on aximum operating pressure of the duct at pressures of ve or negative 0.5, 1.0, 2.0, 3.0, 4.0, 6.0 or 10.0 inches h w.c. = 248.7 Pa) of water column. The pressure classi- on of ducts shall equal or exceed the design pressure of

Gmail

Leah Thorpe <leahbthorpe@gmail.com>

Re: Tub squeak/ truss

Clements, Ron <ClementsRo@chesterfield.gov> Thu, Mar 16, 2017 at 9:06 AM
To: Leah Thorpe <leahbthorpe@gmail.com>
Cc: Greg Holt <gholt@finerhomesinc.net>, "Witt, Rick" <WittR@chesterfield.gov>, Greg Thorpe <ghthorpe@yahoo.com>, "Davis, Chris" <DavisCh@chesterfield.gov>, "Parthemos, Stylian" <ParthemosS@chesterfield.gov>

Mrs. Thorpe:

(Thorpe request) I am just following up on my request that Building Inspections require that a Manuel D or an equivalent computation be submitted to Building Inspections for our home. According to 603.2 this should have been done before the system was installed.

(County response) No, the Chesterfield County Building Inspection Department will not request the submission of an ACCA Manual D computation for your home.

Uniform Statewide Building Code section 109.1 Submittal of documents address the submittal of construction documents with the application for permit. USBC section 109.3 engineering details grants the building official authority to require mechanical plans and computations but submission of such documents is not mandated. In accordance with USBC 109.3, our policy is that mechanical, electrical and plumbing plans, and associated computations, are not required to be submitted with construction documents for single-family dwellings; therefore, we do not possess mechanical plans or Manual D computations as part of the plans submitted for the construction of your house in accordance with USBC section 109. The certificate of occupancy for your house was issued, and permit closed out, on June 30, 2015. The USBC does not grant building officials the authority to require a contractor submit construction documents, including computations, after the permit process is complete. The USBC does not require contractors to retain or produce construction documents after the permit process is complete.

Note that your reference to IMC section 603.2 is not applicable to your house. Your house was constructed in accordance with the 2009 Virginia Residential Code. The correct code reference is M1601.1 which states that duct systems shall be fabricated in accordance with the provisions of ACCA Manual D.

(Thorpe question) Also we would like to know if the roof framing over the stairwell complies to code.

(County response) Yes, the roof framing over the stairwell complies with code.

The site built rafters are shown on the approved building plans on file with the county. The truss layout plan shows no trusses over the stairwell. The rafters are drawn on the detail titled "Roof Framing Plan" on page 6 of the plan set. (5) 2"x 8" rafters and ceiling joists are detailed on the plan with bearing walls noted. The spans for the rafters comply with R802.5.1(1) and the ceiling joists comply with R802.4(1).

Ron Clements | Assistant Director

Chesterfield Building Inspection Department

Safe construction from the ground up

(804) 751-4163 | www.chesterfield.gov/bi/

9800 Government Center Parkway, Chesterfield, VA 23832-0040

From: Leah Thorpe [mailto:leahbthorpe@gmail.com]
Sent: Wednesday, March 15, 2017 9:59 AM
To: Clements, Ron <ClementsRo@chesterfield.gov>
Cc: Greg Holt <gholt@finerhomesinc.net>; Witt, Rick <WittR@chesterfield.gov>; Greg Thorpe <ghthorpe@yahoo.com>; Davis, Chris <DavisCh@chesterfield.gov>; Parthemos, Stylian <ParthemosS@chesterfield.gov>

[Quoted text hidden]

[Quoted text hidden]

Gmail

Leah Thorpe <leahbthorpe@gmail.com>

Re: Tub squeak/ truss

Leah Thorpe <leahbthorpe@gmail.com> Thu, Mar 16, 2017 at 11:03 PM
To: "Clements, Ron" <ClementsRo@chesterfield.gov>
Cc: Greg Holt <gholt@finerhomesinc.net>, "Witt, Rick" <WittR@chesterfield.gov>, Greg Thorpe <ghthorpe@yahoo.com>, "Davis, Chris" <DavisCh@chesterfield.gov>, "Parthemos, Stylian" <ParthemosS@chesterfield.gov>, "Casey, Joe" <CaseyJoe@chesterfield.gov>

Mr. Clements:

Thank you for your reply. I am sorry that I misunderstood what you said when you were at our home with Mr. Holt, Mr. Davis, and Speeks on February 3, 2017. I assumed when you said code requires a Manuel D that you meant Chesterfield County required it also. The 2009 Virginia Residential code requires a Manuel D be done for all new homes, and contractors are obligated to build homes according to code, but Chesterfield Building Inspections does not require contractors to submit official documents for HVAC but instead relies on inspectors to catch any violations. Am I understanding you correctly? I have listed the code violations regarding our HVAC system and crawl space below:

HVAC violations:

Duct work return material (Therma-Pan) installed improperly - R303.2
Duct work return material (Therma-Pan) does not have the proper R value - R403.2.1
Supply duct was smashed - not sure of specific code but know it is a violation
Supply duct is undersized for our unit - R303.2
Return duct is undersized for our unit - R303.2
Coil set had numerous tears in insulation.
Wire penetrations through sub-floor and plenum not sealed.
Wires penetrating plenum may be a code violation if they are not plenum rated per 602.2.1.1
When installing the system Speeks created a 58 inch hole in the foundation of a bearing wall.
Supply duct laying on earth - 603.14

Crawl space violations:

Missing insulation in crawl space
Crawl space penetrations not sealed - R402.4.1.1
Trash and building material left in crawl space
Missing vapor barrier in crawl space.

Wow! We must be really unlucky! The initial inspector, Speeks, you, Mr. Davis and Mr. Brooks missed all of these violations!

Speeks missed all of the HVAC violations while creating two additional violations when they moved our thermostat. We had to call them back to fix these violations after **WE** checked their work. Specifically, the thermostat wire was put through the metal duct work, and wire terminations were twisted and taped...no wire nuts were used. We called Speeks 15 days after we moved in about excessive condensation on the duct work **(code violation - 603.12. Condensation. Provisions shall be made to prevent the formation of condensation on the exterior of any duct).** Speeks told us this was normal and sent us a handout entitled "The Powhatan Rain Forest". Speeks has been to our house 6 times regarding issues with our HVAC system since we moved in and never saw any of these violations. We were told that it was operating normally.

On December 9th when you, Mr. Davis and Mr. Brooks were in the crawl space to inspect the re-install of the

HVAC - with the request from my husband to "look for anything that might be causing excessive dust in the house" - you all missed these violations. In fact my husband was told everything looked fine.

On December 10, 2016 when my husband and I went in the crawl space to check the foundation repair **WE** found the gaps in the return duct (maybe that is the cause of excessive dust), the supply duct hanging by glue strands from the Therma-Pan, and all of the other code violations listed above. It was very distressing to realize that our family had been breathing moldy crawl space air..

The four contractors that we requested to look at our HVAC install and tell us what needed to be done to fix it all came out from under our house shaking their heads saying that there was "no rhyme or reason" for the way our system was installed. One even said that it was an "embarrassment to the industry". But the funny thing was that they **ALL** immediately saw the code violations.

Clements statement - "The USBC does not grant building officials the authority to require a contractor submit construction documents, including computations, after the permit process is complete."?

Even with 10 code violations in relation to our HVAC system building inspections does not have the authority to request documentation? Structural repair drawings were submitted after the project was complete?

Clements statement: "Note that your reference to IMC section 603.2 is not applicable to your house. Your house was constructed in accordance with the 2009 Virginia Residential Code. The correct code reference is M1601.1 which states that duct systems shall be fabricated in accordance with the provisions of ACCA Manual D."

You are correct, I was not looking at the 2009 code mainly because when I was preparing our documentation for our appeal to the local appeal board I was very careful to reference 2009 code and was surprised to see that the documentation the county submitted referenced 2012 code. I think we can both agree that both codes say exactly the same thing. Also, I will apologize in advance if I reference the wrong version of the code or if I misinterpret what it says. It is not my job to know the building code but unfortunately my husband and I have been put in the position to take on this responsibility. When you were checking the Manuel J calculations that you requested from Speeks **(after the project was complete)**, you and my husband exchanged 20 emails before he finally convinced you that the supply duct was undersized. Your last response to his concerns was:

Clements statement: "If a system diagnostic is performed and the company identifies a problem that they believe is a code violation and we confirm it is a code violation we will cite it if it is not corrected. "

So we have to pay for a system diagnostic before the county will site any code violations?

Regarding the stick built rafters attached to the manufactured trusses:

(Thorpe question) Also we would like to know if the roof framing over the stairwell complies to code.

(County response) Yes, the roof framing over the stairwell complies with code.

The site built rafters are shown on the approved building plans on file with the county. The truss layout plan shows no trusses over the stairwell. The rafters are drawn on the detail titled "Roof Framing Plan" on page 6 of the plan set. (5) 2"x 8" rafters and ceiling joists are detailed on the plan with bearing walls noted. The spans for the rafters comply with

R802.5.1(1) and the ceiling joists comply with R802.4(1).

This is from Building Inspections website:

Plan Detail Requirements:

1. General Requirements for all Construction Drawings:
    a. Numbered – Every sheet of the plans numbered
    b. Scale – Structural plans drawn to architectural scale, typically 1/4", 3/16" or 1/8"
    c. Legible - Neat and legible; void of handwritten notes
    d. Orientation – All drawings in the same orientation on the sheets
    e. Non-structural details - Do not submit mechanical, electrical or plumbing (MEP) drawings. Plan reviewers do not review these for residential plans; the field inspectors check for those issues. Do not submit cabinetry, stair, or non-structural details; they are not reviewed.
2. Plan Views - Footing and Foundation, Basement, First Floor, Second Floor, Attic, Roof, and Framing Plans - Show the following details:
    a. Perimeter and interior dimensions
    b. Room names on each floor plan
    c. Size and location of all doors and windows
    d. All interior load-bearing walls identified
    e. All beams, including garage door headers, identified. All beams carrying more than 4000lbs – identify column on each end.
    f. Size and direction of all floor joists and ceiling joists
    For I-joists or open-web joists, provide manufacturer's layout plan.
    Identification on plans similar to:
    Nominal lumber: 2x8 SYP @ 16" o.c.
    I-joists: Truss Joist, Series 230, 11-7/8", 16" o.c.
    g. Braced wall lines and the accompanying braced wall panel method(s) with calculation(s) clearly listed on each floor plan
    h. Full height, two-story walls (i.e. walls over 12 feet tall) engineered by a registered design professional
    i. Attic plan for all attics accessed by a permanent stair
    j. Any space intended for "future" use marked accordingly
    k. Each rafter or truss individually drawn to show bearing; all overbuilt roofs identified.
    For structures with truss roofs – provide truss layout and individual truss detail sheets. The truss detail sheets do not need to be individually sealed for plan review, but must be sealed by a registered design professional at the time of inspection.

As you can see, item K states that plans should show "each rafter or truss individually drawn to show bearing" The plans that Finer Homes submitted to the county do not show the stick built rafters "individually drawn to show bearing".

Clements statement: "The site built rafters are shown on the approved building plans on file with the county. The truss layout plan shows no trusses over the stairwell. The rafters are drawn on the detail titled "Roof Framing Plan" on page 6 of the plan set. (5) 2"x 8" rafters and ceiling joists are detailed on the plan with bearing walls noted. The spans for the rafters comply with R802.5.1(1) and the ceiling joists comply with R802.4(1)."

The rafters are not individually drawn as the trusses are. Also, the fact that the rafters are connected to manufactured trusses is concerning. I would think that the engineer for the building would have to determine if the additional weight of the 2 x 8 rafters attached to a 2 x 4 on a manufactured truss would weaken the truss or negatively impact the load path to the foundation. I guess we will have to figure that out on our own.....

If it is your position that there is no code violation regarding the stick built roofing system over the stairwell and that Finer Homes has complied with county requirements in the plans that they submitted and Mr. Witt concurs then I will be appealing this decision.

I have attached pictures from our crawl space for individuals copied on this email that have not seen what a mess it is.

Leah Thorpe

[Quoted text hidden]

---

3 attachments

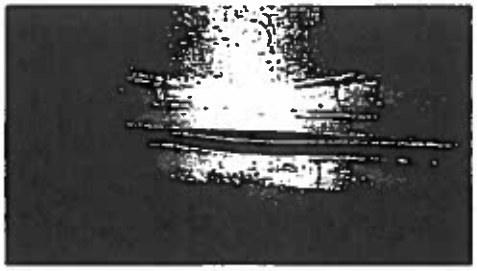

GAPS IN RETURN DUCT.jpg
4936K

WIRE PENTRATIONS IN PLENUM NOT SEALED.jpg
4627K

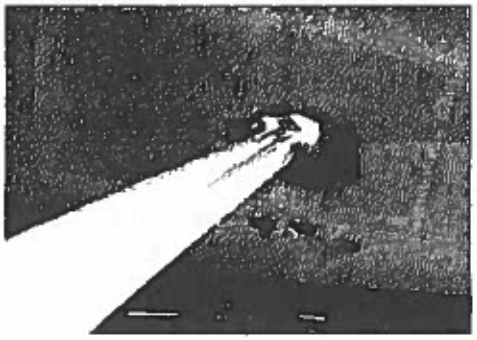

POORLY SEALED OPENINGS.jpg
530K

Gmail

Leah Thorpe <leahbthorpe@gmail.com>

Re: Tub squeak/ truss

Leah Thorpe <leahbthorpe@gmail.com> Thu, Mar 16, 2017 at 11:07 PM
To: "Clements, Ron" <ClementsRo@chesterfield.gov>
Cc: Greg Holt <gholt@finerhomesinc.net>, "Witt, Rick" <WittR@chesterfield.gov>, Greg Thorpe <ghthorpe@yahoo.com>, "Davis, Chris" <DavisCh@chesterfield.gov>, "Parthemos, Stylian" <ParthemosS@chesterfield.gov>, "Casey, Joe" <CaseyJoe@chesterfield.gov>

ADDITIONAL PICTURES ATTACHED
[Quoted text hidden]

5 attachments

RUSTY PIE BOXES.jpg
4661K

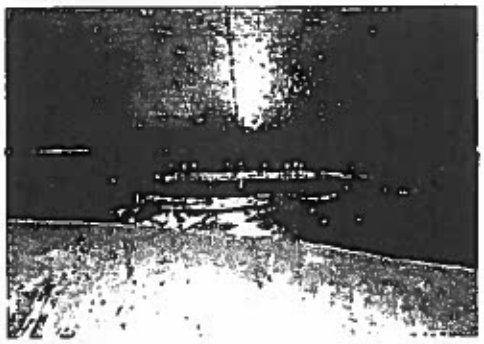

SUPPLY DUCT HANGING BY GLUE STRANDS.jpg
1059K

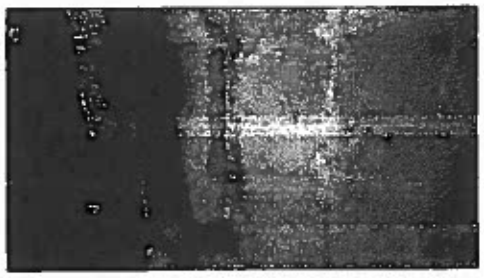

WATER SEEPING THROUGH BLOCK.jpg
4908K

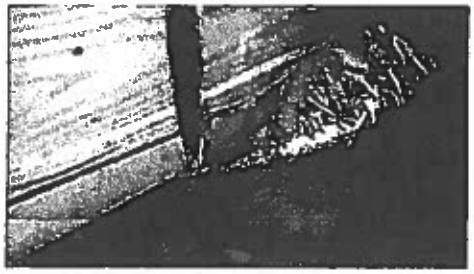

SMASHED DUCT.jpg
4416K

County Handout to Appeals Board.pdf
12473K

20161129-049 Admin Permit
Finer Homes / 2012 IRC
16300 Longlands Rd 12/1/16

Pro-Inspections, Inc.

P.O. Box 1316 Powhatan Va. 23139 Office 804-814-8084

Reviewed date November 29, 2016

Finer Homes
Po box 9190
Chesterfield Va 23832

RE: Framing Review
10 Harper Mill
16300 Longland rd.

12-1-16

Per your request, we made a review for the above referenced home site. This review was focus on the the over notch joist, the hole in foundation at HVAC and gable end truss. The following is an outline of our repairs after our review.

Framing:

- The floor system in the foundation is 11 7/8" LPI20 I joists @ 19.2oc
- The load at the bath room is 286lb and 1301 to 1505ft.lb that bear directly on a single span i-joist
- The I-joist shall be reinforced with an L 1 ½"x1 ½" x1/4" at a span of 6'
- The I-joist face shall be firred out with a ½"x1 ½"x 6' plywood.
- The I-joist shall be reinforcement with the angle mounted to the side of the notched and center over it.
- The angle shall be connected to the top flange with 10d at 6" oc (see detail)
- The HVAC with two ductwork openings up to 60" of block in the foundation wall.
- The foundation wall at the HVAC ductwork shall be placing 1 -11 7/8" LVL 1.8 E replacing the rimboard and cutting back the floor joists to make the LVL flush mounted. (see detail)
- The I joists above the HVAC opening shall be hung with a ITS2.56/11.88 hanger.
- Truss window shall be reinforced with a secondary stiff back placed 8'-0" from floor and shall be connected to each stud in the truss with 2-16d nails . (see detail)

Should you have any questions please feel free to contact us.

Sincerely,

Charles Toney, P.E.

Chesterfield County

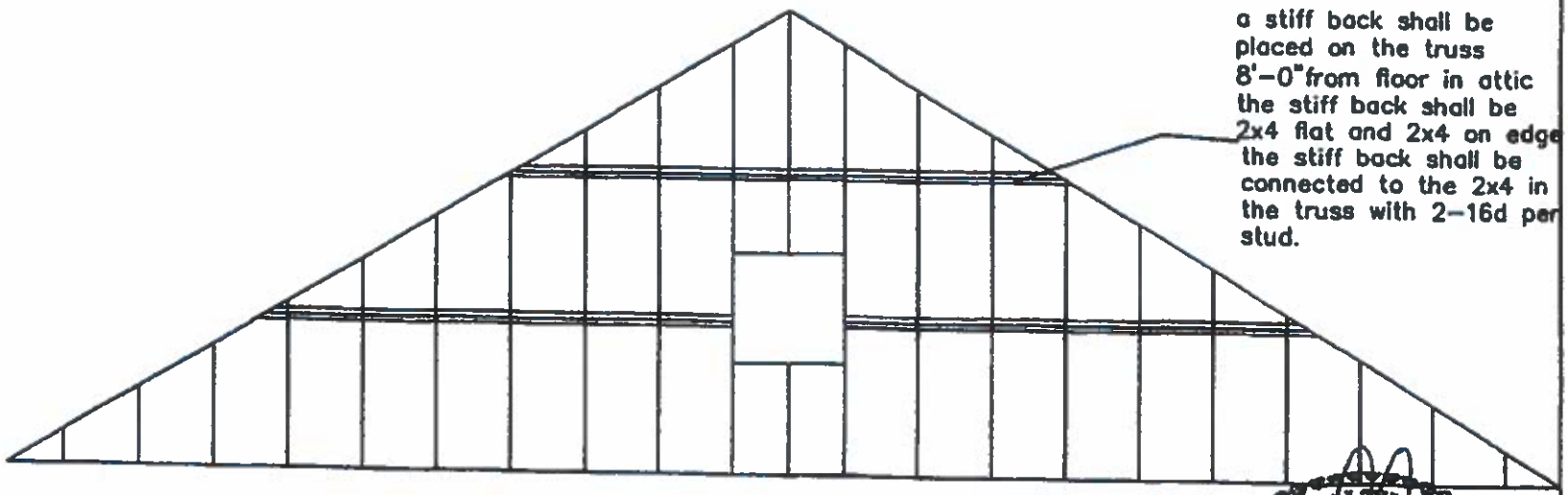

a stiff back shall be placed on the truss 8'-0" from floor in attic the stiff back shall be 2x4 flat and 2x4 on edge the stiff back shall be connected to the 2x4 in the truss with 2-16d per stud.

Chesterfield County
Building Inspection

COMMONWEALTH OF VIRGINIA
CHARLES ALLEN
TONEY
No. 32757
12/1/12
PROFESSIONAL ENGINEER

Pro-Inspections Inc.
2517 Anderson Hwy. Suite 2
PO Box 1318
Powhatan, va. 23139

scale
Harpers Mill lot 10
Finer

A-1

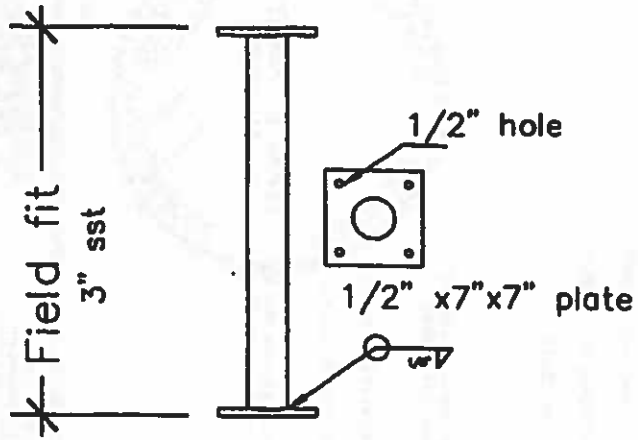

Column Detail

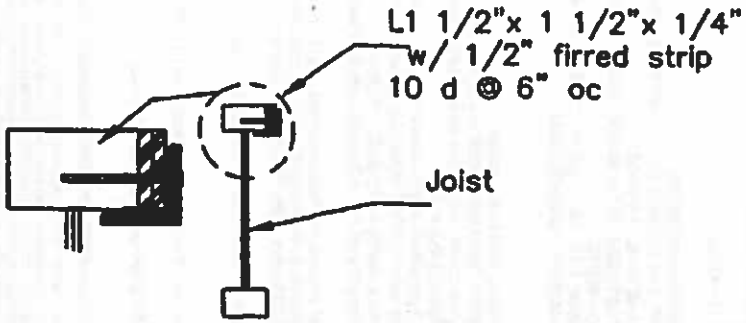

Joist Repair

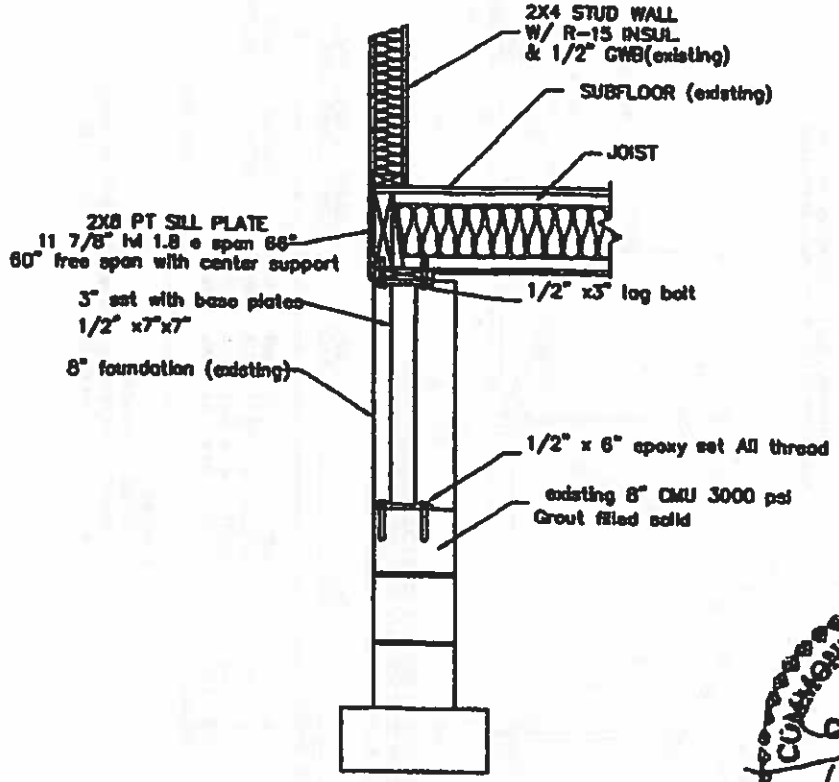

Repair DETAIL

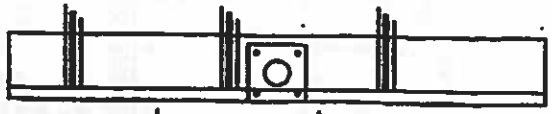

Layout

Foundation Repair DETAIL

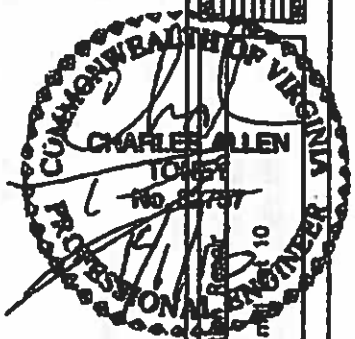

Pro.Inspections Inc.
2517 Anderson Hwy. Suite 2
PO Box 1316
Powhatan,va. 23139

Foundation Repair
Harper [illegible] 10

A-1

Chesterfield County
[illegible] of Building Inspection

Job	Truss	Truss Type	Qty	Ply	SAVANNAH W/ ROG & PART ATTIC
25017	T-1	ROOF SPECIAL	9	1	E50028

Job Reference (optional)

Structural Technologies, Colonial, VA 23047 — 7.840 s Nov 19 2015 MiTek Industries, Inc. Tue Jun 07 13:24:07 2016 Page 1

(D:NNBGyXDZHd0w6OHgnER7yOzP-B_jZ8vkTsr7zKu3GIGRJR0qSOplayTaZMAq.cz8xc

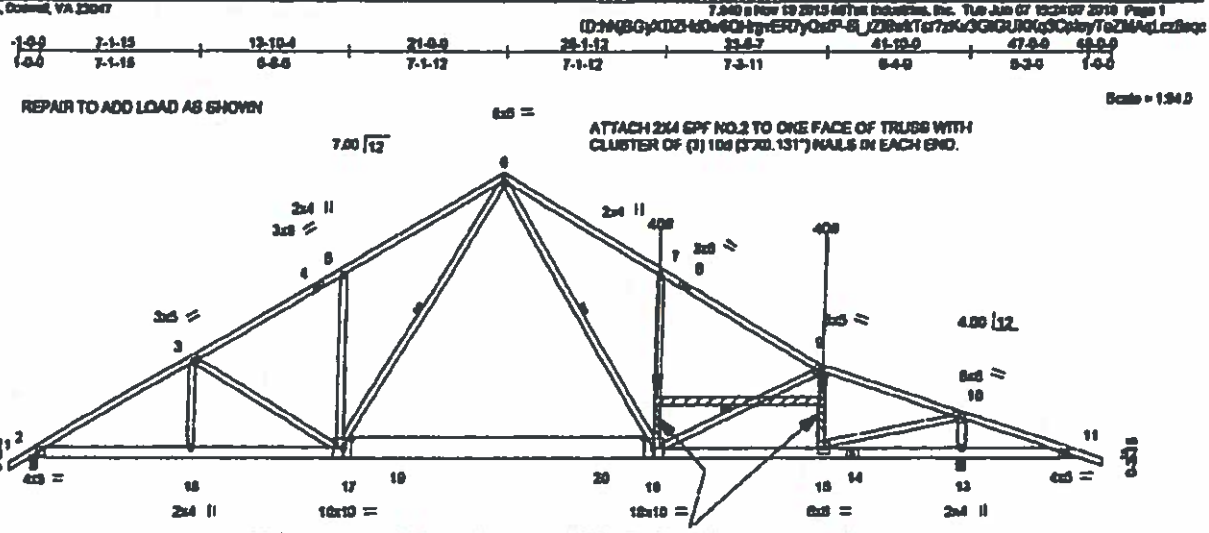

7-1-15	13-10-4	28-1-12	35-8-7	41-10-0	47-0-0	47-0-0
7-1-15	6-8-5	14-3-8	7-3-11	6-4-0	5-2-0	0-0-0

Plate Offsets (X,Y)-- [2:0-3-4,0-1-3], [16:0-4-12,0-5-0], [17:0-4-12,0-5-0]

LOADING (psf)		SPACING- 2-0-0		CSI		DEFL.	in	(loc)	l/def	L/d	PLATES	GRIP
TCLL	20.0	Plate Grip DOL	1.15	TC	0.98	Vert(LL)	-0.27	16-17	>999	240	MT20	244/190
TCDL	10.0	Lumber DOL	1.15	BC	0.78	Vert(TL)	-0.54	16-17	>918	180		
BCLL	0.0 *	Rep Stress Incr	YES	WB	0.78	Horz(TL)	0.09	13	n/a	n/a		
BCDL	10.0	Code IRC2009/TPI2007		(Matrix)							Weight: 336 lb	FT = 3%

LUMBER-
TOP CHORD 2x4 SP No.1 *Except* 9-12,1-4: 2x4 SP No.2
BOT CHORD 2x6 SP No.2 *Except* 16-17: 2x12 SP No.2
WEBS 2x4 SP No.3 *Except* 10-15: 2x4 SP No.2

BRACING-
TOP CHORD Sheathed.
BOT CHORD Rigid ceiling directly applied or 6-0-0 oc bracing.
WEBS 1 Row at midpt 6-17, 6-16, 9-16

REACTIONS. (lb/size) 2=1907/0-4-0, 13=2417/0-4-0
Max Horz 2=-300(LC 4)
Max Uplift2=-241(LC 6), 13=-410(LC 7)

FORCES. (lb) - Maximum Compression/Maximum Tension
TOP CHORD 1-2=0/33, 2-3=-3219/394, 3-4=-2766/342, 4-5=-2584/378, 5-6=-2764/513, 6-7=-2755/498, 7-8=-2556/351, 8-9=-2755/327, 9-10=-2645/282, 10-11=-423/648, 11-12=0/22
BOT CHORD 2-19=-330/2681, 17-19=-331/2668, 17-19=-50/1632, 19-20=-50/1632, 16-20=-50/1632, 15-16=-187/2483, 14-15=-560/439, 13-14=-560/439, 11-13=-560/439
WEBS 3-18=0/340, 3-17=-468/169, 5-17=-436/214, 6-17=-298/1323, 6-16=-240/1304, 7-16=-487/238, 9-16=-281/79, 9-15=-605/201, 10-15=-553/3103, 10-13=-2187/487

NOTES-
1) Unbalanced roof live loads have been considered for this design.
2) Wind: ASCE 7-05; 90mph; TCDL=6.0psf; BCDL=3.0psf; h=25ft; Cat. II; Exp B; enclosed; MWFRS (low-rise) gable end zone and C-C Exterior(2) zone; cantilever left and right exposed ; end vertical left and right exposed;C-C for members and forces & MWFRS for reactions shown; Lumber DOL=1.15 plate grip DOL=1.15
3) This truss has been designed for a 20.0 psf bottom chord live load nonconcurrent with any other live loads.
4) * This truss has been designed for a live load of 20.0psf on the bottom chord in all areas where a rectangle 3-6-0 tall by 2-0-0 wide will fit between the bottom chord and any other members, with BCDL = 10.0psf.
5) Provide mechanical connection (by others) of truss to bearing plate capable of withstanding 241 lb uplift at joint 2 and 410 lb uplift at joint 13.
6) "Semi-rigid pitchbreaks with fixed heels" Member end fixity model was used in the analysis and design of this truss.
7) Hanger(s) or other connection device(s) shall be provided sufficient to support concentrated load(s) 40 lb down and 9 lb up at 28-1-12, and 40 lb down and 9 lb up at 35-7-10 on bottom chord. The design/selection of such connection device(s) is the responsibility of others.
8) In the LOAD CASE(S) section, loads applied to the face of the truss are noted as front (F) or back (B).

LOAD CASE(S) Standard
1) Dead + Roof Live (balanced) + Uninhab. Attic Storage: Lumber Increase=1.15, Plate Increase=1.15
Uniform Loads (plf)
Vert: 1-8=-60, 8-9=-60, 9-12=-60, 2-19=-20, 19-20=-60, 11-20=-20

Chesterfield County
Dept. of Building Inspection

COMMONWEALTH OF VIRGINIA
FRANK R. LASSITER
Lic. No. 034728
PROFESSIONAL ENGINEER

June 8,2016

Continued on page 2

WARNING - Verify design parameters and READ NOTES ON THIS AND INCLUDED MiTEK REFERENCE PAGE BR-7473 rev. 10/03/2015 BEFORE USE.
Design valid for use only with MiTek® connectors. This design is based only upon parameters shown, and is for an individual building component, not a truss system. Before use, the building designer must verify the applicability of design parameters and properly incorporate this design into the overall building design. Bracing indicated is to prevent buckling of individual truss web and/or chord members only. Additional temporary and permanent bracing is always required for stability and to prevent collapse with possible personal injury and property damage. For general guidance regarding the fabrication, storage, delivery, erection and bracing of trusses and truss systems, see ANSI/TPI1 Quality Criteria, DSB-89 and BCSI Building Component Safety Information available from Truss Plate Institute, 218 N. Lee Street, Suite 312, Alexandria, VA 22314.

TRENCO
A MiTek Affiliate
818 Soundside Road
Edenton, NC 27932

Job	Truss	Truss Type	Qty	Ply	SAVANNAH W/ ROG & PART ATTIC
25917	T-1VX	COMMON	6	1	Job Reference (optional)

Structural Technologies, Doswell, VA 23047 — Run: 7.600 s Oct 3 2014 Print: 7.600 s Oct 3 2014 MiTek Industries, Inc. Fri Mar 20 14:36:35 2015 Page 1
ID:NEBGyXDZHdDw6CHrpyER7yOsfP-F7B1R4QBncPWOfqGUA0McLs09bAfRVKgu630zZ0b8

1-0-0 | 8-7-12 | 14-5-10 | 21-0-0 | 28-4-12 | 34-11-8 | 42-0-0
1-0-0 | 8-7-12 | 5-9-14 | 6-6-6 | 7-4-12 | 6-8-13 | 7-0-7

Scale = 1:77.3

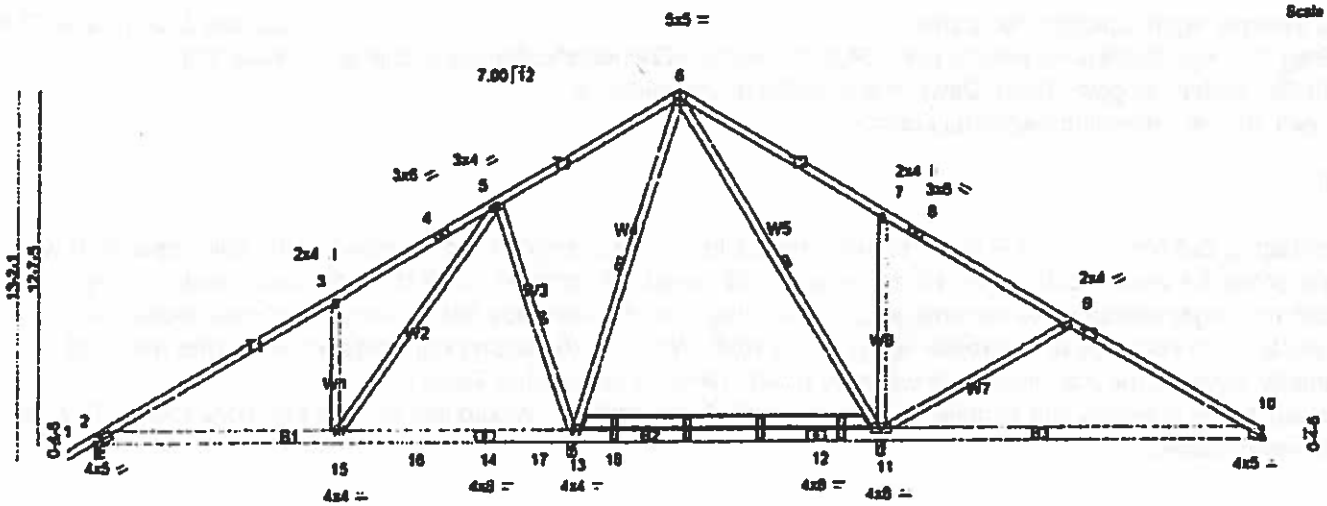

8-7-12 | 17-1-4 | 28-4-12 | 42-0-0
8-7-12 | 8-6-8 | 11-3-8 | 13-7-4

Plate Offsets (X,Y)-- [2:0-3-3,0-1-14], [10:0-1-4,0-0-3]

LOADING (psf)		SPACING-	2-0-0	CSI.		DEFL.	in	(loc)	l/defl	L/d	PLATES	GRIP
TCLL	20.0	Plate Grip DOL	1.15	TC	0.76	Vert(LL)	-0.36	10-11	>448	240	MT20	244/190
TCDL	10.0	Lumber DOL	1.15	BC	0.89	Vert(TL)	-0.67	10-11	>242	180		
BCLL	0.0 *	Rep Stress Incr	YES	WB	0.54	Horz(TL)	0.01	10	n/a	n/a		
BCDL	10.0	Code IRC2009/TPI2007		(Matrix)							Weight: 268 lb	FT = 5%

LUMBER-
TOP CHORD 2x4 SP No.2
BOT CHORD 2x6 SP No.2 *Except*
B3: 2x6 SP No.1D
WEBS 2x4 SP No.3

STACH (1) 2X6 ATOP BOTTOM CHORD AS SHOWN. ATTACH W/ 2X4 X 11" BLOCKS SET 36" OC ONE FACE. USE (4) 16D BOX NAILS EACH MEMBER EACH CONNECTION.

BRACING-
TOP CHORD Structural wood sheathing directly applied or 5-2-7 oc purlins.
BOT CHORD Rigid ceiling directly applied or 6-0-0 oc bracing. Except:
10-0-0 oc bracing: 2-18.
WEBS 1 Row at midpt 5-13, 6-13, 6-11

MiTek recommends that Stabilizers and required cross bracing be installed during truss erection, in accordance with Stabilizer Installation guide.

REACTIONS. (lb/size) 2=815/0-4-0, 13=1657/0-3-8, 11=1248/0-3-8, 10=368/Mechanical
Max Horz 2=293(LC 5)
Max Uplift 2=-81(LC 6), 13=-215(LC 6), 11=-235(LC 7), 10=-21(LC 7)
Max Grav 2=820(LC 10), 13=1657(LC 1), 11=1250(LC 11), 10=397(LC 11)

FORCES. (lb) - Maximum Compression/Maximum Tension
TOP CHORD 1-2=0/33, 2-3=-633/88, 3-4=-613/185, 4-5=-455/197, 5-6=-42/402, 6-7=-1/324, 7-8=-36/327, 8-9=-73/144, 9-10=-343/58
BOT CHORD 2-15=-137/448, 15-16=-94/191, 14-16=-94/191, 14-17=-94/191, 13-17=-94/191, 13-18=-137/233, 12-18=-137/233, 11-12=-137/233, 10-11=-14/214
WEBS 3-15=-435/211, 5-15=-219/877, 5-13=-703/256, 6-13=-538/34, 6-11=-170/0, 7-11=-458/225, 9-11=-412/189

NOTES-
1) Unbalanced roof live loads have been considered for this design.
2) Wind: ASCE 7-05; 90mph; TCDL=6.0psf; BCDL=3.0psf; h=25ft; Cat. II; Exp B; enclosed; MWFRS (low-rise) gable end zone and C-C Exterior(2) zone; cantilever left and right exposed ; end vertical left and right exposed;C-C for members and forces & MWFRS for reactions shown; Lumber DOL=1.15 plate grip DOL=1.15
3) This truss has been designed for a 20.0 psf bottom chord live load nonconcurrent with any other live loads.
4) * This truss has been designed for a live load of 20.0psf on the bottom chord in all areas where a rectangle 3-6-0 tall by 2-0-0 wide will fit between the bottom chord and any other members, with BCDL = 10.0psf.
5) Refer to girder(s) for truss to truss connections.
6) Provide mechanical connection (by others) of truss to bearing plate capable of withstanding 81 lb uplift at joint 2, 215 lb uplift at joint 13, 235 lb uplift at joint 11 and 21 lb uplift at joint 10.
7) This truss is designed in accordance with the 2009 International Residential Code sections R502.11.1 and R802.10.2 and referenced standard ANSI/TPI 1.
8) "Semi-rigid pitchbreaks with fixed heels" Member end fixity model was used in the analysis and design of this truss.

LOAD CASE(S) Standard

COMMONWEALTH OF VIRGINIA
REPAIR
JAMES H. FLETCHER
June 16, 2016
No. 26629
PROFESSIONAL ENGINEER

Westmoreland County
Dept. of Building Inspection

Gmail

Leah Thorpe <leahbthorpe@gmail.com>

I-joist repair warranty

Greg Thorpe <ghthorpe@yahoo.com> Tue, Jan 3, 2017 at 9:57 PM
To: Greg Holt <gholt@finerhomesinc.net>, Ron Clements <ClementsRo@chesterfield.gov>, Rick Witt <WittR@chesterfield.gov>, Chris Davis <DavisCh@chesterfield.gov>
Cc: Leah Thorpe <leahbthorpe@gmail.com>

All-

I contacted Cliff McMann of LP Corp. to see if he could get me manufacturers approval of the joist repair that was done under the master bathtub by Finer Homes. Cliff called me back on 12/22 to let me know that LP Corp. would no longer warranty the repaired joist. Again, the manufacturer was not contacted per manufacturer's instructions to come up with a repair along with a RDP. Who has the appropriate credentials to give me a full warranty equal to the manufacturers warranty now? Would it be Charles Toney?
The tub is still creaking and popping as the tub is filled and drained. Would like to have someone look at this as soon as possible.

Thank you,

Greg Thorpe

Gmail

Leah Thorpe <leahbthorpe@gmail.com>

Repair work approval status/ duct work defects

Greg Thorpe <ghthorpe@yahoo.com> Wed, Dec 21, 2016 at 11:54 AM
To: Ron Clements <ClementsRo@chesterfield.gov>, Rick Witt <WittR@chesterfield.gov>, BrooksJ@chesterfield.gov, Chris Davis <DavisCh@chesterfield.gov>, Leah Thorpe <leahbthorpe@gmail.com>, Greg Holt <gholt@finerhomesinc.net>

Hey Ron,

Any word yet on whether the truss chord repair was approved by the truss manufacturer and Charles Toney?
Did Mr. Brooks get a chance to look at the HVAC equipment calculations? I found our copy if he needs it emailed to him.
We went in the crawl space to temporarily tape up the Thermo-pan and found a couple more items. The large round duct feeding the Thermo-pan has separated where the two connect.
Also, there is a penetration into the joist space used as the return for two non-metallic jacketed cables (the stove and a kitchen branch circuit). After entering the joist space they go up into the subfloor/wall. It appears this is legal per NEC if they are running perpendicular through the space. Please verify my interpretation of article 300.22. The problem is they tried to seal the cable penetrations with pieces of cardboard. I have attached pictures. Hard to believe joist in last picture is only 1-1/2 years old.

Thank you,

Greg Thorpe

Round duct separating from thermo-pan

NM jacketed cable penetrating joist space used for return

3 attachments

image2.JPG
110K

image3.JPG
77K

image4.JPG
109K

DRIVEWAY DRAINAGE

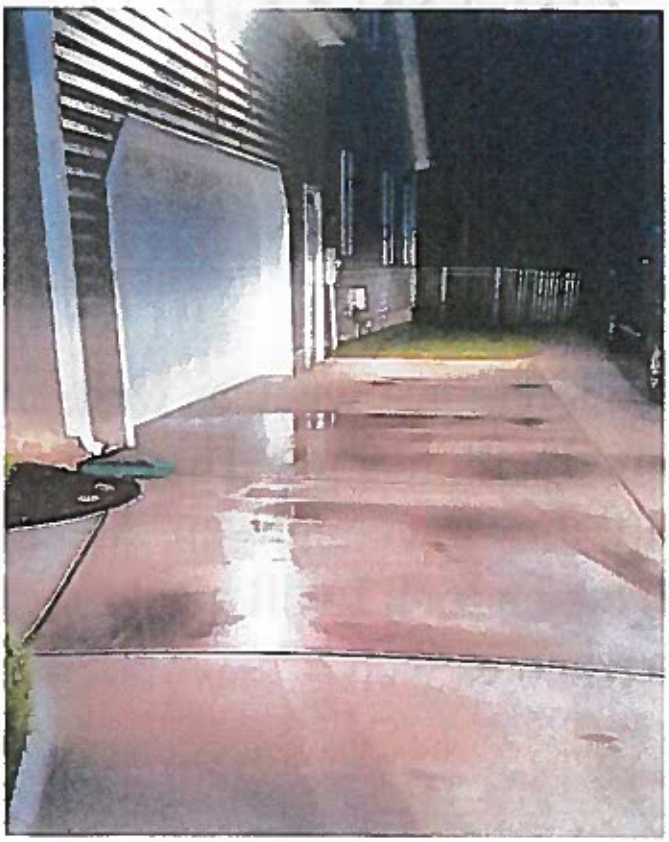

Told Finer about the problem at our 90 day review appointment on October 1st.

DRIVEWAY DRAINAGE

- On 11-16-15 got this message from Nick Woodward:
- Good afternoon
  Spoke to bob at Garlitz concrete last week as well. They currently are slammed with installs. They are not looking at repairs until they get caught up. As soon as he can get out to take a look I will meet him, I will let you know when as well.

- **E-mail on March 17, 2016**
- Hardwood guys and myself will be there about 8-830am. Followed by the siding guy, plumbers and Stockners. I do not have the doors in yet and **Garlitz is unavailable for tomorrow but will meet us out there one day next week.**

- **E-mail on March 28, 2016**
- There is no warranty on concrete, I will have to meet with Garlitz on site to look at your concerns. **Bob Garlitz said he would take a look this week**, just waiting to hear when he is available. I will let you know when that is as soon as I find out as well. His number is (804) 840-3619.

- **<u>E-mail on April 7, 2016</u>**

  Hey Nick,
  Any word from Apple Doors on the door seals around garage door? Has concrete contractor gotten back with you?
  Thank you, Greg Thorpe

- **<u>Reply on April 11, 2016</u>**

  Good morning
  Haven't heard from either yet, reaching out again this morning to both again.

  Nick Woodard

- **April 22, 2016**
  Hi Nick:
  I called and left a message for you on Wednesday but I have not heard back so I thought I would try an e-mail. Leah talked to Bob Garlitz on Tuesday about the water leaking into the garage and **he indicated that the "fix" for this would be for Apple Door to put weatherstripping on the bottom of the garage door**. Leah said that was not what was settled on when Jeff Coates was at the house looking at it. Please call me.
  Greg Thorpe

- Good afternoon
  I apologize for the delayed response. It has been a hectic week to say the least. I had asked Jeff to give you a call to explain the driveway situation but evidently that didn't happen.Jeff came back out after we originally met to look at the driveway while it was raining. He said he could see the small area that had about 1/8" water standing. The depression is so minimal that tearing out that slab to re pour is not necessary. Tearing that up would risk damage to the surrounding concrete as well as the issue of the finish most likely not matching. **The driveway is well within industry standard. It is not uncommon during heavy rains for water to make it's way under the garage door**. Jeff and bob are confident the premium rubber strip on the bottom of the door will keep the water out for you during these rains.
  Nick Woodward

- April 22, 2016

  Apple was just here and thought that from where the expansion joint in concrete was, it was just going to pool up further and get under from the joint. **When Jeff and you were here, we saw more than a 1/8" depression. There was a depression running right to the door and under.**Originally the downspout was draining onto the driveway, making the flooding worse. I had redirected it temporarily, to reduce damage to items we had stored in garage during move.
  I am not leaving that spout running along the house, knowing what it can do to the foundation.
  We will take note of Finer Homes decision on this matter.
  Greg

- **On Apr 24, 2016**
  Nick
  Greg forwarded me your email and I wanted to find out when Jeff Coates came back out here.
  Apple Door was here Friday and adjusted the stops so the door meets up with the weather seal at the top. **He discussed the water leaking into the garage with Greg and told him that putting a seal on the bottom of the door would not solve the problem.** He called his boss and told Greg that his boss was going to talk to Finer Homes about it.
  Please let us know what is going to be done about the water leaking into the garage and the continued problem with the wood floor.
  Leah Thorpe

- **April 27,2016**

Good afternoon
I spoke with apple, they said you asked the installer not to put the upgraded seal on the bottom of the door. We believe the upgraded seal will keep the water out of the garage. **They also have a threshold that can be attached the garage floor that the door closes into that can keep water out, those are more for low garage areas that have high water on the outside. I believe they can deter up to 3" of standing water.** Jeff came out the day after we met on site. I do not know what time. He saw the area while it was raining and **is confident there is no need to tear out the existing concrete**.

We will be re visiting the hardwood next week with rich dec, may 6.

Nick Woodard

- April 27, 2016

  Nick
  I did not tell Apple Door not to put the seal on. In fact **I was very emphatic that if putting the seal on is what finer homes had told him to do then I could not tell him not to.** The installer said let me call my boss. He went to his truck and called his boss and came back and told me that they would talk to you guys about it not working being over an expansion joint. As far as putting a threshold down, I am quite sure that would keep the water out of the garage. As you say it is used for garages that are on low-lying areas and could keep up to three feet of water out. However **you seem to be overlooking the other problem that would cause which is water lying against the wooden edge of the garage and rotting the wood. Fixing one problem and creating another even worse problem does not seem to be the smart thing to do.** I was home the entire day on Friday when Jeff came out to look at the leakage problem while it was raining. It seems odd that Jeff would not even knock on the door and talk to me.
- Greg Thorpe

- April 28, 2016
  Good morning
  When I spoke with apple door they said they were told not to put the primo in strip on the door. I'm not sure which installer came out or who he talked to but that's what they told me when they called to let me know what was going on.
  I have spoken to Jeff and bob at Garlitz about the concrete. They do not see risking the surrounding concrete getting damaged by ripping out a slab as necessary. **With the way your lot is situated the driveway buts right up to the garage slab, and falls of the side gradually. With a moderate to heavy rain the water is going to puddle as it moves off due to the fact there is not a significant amount of fall on this lot. It is not uncommon to have water seep under garage doors.** During heavy rains in particular even on lots that have an apron outside the garage slab and a great deal of fall in the drive, water landing around the door can still get in at times.
  After speeding with Jeff and bob **I have also spoken to Greg on the subject. We will not be tearing out a section of concrete here. Nor would any other builder**. We are willing to have apple door install the premium weather stripping to try and help keep water from seeping under the door. Apple door mentioned they have a threshold they can install as well. Also something we would be willing to do for you guys to help out. **Neither of these are solutions to a problem we have to fix. We understand you do not want water getting into the garage, these are a couple options we feel would help with that situation that we would be willing to have done for you.**

  Nick Woodard

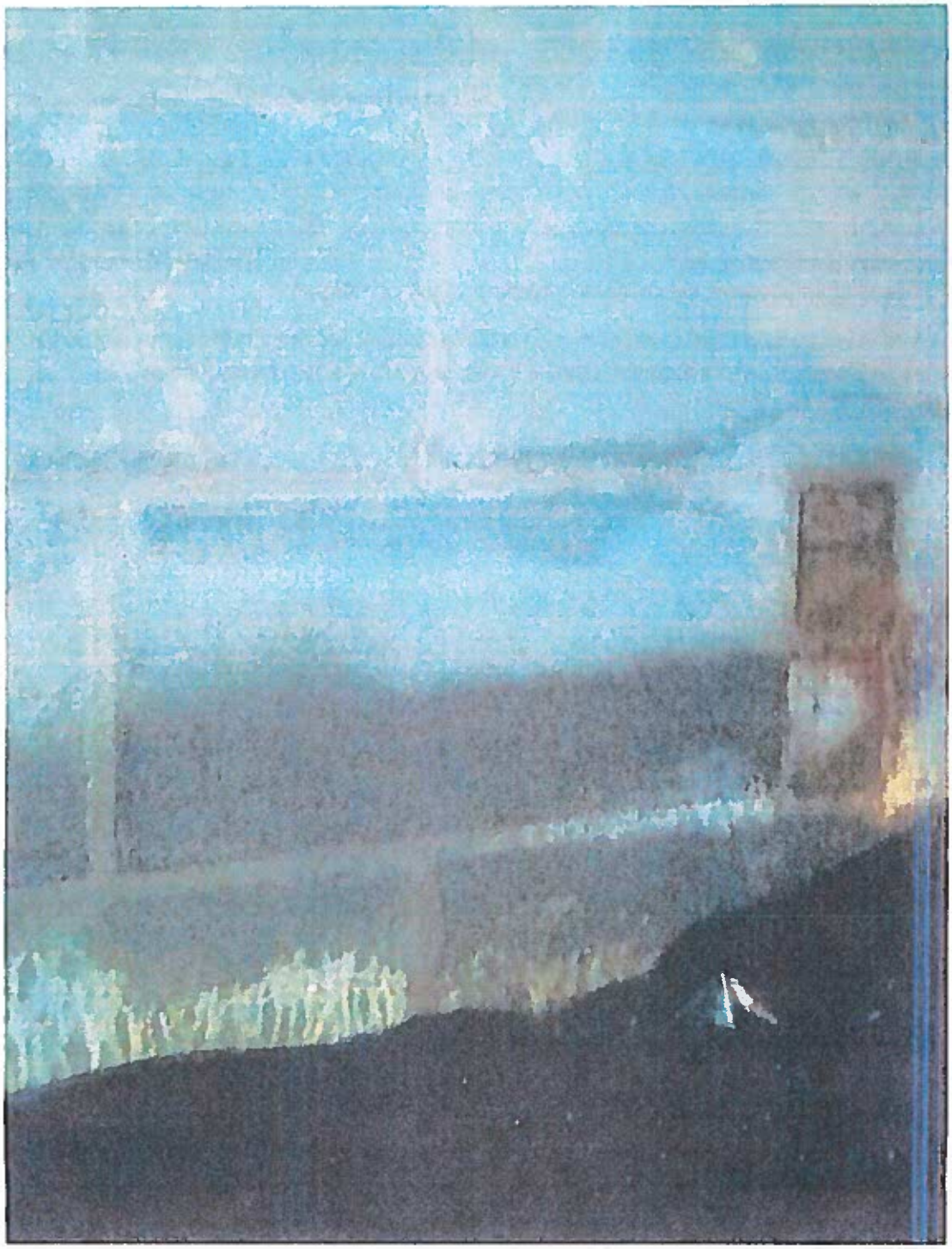

Gmail

Leah Thorpe <leahbthorpe@gmail.com>

Concrete

Nick Woodard <nwoodard@finerhomesinc.net> Fri, Aug 26, 2016 at 2:17 PM
To: Leah Thorpe <leahbthorpe@gmail.com>, Greg Thorpe <ghthorpe@yahoo.com>

We have spoken to mr kindervater and Garlitz and both are available to meet Monday at 11am at your house to inspect the driveway. Just want to make sure you guys are okay with us taking a look Monday.

Nick Woodard
Customer Service Supervisor
804-920-1966
Finer Homes Inc.

Gmail

Leah Thorpe <leahbthorpe@gmail.com>

Driveway

Greg Thorpe <ghthorpe@yahoo.com> Tue, Sep 6, 2016 at 8:52 PM
To: Leah Thorpe <leahbthorpe@gmail.com>

Begin forwarded message:

From: Greg Thorpe <ghthorpe@yahoo.com>
Date: September 4, 2016 at 12:00:08 PM EDT
To: Nick Woodard <nwoodard@finerhomesinc.net>
Cc: Greg Holt <gholt@finerhomesinc.net>
Subject: Driveway

Nick,

We see two options to repair the driveway:

1. Replace the single slab that is pooling and draining to the garage. This option would require careful planning and installation as to match elevations of neighboring slab pieces and still drain away from house. We realize it will not meet the 2%, but if it drains like the others, we will be fine with it.

2. Replace ALL slabs necessary to allow proper drainage off the driveway. This would include repairing any lawn and sprinkler damage. We feel the elevation change near property line would not be greatly affected since the water does not drain off driveway there anyway.

We did a hose test and every slab piece properly drains to the end pieces along property line (except slab piece in question) and runs towards the back. None of the water actually drains into grass along property line which is fine as long as water continuously flows toward back and then into grass.

Neither of these two options allow you to put a harsh or dramatic channel in the driveway.

Thank you,

Greg and Leah Thorpe

Gmail

Leah Thorpe <leahbthorpe@gmail.com>

Driveway

Greg Thorpe <ghthorpe@yahoo.com> Wed, Sep 7, 2016 at 12:52 PM
To: Leah Thorpe <leah_thorpe@ccpsnet.net>, Leah Thorpe <leahbthorpe@gmail.com>

Begin forwarded message:

From: Nick Woodard <nwoodard@finerhomesinc.net>
Date: September 7, 2016 at 12:30:34 PM EDT
To: Greg Thorpe <ghthorpe@yahoo.com>
Subject: RE: Driveway

The two options we discussed with Mr Kindervater at your home was to remove 3 slabs butting the garage and get 2% fall. 1 was getting that fall in a short distance and installing a drain at the bottom of the 2%fall. 2 was to create a swale through the 3 slabs moving water to the back. If you would like us to cut out the one slab with the low spot and re pour just that slab we can do this but we will draft a legal document stating the code is that the drive needs 2% fall from the garage and the repair you are requesting does not accomplish this. Finer homes nor Chesterfield county will be responsible after completion as you do not want us to perform the repair as we have suggested. All parties will need to sign.

From: Greg Thorpe [mailto:ghthorpe@yahoo.com]
Sent: Sunday, September 04, 2016 12:00 PM
To: Nick Woodard <nwoodard@finerhomesinc.net>
Cc: Greg Holt <gholt@finerhomesinc.net>
Subject: Driveway

Nick,

Gmail

Leah Thorpe <leahbthorpe@gmail.com>

YEAR END WARRANTY/CONTRACT ITEMS

5 messages

Leah Thorpe <leahbthorpe@gmail.com> Tue, Sep 6, 2016 at 10:11 PM
To: Nick Woodard <nwoodard@finerhomesinc.net>
Cc: gholt@finerhomesinc.net, "Kindervater, William" <kindervaterw@chesterfield.gov>, Greg Thorpe <ghthorpe@yahoo.com>
Bcc: Leah Thorpe <leahbthorpe@gmail.com>

NICK:

WE DROPPED OFF OUR YEAR END PUNCH LIST AT FINER HOMES OFFICE ON *6/30/16.* YOU REPLIED TO THE ITEMS ON THAT LIST ON *7/29/16* (IN RED BELOW). WE SENT YOU OUR REPLY ON *8/6/16* (IN BLUE BELOW). WE DID NOT GET A REPLY FROM YOU UNTIL *8/26/16* (IN GREEN BELOW) AND OUR REPLY TO YOUR E-MAIL ON 8/26/16 IS IN BROWN BELOW. HOPEFULLY THIS WILL BE THE LAST E-MAIL THAT WE WILL HAVE TO SEND. YOU ASKED SEVERAL TIMES IN YOUR LAST TWO E-MAILS TO PROVIDE YOU WITH TIMES TO SCHEDULE PEOPLE. *GREG IS OFF ON FRIDAYS.....THAT IS A GOOD TIME!* IF THEY CAN'T COME ON FRIDAY THEN JUST LET US KNOW WHEN THEY CAN COME.....WE WOULD LIKE TO GET THESE ITEMS RESOLVED ASAP. IT HAS TAKEN OVER TWO MONTHS TO GET THREE OF THE THIRTEEN ITEMS RESOLVED AND IN THE PROCESS OF GETTING THOSE THREE ITEMS DONE, THREE ADDITIONAL ITEMS HAVE BEEN CREATED (CUT FLOOR JOIST, HOLE IN SUB FLOOR, AND RIPS IN VINYL FLOOR IN MASTER BATH).

This email is being sent in response to your year-end punch list request, outlining Finer Homes response to each request. (7/29/16)

1. Provide gas heat hvac upstairs.

Harpers mill contract is to supply gas heat to the house, which has been done on the first floor. The house does not have to have gas heat to both floors and is very common practice to have gas heat on the first floor only.(7/29/16)

The Harpers Mill contract says that our home will have "energy efficient gas heat and hot water with central air conditioning" it does not specify that it is only on the first floor. The contract does specify that we will have 9' ceilings on the first floor, textured ceilings on the first floor but it does not specify gas heat only on

the first floor therefore Finer is legally obligated by the contract to provide gas heat for the entire house. What other builders do and what is commonly done makes no difference. *(8/6/16)*

1. We are not altering the the heating of the second floor. *(8/26/16)*

1. This is a contractual obligation. *(9/6/16)*

2. Repair trusses, padding up of bottom chord, hvac platform, and add support to left gable wall.

We have supplied engineer approved drawings for the current padding up of the trusses. No repair will be made to the padding. We will preform repairs to hvac platform per supplied drawings. We will also add support to left gable wall to enforce it

Finer Homes received a letter from the Chesterfield County Department of Building Inspection stating that the truss alterations violated the Virginia Statewide Building Code.

The engineer approved drawing for the padding up of the trusses that Finer Homes provided does not have the information on it that is required by the DPOR in the *REGULATIONS Governing Architects, Professional Engineers, Land Surveyors, Certified Interior Designers and Landscape Architects*. It is also against DPOR regulations for an engineer to a stamp a drawing unless the engineer and Finer Homes can prove the engineer has a working knowledge of the project for which the drawing was made. All of the truss drawings that were submitted to the county to obtain the building permit are stamped by Frank Lassiter. According to DPOR if the engineer that designed the trusses (Frank Lassiter) is available then he/she would be the proper person to do the repair drawing. Our expectation for this issue is for Finer Homes to provide repair drawings for the padding up of the trusses, and the bracing of the exterior wall prepared by and stamped by Frank Lassiter (as was done with the HVAC repair) and using those drawings have a Class A contractor make the repairs.

2. Greg is still working on the dispute of the padding of the trusses. We can certainly come make repairs to the gable wall and hvac platform if you have a day available for us to do wo.

2. Greg and I want to see the repair drawings stamped by Frank Lassister for each one of these repairs and we want to know what company is doing the repairs before any work is scheduled. Also, what do you mean the "dispute" about the padding of the trusses. The county sent Finer Homes a letter of defect listing the padding of the trusses as one of the defective items. I sent a picture of how Finer Homes padded up the trusses to the engineer that designed them and he said to tell Structural Technologies to issue a repair drawing. If he thought that the trusses would still perform as they were intended (which is what the building code requires) he would not have said to issue a repair drawing. The drawing that Finer Homes submitted to us was not a repair drawing.....it was a drawing of how the trusses were padded up.

3. Replace spigots with frost free spigots and install as shown with attached request picture.

Hose bibs will be switched out for frost free bibs, spigots will be mounted with standard mounting procedure to the side of the house.

Acceptable

3. Done

3. Plumbers said the swapped the spigots when they did the tub swap.

3. This item has been resolved.

4. Fix loose hardwood in kitchen and hall by garage.

We have replace the subfloor in these areas as suggested by rich dec. If there are still areas loose we will need to have rich dec inspect the areas.

The floors are loose in front of sink, refrigerator and hallway where there was a significant difference in the height of the old sub-floor and the new sub floor. We called and e-mailed Wendy when Thiago came to do the install. She should have all of the information and pictures.

4. Wendy at Rich Dec will be handling the hardwood squeaks. I left her a message again today to go ahead and schedule that with you.

4. As of September 6, 2016 we have not heard from Wendy.

5. Replace bathtub and install new kohler tub with setting compound.

New tub is being installed August 5th, any damaged tile repair will follow installation of new tub.

Acceptable

5. Tub has been replaced. We would like to have an engineer look at the notched joist as well as number 7 for proper repair. Please advise when this can be set up.

5. Please provide us with the name and company name of the engineer that will be inspecting the defects. As you well know, Friday is the most convenient day for appointments. We would also like stamped repair drawings from the engineer for these items.

6. Fix concrete in driveway next to garage door, slope away from garage.

Garlitz concrete has inspected the driveway and stated is is poured to code and no repair is warranted. We have had Apple Door install an upgraded weather stripping giving the garage door a better seal from the elements.

Refer to Letter of Defect sent to Finer Homes by The Chesterfield County Department of Building Inspection.

6. Will be meeting with county inspector and garlitz rep to inspect driveway. Just waiting to hear when we can set that up from the inspector.

6. Gregs e-mail to you regarding this is copied below:

Nick,

We see two options to repair the driveway:

1. Replace the single slab that is pooling and draining to the garage. This option would require careful planning and installation as to match elevations of neighboring slab pieces and still drain away from house. We realize it will not meet the 2%, but if it drains like the others, we will be fine with it.

2. Replace ALL slabs necessary to allow proper drainage off the driveway. This would include repairing any lawn and sprinkler damage. We feel the elevation change near property line would not be greatly affected since the water does not drain off driveway there anyway.

We did a hose test and every slab piece properly drains to the end pieces along property line (except slab piece in question) and runs towards the back. None of the water actually drains into grass along property line which is fine as long as water continuously flows toward back and then into grass.

Neither of these two options allow you to put a harsh or dramatic channel in the driveway.

7. Fix hole in garage block wall where hvac penetrates crawlspace.

Will need speeks to inspect for proper installation.

Refer to Letter of Defect sent to Finer Homes by The Chesterfield County Department of Building Inspection.

7. Would like to have engineer inspect for repair. Please advise when this can be set up.

7. Please provide us with the name and company name of the engineer that will be inspecting the defects. As you well know, Friday is the most convenient day for appointments. We would also like stamped repair drawings from the engineer for these items.

8. Repair chipped concrete on front sidewalk and crack in concrete in driveway.

Garlitz Concrete will patch the chipped section of concrete on the front sidewalk. While cracks and chips are not covered under any warranties we can also fill the crack in the driveway with a surface epoxy at the homeowners request.

Acceptable

8. Garlitz will address after inspection of driveway with inspector.

8. This was not addressed when Jeff Coates came and inspected the driveway for the third time.

9. Replace Freon line insulation. It is torn and the Freon line is sweating causing water to puddle in crawl.

Speeks will insulate all damaged areas on this line.

Acceptable

9. Speeks has been instructed to contact you for scheduling.

9. As of September 6th, Speeks has not contacted us.

10. Replace duct work from master bath vent fan, has a hole.

Crp will repair damaged vent line.

Refer to Letter of Defect sent to Finer Homes by The Chesterfield County Department of Building Inspection. The repair needs to be done by a Class A contractor (who is Crp?)

10. Crp has been instructed to contact you for scheduling.

10. This issue has been resolved.

11. Remove flooring on floors where sub floors have not been screwed down and screw down the subfloor, install new flooring.

We will pull up carpet and padding to screw the subfloor in all carpeted areas. Richmond decorating will re install the same padding and carpet after the subfloor has been screwed down. We will have people available to move furniture as needed.

If padding or carpet is damaged when it is pulled up we would expect it to be replaced. What about vinyl floors?

11. Lydia at Rich Dec will contact you to schedule the pulling of carpet and padding, she will let us know when that will happen and we will have be there to screw the subfloor as they pull the carpet and padding. They will then re install. We will have people available to help with moving furniture. We do not deem it necessary to remove vinyl floor coverings to screw the subfloors. We have discussed the master bath vinyl overspray issue and offered to lay new vinyl over the current. With the new damage from tub swap we will offer the same option. We can overlay that old vinyl with new vinyl in the master bathroom, or we can patch the damaged section next to the tub.

11. Acceptable for the carpet. Finer Homes said that they screw and glue all sub floors. This would include the vinyl floors. It is a contractual obligation.

12. Replace tree in front yard.

Will have to inspect tree for possible warranty coverage.

Acceptable

12. We are no longer using stockners for our landscaping needs, they are neglecting to warranty previous work. I will have our new contractor S&D services inspect the tree. Which tree are we looking at? It may be obvious when seen on sight but I want to make sure they know what they are looking for.

12. It is the tree on the left as you are looking at the house. When we moved in 14 months ago a large branch was broken and we were told it would be replaced.

13. Replace front door with wood composite door.

We will replace the front door slab for a wood composite door per the homeowners request

Where do we go to pick out the door slab?

13. The replacement door can be selected from N.B Goodwyns on jeff davis. Contact Shelby and she can probably send you what options are available. 804-228-4057

13. Our contract with Finer Homes say's that the exterior features include "insulated wood composite doors". It does not say door slabs and it includes all exterior doors. We will contact Shelby this week to determine if selections are acceptable.

14. This e-mail does not address the question of the discrepancy of the design loads on the contract plans and load limits on the trusses that were installed

14. We are not certain what your question on the discrepancy of trusses is. When constructing the house we go by the truss plans that come from the designer and install them accordingly.

14. On the house plans we received there is a box that says DESIGN LOADS. For the roof it says "30 PSF LIVE LOAD". If you look at the truss drawings, each truss only has a TCLL of 20.0 PSF. Why is there a discrepancy of 10 PSF? Also, in the DESIGN LOADS box on our house plans it says that the design load for all floors, attics, or limited storage is 40 PSF. According to the truss drawings the only two trusses that provide a 40 PSF BCLL are T-1X and T2 which are the finished rooms upstairs. Why don't we have 40 PSF BCLL in the attic/limited storage as is indicated on the house plans?

Please review and supply possible dates to have work preformed. Please allow 2-3 weeks for scheduling so we can get as many things scheduled on one day as possible to minimize the amount of time needed for repairs. (7/29/16)
As you know, Fridays and Saturdays are the best time for us to be available. We will not be available to have repairs done on August 13th, August 19th and August 20th. (8/6/16)

Nick Woodard

Customer Service Supervisor

804-920-1966

Finer Homes Inc. (8/26/16)

Nick Woodard <nwoodard@finerhomesinc.net> Wed, Sep 7, 2016 at 12:16 PM
To: Leah Thorpe <leahbthorpe@gmail.com>
Cc: "kindervaterw@chesterfield.gov" <kindervaterw@chesterfield.gov>, Greg Holt <gholt@finerhomesinc.net>

1. No repairs

2. Structural Technologies is the company that designs the trusses. Lassiter is just an engineer that stamps them. We have supplied an engineer stamped drawing for the padding as it currently is. I have spoken to Mr Kindervater on this issue as well, they did not have a copy of that stamped drawing when they sent their letter. He now has a copy of that stamped drawing, no repair will be made on the padding of the trusses. We have supplied a drawing for the hvac platform and I will have allen from structural technologies supply a drawing for how we can add support to the gable wall truss as requested as well.

3. Done

4. Wendy and Lydia at Rich Dec said Mr Thorpe refused to setup an appointment for the carpet or hardwood repairs as he was still disputing the vinyl. I will have Rich dec reach out again for scheduling repairs on hardwood squeaks, pulling carpet and padding to screw subfloor and re install, as well as pulling the vinyl sections to screw the subfloor and then replace.

5. Charley Tony with Pro Inspections. He can do this Friday morning between 830-9am.

6 The two options we discussed with Mr Kindervater at your home was to remove 3 slabs butting the garage and get 2% fall. 1 was getting that fall in a short distance and installing a drain at the bottom of the 2%fall. 2 was to create a swale through the 3 slabs moving water to the back. If you would like us to cut out the one slab with the low spot and re pour just that slab we can do this but we will draft a legal document stating the code is that the drive needs 2% fall from the garage and the repair you are requesting does not accomplish this. Finer homes nor Chesterfield county will be responsible after completion as you do not want us to perform the repair as we have suggested. All parties will need to sign.

7 Charley Tony with Pro Inspections. He can do this Friday morning between 830-9am.

8 All concrete repairs will be made at one time

9 Speeks can also come Friday morning to insulate damaged areas of line set.

10 Done

11 I will have Rich dec reach out again for scheduling repairs on hardwood squeaks, pulling carpet and padding to screw subfloor and re install, as well as pulling the vinyl sections to screw the subfloor and then replace.

12 Will look at this Friday.

13 The door as a whole is a wood composite door. The slab is the only thing that is not. We were willing to swap the slab for you to try and make you happy. I spoke with David Beck the owner over a goodwyns. They do not have any slabs that are a wood composite slab. No one uses them, wood composite is the material used for the interior doors. Years back someone came up with a Masonite material door like a wood composite that people used for a bit because they were cheap. Once they started falling apart they started running away from those doors. Technically the doors are considered insulated wood composite, we are not going to change the doors.

14 On the plans we draw, the 30 and 40 psf numbers are the standard loads for a stick built truss. Those

numbers are printed on every set of plans because on some models we do we have sections of roof that the trusses are stick built and those are the loads. A savannah does not have any stick built trusses. So those numbers are don't mean anything on your home, they are just standard print on our plans. The truss package supplied by structural technologies have they loads for the trusses that are being used. Both the truss package numbers and the standard print loads on our plans for stick built trusses are supplied for every homes plans, as other models different from the savannah have both stick built and engineered trusses being used.

Nick Woodard

Customer Service Supervisor

804-920-1966

Finer Homes Inc.

From: Leah Thorpe [mailto:leahbthorpe@gmail.com]
Sent: Tuesday, September 06, 2016 10:12 PM
To: Nick Woodard <nwoodard@finerhomesinc.net>
Cc: Greg Holt <gholt@finerhomesinc.net>; Kindervater, William <kindervaterw@chesterfield.gov>; Greg Thorpe <ghthorpe@yahoo.com>
Subject: YEAR END WARRANTY/CONTRACT ITEMS

[Quoted text hidden]

[Quoted text hidden]

[Quoted text hidden]

Leah Thorpe <leahbthorpe@gmail.com> Wed, Sep 7, 2016 at 1:34 PM
To: leah_thorpe@ccpsnet.net

[Quoted text hidden]

Leah Thorpe <leahbthorpe@gmail.com> Wed, Sep 7, 2016 at 1:35 PM
To: Greg Thorpe <ghthorpe@yahoo.com>

——— Forwarded message ———
From: "Nick Woodard" <nwoodard@finerhomesinc.net>
Date: Sep 7, 2016 12:16 PM
Subject: RE: YEAR END WARRANTY/CONTRACT ITEMS
To: "Leah Thorpe" <leahbthorpe@gmail.com>
Cc: "kindervaterw@chesterfield.gov" <kindervaterw@chesterfield.gov>, "Greg Holt" <gholt@finerhomesinc.net>

[Quoted text hidden]

Leah Thorpe <leahbthorpe@gmail.com> Wed, Sep 7, 2016 at 8:15 PM
To: Nick Woodard <nwoodard@finerhomesinc.net>
Cc: gholt@finerhomesinc.net, "Kindervater, William" <kindervaterw@chesterfield.gov>, Greg Thorpe <ghthorpe@yahoo.com>
Bcc: Leah Thorpe <leahbthorpe@gmail.com>

Nick:

Friday at 8:30 is fine for Mr. Toney from Pro Inspections to come look at the cut floor joist and the hole in the block wall in the garage where the HVAC penetrates the crawl space. It is also fine for Speeks to come and replace the freon line insulation.

1. Not acceptable.

2. Not acceptable for the padding up of the trusses. The drawing for the padding up of the trusses that was provided is not valid and Mr. Kindervater had seen it before he wrote the letter.

We will have to see the repair drawing for the gable wall before we sign off on it.

4.. Lydia called Greg and he did not refuse to schedule. He said that he wanted to get it all done at the same time and you had still not agreed to pull up the vinyl and screw down the sub floor and replace the vinyl. We were waiting to resolve that conflict so that they would not have to come here twice. Wendy never called Greg.

5. Acceptable

6. Not acceptable. We feel that we should not have to accept anything less than what we would have had if it had been done correctly in the first place. We should not have to settle because the driveway was not poured to code and the building inspector missed it.

7. Acceptable

8. Acceptable

9. Acceptable

11. Acceptable

12. Acceptable

13. Not acceptable. Does not make sense to list it as an exterior "feature" of a home built in Harpers Mill if

wood composite is only used as an interior door.

14. Not acceptable. The house plans were part of the legal contract. It makes no sense at all that random specifications can be listed that don't apply.

We will see you Friday.

Greg and Leah Thorpe
[Quoted text hidden]

Gmail Leah Thorpe <leahbthorpe@gmail.com>

Question

3 messages

Leah Thorpe <leahbthorpe@gmail.com> Mon, Feb 13, 2017 at 12:09 PM
To: dewdrinkers@verizon.net

Mr. Eudailey:

I was wondering if you would be able to answer a question about our LBBCA hearing on November 30, 2016. One of the items we were appealing was the padding up of the bottom chord of six of our roof trusses. You voted that the Building Officials decision should not be upheld and you made a comment that you had a problem with the method of construction from a firefighters stand point. Could you tell me why you had a problem with it?

I strongly feel that the method of construction is against code and the burden of proving it lies with us finding the correct code or codes that it violates. That just doesn't seem right. We have had several other issues since that hearing, the biggest one being that our HVAC system is a mess. We found gaps in the return duct every two to three feet the day after the supervisor for mechanical inspections had been under our house checking it. He told us everything looked fine.

We have our state appeal this Friday and I would really appreciate if you could tell me what your concern was.

Thank you,
Leah Thorpe

---

dewdrinkers@verizon.net <dewdrinkers@verizon.net> Tue, Feb 14, 2017 at 10:00 AM
To: Leah Thorpe <leahbthorpe@gmail.com>

Mrs Thorpe - I can not quote you a chapter and verse of a code book but from a public safety standpoint the method of repair caused me concern. If the rafters were exposed to fire it is my belief the attachment points would be an area of potential failure. Hope you realize some success this week.

Sent from my iPhone
[Quoted text hidden]

Leah Thorpe <leahbthorpe@gmail.com> Tue, Feb 14, 2017 at 11:32 AM
To: Greg Thorpe <ghthorpe@yahoo.com>

[Quoted text hidden]

Hodge, Vernon (DHCD) <Vernon.Hodge@dhcd.virginia.gov> Mon, Jul 11, 2016 at 1:24 PM

To: Leah Thorpe <leahbthorpe@gmail.com>
Cc: "Davis, Cindy (DHCD)" <Cindy.Davis@dhcd.virginia.gov>, "Maenner, Michael (DHCD)" <Michael.Maenner@dhcd.virginia.gov>, "Negley, Valrae (DHCD)" <Valrae.Negley@dhcd.virginia.gov>

Mrs. Thorpe,

The Virginia building code does not have prescriptive provisions addressing the actual way that the construction in question was done, so determining compliance would have to be by analysis of loads and stresses. The code just has a performance statement when the actual method of construction is not addressed and the performance expectation set out would be that the method of construction would withstand all superimposed loads.

The engineers may have included an overloaded condition in their calculations or erred on the safe side. I personally do not know how to do the stress calculations necessary to determine whether the method of construction used will withstand all superimposed loads. From what you have indicated, the local inspector/supervisor is making an informed judgment based on experience that the method of construction will withstand all superimposed loads. They have the authority to do that. If you disagree, you have a right to file an appeal of that decision. Appeals of decisions made by local inspectors are made to a local appeals board made up of individuals from the community who are knowledgeable in construction. That is your method of getting this resolved if you believe the local inspector/supervisor has erred in determining that the construction complies with the code.

Vernon Hodge, CBO, Technical & Code Development Specialist

State Building Codes Office

Division of Building and Fire Regulation

Va. Department of Housing and Community Development

Direct Dial: (804) 371-7174

Email: Vernon.Hodge@DHCD.virginia.gov

From: Leah Thorpe [mailto:leahbthorpe@gmail.com]
Sent: Monday, July 11, 2016 12:32 PM
To: Hodge, Vernon (DHCD)
Cc: Davis, Cindy (DHCD); Maenner, Michael (DHCD); Negley, Valrae (DHCD)
Subject: Re: Code question

[Quoted text hidden]

Leah Thorpe <leahbthorpe@gmail.com> Mon, Jul 11, 2016 at 2:21 PM
To: "Hodge, Vernon (DHCD)" <Vernon.Hodge@dhcd.virginia.gov>

Gmail

Leah Thorpe <leahbthorpe@gmail.com>

Fwd: Gable truss

1 message

Greg Thorpe <ghthorpe@yahoo.com> Mon, Sep 19, 2016 at 11:02 AM
To: Leah Thorpe <leah_thorpe@ccpsnet.net>, Leah Thorpe <leahbthorpe@gmail.com>

Begin forwarded message:

From: Nick Woodard <nwoodard@finerhomesinc.net>
Date: September 19, 2016 at 11:00:10 AM EDT
To: Greg Thorpe <ghthorpe@yahoo.com>
Subject: Gable truss

I spoke with Allen at structural tech. They can't do a repair drawing adding bracing to the gable truss because the bracing is added by the framers and not per a bracing design.

I will have me tony give me a repair for this. He would have to see the truss before he could do his repair. He said he could see it in person or from pictures. If you can send me some pictures of that gable truss I will have him add that to his report with the cut joist and block wall and hopefully we can get our hands on that this week and be able to knock those items out Friday as well.

Nick Woodard
Customer Service Supervisor
804-920-1966

Gmail

Leah Thorpe <leahbthorpe@gmail.com>

Fwd: 10 Harpersmill Mill 16300 Longland road Framing Review Finer Homes.pdf

Greg Thorpe <ghthorpe@yahoo.com>
To: Leah Thorpe <leahbthorpe@gmail.com>

Wed, Sep 21, 2016 at 10:18 PM

Begin forwarded message:

From: Nick Woodard <nwoodard@finerhomesinc.net>
Date: September 21, 2016 at 6:27:55 PM EDT
To: Greg Thorpe <ghthorpe@yahoo.com>
Subject: **10 Harpersmill Mill 16300 Longland road Framing Review Finer Homes.pdf**

Rich dec will be there Friday between 1230-2 to replace vinyl in master bathroom.

I spoke to Michael and he cannot come this Friday to look at hardwood squeaks. He said he could do one day next week.

I will have mr tony come Friday afternoon to look at the gable truss as well. He said he could do after noon, just waiting to hear what time he can make it.

Attached is the repairs for the joist and block wall. I will need to come Friday to measure for the fabrication o the angle iron for the block wall repair. I can also take care of the repairs on the joist, Hvac platform and hole in the subfloor from tub swap as well Friday. I will be doing those repairs.

Nick Woodard
Customer Service Supervisor
804-920-1966
Finer Homes Inc.

10 Harpersmill Mill 16300 Longland road Framing Review Finer Homes.pdf
1152K

Pro-Inspections, Inc.

P.O. Box 1316 Powhatan Va. 23139 Office 804-814-8084

September 19, 2016

Finer Homes
Po box 9190
Chesterfield Va 23832

RE: Framing Review
10 Harper Mill
16300 Longland rd.

Per your request, we made a review of the over notched I joist in crawl at the above construction site.
The following is an outline of our findings.
Framing:

- The floor system in the foundation is 9.5 LPI20 I joists @ 19.2oc
- The load at the bath room is 286lb and 1301 to 1505ft.lb that bear directly on a single span i-joist
- The HVAC with two ductwork open up 48"of block in the foundation wall.
  Design Requirement:
- The I-jiost shall be reinforced with 2x4 x96" stud grade with 1 ½" upright connected with sub floor adhesive and 12D @ 6"oc
- The foundation wall at the HVAC ductwork shall be placing 2- L3.5x3.5x.475 under the sill plate.

Should you have any questions please feel free to contact us.

Sincerely,

Charles Toney, P.E.

9/19/2016

Project:

Location: Multi-Span Floor Beam 4
Multi-Span Floor Beam
[2009 International Building Code(AISC 13th Ed ASD)]
A36 L3-1/2x3-1/2x7/16 x 4.0 FT Leg Up
Section Adequate By: 0.8%
Controlling Factor: Shear

hannah13
Pro Inspections Inc.
2517 Anderson Highway
Powhatan, Va

StruCalc Version 8.0.113.0 9/19/2016 3:57:43 PM

DEFLECTIONS	Center	
Live Load	0.09	IN L/525
Horizontal Component	0.06	
Dead Load	0.02	in
Horizontal Component	0.01	in
Total Load	0.12	IN L/416
Horizontal Component	0.07	

Live Load Deflection Criteria: L/360 Total Load Deflection Criteria: L/240

REACTIONS	A	B
Live Load	1920 lb	1920 lb
Dead Load	500 lb	500 lb
Total Load	2420 lb	2420 lb
Bearing Length	0.81 in	0.81 in

BEAM DATA	Center
Span Length	4 ft
Unbraced Length-Top	0 ft
Unbraced Length-Bottom	4 ft

LOADING DIAGRAM

FLOOR LOADING		Center	
Floor Live Load	FLL =	40	psf
Floor Dead Load	FDL =	10	psf
Floor Tributary Width Side One	TW1 =	16	ft
Floor Tributary Width Side Two	TW2 =	8	ft
Wall Load	WALL =	0	plf

BEAM LOADING	Center	
Reduced Floor Live Load	40	psf
Total Live Load	960	plf
Total Dead Load	240	plf
Beam Self Weight	10	plf
Total Load	1210	plf

STEEL ANGLE PROPERTIES
L3-1/2x3-1/2x7/16 - A36

Properties:

Yield Stress	Fy =	36	ksi
Modulus of Elasticity:	E =	29000	ksi
Depth (Leg Length):	d =	3.5	in
Leg Thickness:	tw =	0.44	in
Distance to Angle Toe of Fillet:	k =	0.81	in
Moment of Inertia About X-X Axis:	Ix =	3.25	in4
Section Modulus About X-X Axis:	Sx =	1.32	in3

Design Properties per 13th Edition AISC Steel Manual:

Angle Tip is in Compression			
Flange Buckling Ratio:	FBR =	8	
Allowable Flange Buckling Ratio for Compact	AFBR =	15.33	
Allowable Flange Buckling Ratio for Non-Compact	AFBR_NC =	25.83	
Nominal Flexural Strength w/ Safety Factor	Mn =	2845.51	ft-lb
Controlling Equation:	F10-1		
Controlling Cv Factor:	Cv =	1	
Nominal Shear Strength w/ Safety Factor:	Vn =	19805	lb

Controlling Moment: 2420 ft-lb
2.0 Ft from left support of span 2 (Center Span)
Created by combining all dead loads and live loads on span(s) 2
Controlling Flexural Shear: 2420 lb
Controlling Torsional Shear (C-G4-2): 17236 lb
Controlling Shear: 19656 lb
At left support of span 2 (Center Span)
Created by combining all dead loads and live loads on span(s

Comparisons with required sections:	Req'd	Provided
Moment of Inertia (deflection):	2.23 in4	3.25 in4
Moment	2420 ft-lb	2846 ft-lb
Shear	19656 lb	19805 lb

Gmail

Leah Thorpe <leahbthorpe@gmail.com>

Fwd: 10 Harpersmill Mill 16300 Longland road Framing Review Finer Homes.pdf

Greg Thorpe <ghthorpe@yahoo.com> Wed, Sep 21, 2016 at 11:34 PM
To: Nick Woodard <nwoodard@finerhomesinc.net>
Cc: Leah Thorpe <leahbthorpe@gmail.com>

I am fine with rich dec coming out this Friday to replace master bath floor and Mr Tony looking at gable truss.

We are not however, comfortable with you doing structural repairs on our house. We don't see where you are licensed with DPOR. We are not talking about a cosmetic issue here. We are talking about the structural integrity of our home.

For the county to come reinspect these items when done, isn't a permit required?

How much is the angled iron supposed to be overlapped across sill plate?

Where on the floor joist is the 2x4x96 to be placed?

Who's pulling/ reinstalling the toilet?

I am very anxious to get these repairs made, but I want to make sure they are being done correctly. The cutting of the floor joist in the hopes that no one would notice was very unethical.

See everyone Friday,

Greg Thorpe

Gmail

Leah Thorpe <leahbthorpe@gmail.com>

Fwd: 10 Harpersmill Mill 16300 Longland road Framing Review Finer Homes.pdf

Greg Thorpe <ghthorpe@yahoo.com> Fri, Sep 23, 2016 at 10:42 AM
To: Leah Thorpe <leah_thorpe@ccpsnet.net>, Leah Thorpe <leahbthorpe@gmail.com>

Begin forwarded message:

From: Nick Woodard <nwoodard@finerhomesinc.net>
Date: September 23, 2016 at 10:36:20 AM EDT
To: Greg Thorpe <ghthorpe@yahoo.com>
Subject: RE: 10 Harpersmill Mill 16300 Longland road Framing Review Finer Homes.pdf

Rich dec will be there today between 12-3 to pull up and replace the vinyl in the master bathroom. They will be pulling and re installing the toilet.

These repairs are being done by Finer Homes, licensed and insured class A contractor. As a finer homes employee I work under their license and insurance to do all repairs. If you want to hire someone else to do the work then that's fine. Send me the bill.

If the county wants us to permit repair work then we will do so. I do not believe we need to permit repair work for them to come look at it after. That has never been the case.

There will be two 3.5" pieces of angle iron, one on each side of the sill plate which is 7.5" wide. There will be a .5" gap in the center of the two pieces of iron.

The 2x4 for the joist will be centered on the notch. 4' on either side of that notch.

I spoke to Mr. Tony earlier in the week and he said he was available to come today after noon to look at the gable truss. I have not heard back from him about what time yet. I left him another message this morning. I will be there between 12-2 to measure for the fabrication of the angle iron. I will not be doing any other repairs at this point today.

Gmail

Leah Thorpe <leahbthorpe@gmail.com>

HOLE IN FOUNDATION BEARING WALL

Leah Thorpe <leahbthorpe@gmail.com> Sun, Oct 16, 2016 at 10:31 PM
To: Nick Woodard <nwoodard@finerhomesinc.net>
Cc: gholt@finerhomesinc.net, "Kindervater, William" <kindervaterw@chesterfield.gov>, wittr@chesterfield.gov, DuplerB@chesterfield.gov

Hi Nick:

Just wanted to give you a heads up that Mr. Toney may need to re-work his calculations on the fix for the hole in the foundation where the HVAC was installed. On his repair he reports that the opening in the foundation is 48". Greg measured it this weekend and it is 58". That is very close to 1/4 of that load bearing wall having no support. I have attached the repair calculations from Mr. Toney and a picture of the hole in the foundation.

Leah Thorpe

PRO INSPECTIONS REPAIR.pdf
1182K

Gmail

Leah Thorpe <leahbthorpe@gmail.com>

Re block wall

Nick Woodard <nwoodard@finerhomesinc.net> Mon, Oct 17, 2016 at 4:29 PM
To: "leahbthorpe@gmail.com" <leahbthorpe@gmail.com>

I will send the info on the block wall to me Tony and see if he needs to revise. Attached is all 3 repairs as it is now.

2 attachments

16300 Longland Road Lot 10 Harper Mill Finer Homes Framing Review .pdf
828K

ATT00001.htm
1K

Pro-Inspections, Inc.

P.O. Box 1316 Powhatan Va. 23139 Office 804-814-8084

Reviewed date October 10, 2016

Finer Homes
Po box 9190
Chesterfield Va 23832

RE: Framing Review
10 Harper Mill
16300 Longland rd.

Per your request, we made a review of the over notched I joist in crawl at the above construction site.
The following is an outline of our findings.
Framing:

- The floor system in the foundation is 9.5 LPI20 I joists @ 19.2oc
- The load at the bath room is 286lb and 1301 to 1505ft.lb that bear directly on a single span i-joist
- The HVAC with two ductwork open up 48"of block in the foundation wall.
  Design Requirement:
- The I-jiost shall be reinforced with 2x4 x96" stud grade with 1 ½" upright connected with sub floor adhesive and 12D @ 6"oc a secondary Ijiost shall be added to this area adjacent to the over notched joist
- The foundation wall at the HVAC ductwork shall be placing L6x6x3/8 under the sill plate.
- Truss window shall be reinforced with a secondary stiff back placed 8'-0" from floor and shall be connected to each stud in the truss with 2-16d nails .

.
Should you have any questions please feel free to contact us.

Sincerely,

Charles Toney, P.E.

COMMONWEALTH OF VIRGINIA
CHARLES A. TONEY
32757
PROFESSIONAL ENGINEER

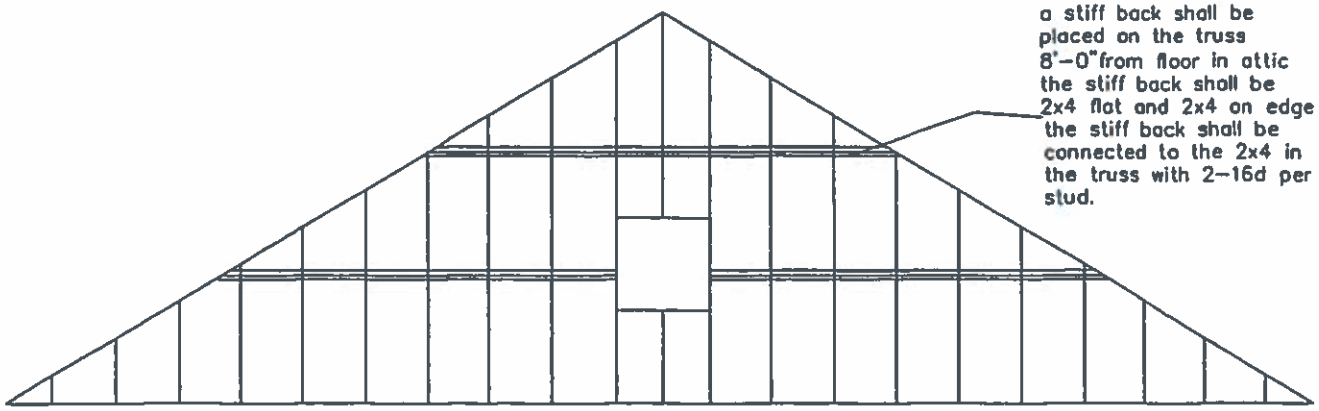

COMMONWEALTH OF VIRGINIA
CHARLES ALLEN TOREY
No. 32751
PROFESSIONAL ENGINEER
10/10/16

Pro.Inspections Inc.
2517 Anderson Hwy. Suite 2
PO Box 1318
Powhatan, va. 23139

gable
Harpers Mill lot 10
Finer

A-1

Pro-Inspections, Inc.

P.O. Box 1316 Powhatan Va. 23139 Office 804-814-8084

Second Reviewed date November 4, 2016

Finer Homes
Po box 9190
Chesterfield Va 23832

RE: Framing Review
10 Harper Mill
16300 Longland rd.

Per your request, we made a review of the over notched I joist in crawl at the above construction site.
The following is an outline of our findings.
Framing:

- The floor system in the foundation is 9.5 LPI20 I joists @ 19.2oc
- The load at the bath room is 286lb and 1301 to 1505ft.lb that bear directly on a single span i-joist
- The HVAC with two ductwork open up 60"of block in the foundation wall.
  Design Requirement:
- The I-jiost shall be reinforced with 2x4 x96" stud grade with 1 ½" upright connected with sub floor adhesive and 12D @ 6"oc a secondary Ijiost shall be added to this area adjacent to the over notched joist
- The foundation wall at the HVAC ductwork shall be placing L6x6x5/8under the sill plate.
- Truss window shall be reinforced with a secondary stiff back placed 8'-0" from floor and shall be connected to each stud in the truss with 2-16d nails .

Should you have any questions please feel free to contact us.

Sincerely,

Charles Toney, P.E.

COMMONWEALTH OF VIRGINIA
CHARLES A. TONEY
32757
PROFESSIONAL ENGINEER

Gmail

Leah Thorpe <leahbthorpe@gmail.com>

Tile man was a No-Show

Greg Thorpe <ghthorpe@yahoo.com> Tue, Mar 14, 2017 at 7:29 AM
To: Nick Woodard <nwoodard@finerhomesinc.net>
Cc: Greg Holt <gholt@finerhomesinc.net>, Leah Thorpe <leahbthorpe@gmail.com>

Nick-

Waited around yesterday since I didn't get an email or call saying otherwise. What's the plan now?

Greg Thorpe

Gmail

Leah Thorpe <leahbthorpe@gmail.com>

Tile man was a No-Show

Greg Thorpe <ghthorpe@yahoo.com> Tue, Mar 14, 2017 at 8:45 AM
To: Leah Thorpe <leahbthorpe@gmail.com>, Leah Thorpe <leah_thorpe@ccpsnet.net>

Begin forwarded message:

From: Nick Woodard <nwoodard@finerhomesinc.net>
Date: March 14, 2017 at 8:06:50 AM EDT
To: Greg Thorpe <ghthorpe@yahoo.com>
Subject: Re: Tile man was a No-Show

Tommy must have gotten tied up yesterday afternoon. He asked for you number yesterday so he could give you a shout when he was on his way. I just left him a message to reach out and reschedule.

Nick Woodard
Customer Service Supervisor
804-920-1966
Finer Homes Inc.
[Quoted text hidden]

Gmail

Leah Thorpe <leahbthorpe@gmail.com>

Tile man was a No-Show

Greg Thorpe <ghthorpe@yahoo.com> Tue, Mar 14, 2017 at 10:16 AM
To: Nick Woodard <nwoodard@finerhomesinc.net>
Cc: Leah Thorpe <leahbthorpe@gmail.com>, Leah Thorpe <leah_thorpe@ccpsnet.net>

Yes, that is the correct number. I got his morning message. I was in a meeting. He did not call my phone last night. I emailed you last night at 5:32 asking about him. I am looking at our schedule again and will call him back.

Greg

On Mar 14, 2017, at 9:32 AM, Nick Woodard <nwoodard@finerhomesinc.net> wrote:

> I just spoke to tommy. He said he left a message yesterday and this morning. Is (804) 513-9245 still an active number?
>
> Nick Woodard
> Customer Service Supervisor
> 804-920-1966
> Finer Homes Inc.
>
> On Mar 14, 2017, at 7:29 AM, Greg Thorpe <ghthorpe@yahoo.com> wrote:
>
> [Quoted text hidden]

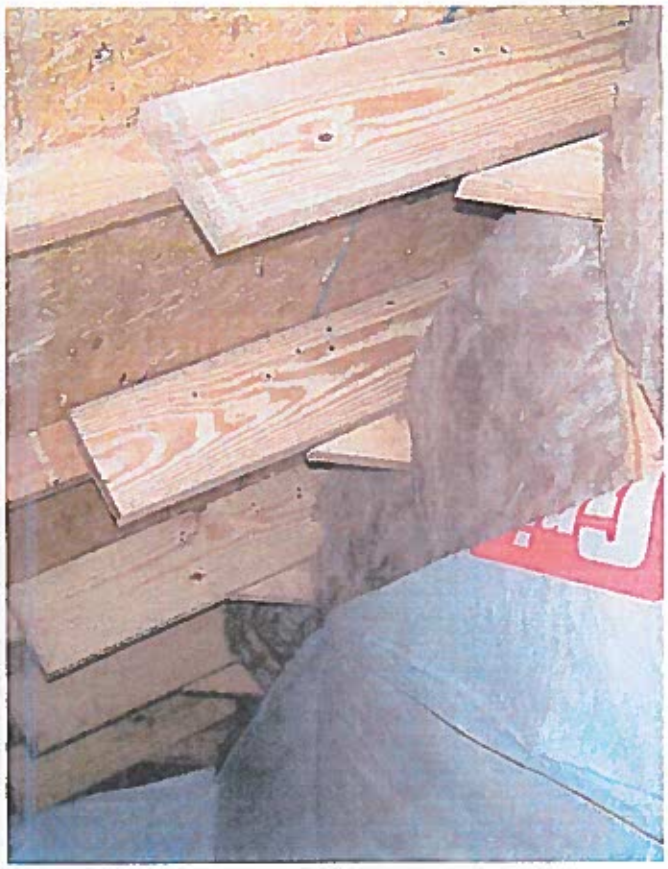

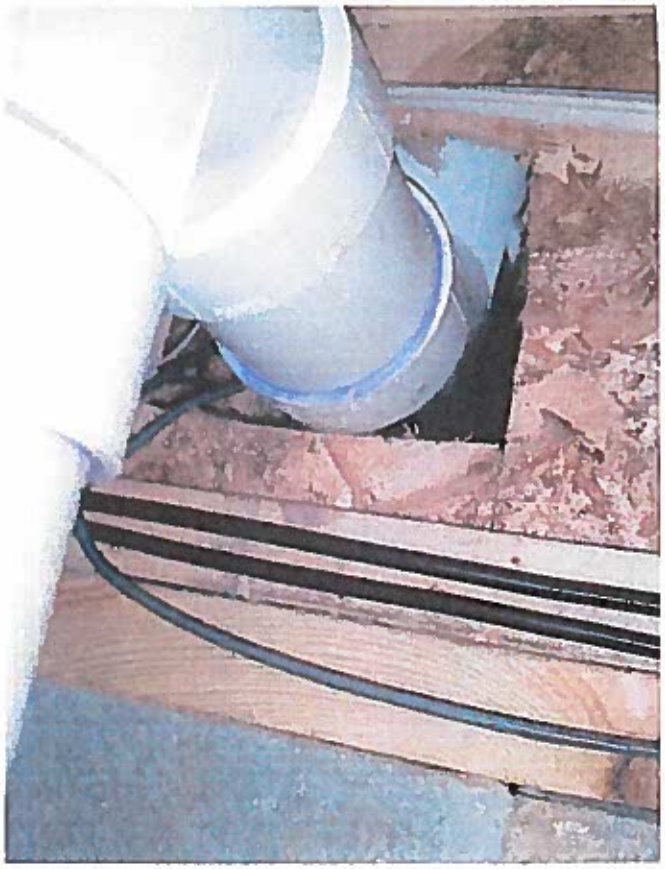

Additional Documents
Submitted by Chesterfield County

Chesterfield County, Virginia
Department of Building Inspection
9800 Government Center Parkway – P.O. Box 40 – Chesterfield, VA 23832
Phone: (804) 748-1057 – Fax: (804) 751-2249 – Internet: chesterfield.gov

Richard C. Witt
Building Official

30 March 2017

Appeal No. 16-11
Chesterfield County questions regarding issues for resolution numbers 1 and 4:

Suggested issue for resolution #1
DRIVEWAY DRAINAGE:

Chesterfield County questions whether this issue is proper before the board.

In the Thorpe's statement of relief sought they request the "State's interpretation of this code as we feel that the County is wrong when they say 'the builder can do whatever he/she wants beyond 10 feet from the building.'"

At issue is the following statement made by Mr. Witt in an email to the Thorpes: "The use of a swale beyond 10 feet from the building may be used to divert the drainage towards the street and storm water collection system for the sub-division."

Mr. Witt's statement was effectively a code interpretation that could have been applied but was not applied. The driveway drainage issue was corrected by Finer Homes without installation of a swale. There is no swale in the Thorpe's driveway and there is not a permit issued to install a swale. What the Thorpe's are requesting is not relief from a decision of the building official that has impacted the building but the "State's interpretation of this code." Can a citizen use the appeal process to request a building code interpretation from the TRB? Since there is neither a swale that could be removed nor pending installation a swale that has been approved, which could be reversed, what relief can the TRB provide concerning this issue? If Mr. Witt's decision was overturned what would be the result?

Suggested issue for resolution #4
COMPLIANCE TIMES

Chesterfield County questions whether this issue is proper before the board.

The August 3, 2016 letter of defect stipulated 30 days, which ended on September 2, 2016. The September 16, 2016 letter of defect and notice of violation both stipulated 60 days, which ended on November 15, 2016. The LOD and NOV time frames have passed so the issue of timeframes is legally moot at this point and just a theoretical argument. Since the compliance times have passed what relief can the TRB provide concerning this issue? If Mr. Witt's decision was overturned what would be the result?

The Thorpe's are not requesting the extension or reduction in the compliance times stipulated. In the Thorpe's statement of relief sought they request (in general) for the "State to rule as to whether or not the building official has the flexibility to set compliance times." At this point, what the Thorpe's are requesting is a code interpretation, not relief that can be applied. The Thorpe's further elaborate on page 843 in the "Thorpe's Position on Appeal Items" document in the February 17, 2017 TRB meeting package that they are appealing the compliance time issue because "if the county was mandated to adhere to specific compliance times, other home owners will not have to go through what we did." They further elaborate by stating: "It seems obvious to us that mandated procedures should be implemented to eliminate any suggestion of conflict of interest." The Thorpe's appeal of compliance times is to achieve an interpretation to protect other homeowners not party to this appeal case and mandate procedures for the department to follow.

Can the TRB rule on behalf of a future homeowner not party to this appeal and mandate future compliance times to be used on future homeowners? Can the TRB establish departmental procedures?

Chesterfield County, Virginia
Department of Building Inspection
9800 Government Center Parkway – P.O. Box 40 – Chesterfield, VA 23832
Phone: (804) 748-1057 – Fax: (804) 751-2249 – Internet: chesterfield.gov

Richard C. Witt
Building Official

30 March 2017

Appeal No. 16-11
Chesterfield County additional information regarding issues for resolution numbers 1 and 4:

Suggested issue for resolution #1
DRIVEWAY DRAINAGE:

Attached is TRB appeal number 09-3 Keystone (pages A1-A5) and the associated code change from Keystone that resulted from the TRB ruling (page B), which put the words "to the dwelling unit" into section R401.3.

The TRB ruled in case 09-3 that drainage issues on a lot that cannot be shown to be detrimental to the foundation of the building are not violations of R401.3 and outside of the scope of the USBC. The intent of this ruling was codified in the associated code change to the 2009 USBC. If we were to cite a swale in the driveway as a violation of R401.3, per the TRB ruling and the intent of the 2009 USBC code change we would need to demonstrate that the swale created a detrimental effect on the building foundation. There is no way we could establish that placing a swale 10 feet away from the house sloped downhill from the house creates a detrimental effect on the building foundation.

Suggested issue for resolution #4
COMPLIANCE TIMES

Attached is 2012 USBC section 115.2 (page C) and 1993 USBC section 112.2 (page D).

The Chesterfield verses Karnes case (note "Karnos" is a misspelling) ruling was based on the 1993 USBC version of the Notice of Violation section 112.2, which was written such that it was interpreted by the court that issuance of an NOV is mandatory whenever a violation of the code was determined. The USBC was subsequently amended to correct that error in text. The current USBC Notice of violation section 115.2 and all editions of the USBC from 1996 to present have the provision that the NOV shall be issued if the violations have not been corrected in a "reasonable" time.

A 1

VIRGINIA:

BEFORE THE
STATE BUILDING CODE TECHNICAL REVIEW BOARD

IN RE: Appeal of Keystone-RM, LLC (Keystone Builders)
Appeal No. 09-3

Hearing Date: September 18, 2009

DECISION OF THE REVIEW BOARD

I. PROCEDURAL BACKGROUND

The State Building Code Technical Review Board ("Review Board") is a Governor-appointed board established to rule on disputes arising from application of the Virginia Uniform Statewide Building Code ("USBC") and other regulations of the Department of Housing and Community Development. See §§ 36-108 and 36-114 of the Code of Virginia. Enforcement of the USBC in other than state-owned buildings is by local city, county or town building departments. See § 36-105 of the Code of Virginia. An appeal under the USBC is first heard by a local board of building code appeals and then may be further appealed to the Review Board. See § 36-105 of the Code of Virginia. The Review Board's proceedings are governed by the Virginia Administrative Process Act. See § 36-114 of the Code of Virginia.

II. CASE HISTORY

Keystone-RM, LLC ("Keystone"), a homebuilding company, appeals a decision of the Chesterfield County USBC department (the "building official") concerning the drainage on the lot of a home built by Keystone and located at 10412 Beachcrest Place.

The home was completed in 2007. In early to mid-2008 the purchasers of the home complained to the building official about standing water on the property.

After attempts to resolve the situation with Keystone, the building official issued a USBC notice of violation for non-compliance with the International Residential Code (the "IRC"), a nationally recognized model code for home construction incorporated by reference in the USBC.

Keystone appealed the notice of violation to the Chesterfield County Board of Building Code Appeals ("County USBC board"), which heard the appeal and ruled to uphold the issuance of the notice of violation.

Keystone then further appealed to the Review Board.

III. FINDINGS OF THE REVIEW BOARD

The issue in the appeal is whether the drainage problems associated with the lot constitute a USBC violation or whether

drainage problems on a lot are outside of the purview of the USBC.

The building official relies on the wording in the first sentence of § R401.3 of the IRC[1] which states that "[s]urface drainage shall be diverted to a storm sewer conveyance or other approved point of collection so as to not create a hazard."

Keystone argues that § 401.3 of the IRC is part of the overall section of the IRC regulating foundation construction, and therefore, unless the drainage problem can be shown to affect the foundation of the house, no violation is present.

No evidence was submitted to indicate that the drainage problems had any adverse effect on the foundation of the home as the standing water was well away from the home.

The Review Board finds that the purpose of both the USBC, in § 102.1, and the use of the IRC as part of the USBC, is to regulate the construction of buildings and structures. Therefore, for the language in § R401.3 of the IRC to be applicable under the USBC, it must be shown that the hazard created by the lack of diverting the surface water is detrimental to the foundation of the home. This was not shown.

Further, § R401.1 of the IRC addresses the application of the entire section (R401), of which § R401.3 is a part, and the

[1] The 2003 edition of the IRC was effective when the house was constructed; however, the wording in both the 2003 edition and the current (2006) edition is the same.

entire chapter (Chapter 4, Foundations) of the IRC, and states that "[t]he provisions of this chapter shall control the design and construction of the foundation and foundation spaces for all buildings."

In addition, to the extent that it may be argued that the language in the IRC could be read to apply to areas of the lot which cannot be shown to affect a building, § 101.6 of the USBC states that the administrative provisions of the USBC, which would include the purpose statement in § 102.1, supersede any conflicting provisions of the codes and standards referenced.

IV. FINAL ORDER

The appeal having been given due regard, and for the reasons set out herein, the Review Board orders the decisions of the building official and the County USBC board that a USBC violation exists relative to the drainage on the lot in question to be, and hereby are, overturned.

Chairman, State Technical Review Board

11/20/2009
Date Entered

As provided by Rule 2A:2 of the Supreme Court of Virginia, you have thirty (30) days from the date of service (the date you actually received this decision or the date it was mailed to you, whichever occurred first) within which to appeal this decision by filing a Notice of Appeal with Vernon W. Hodge, Secretary of the Review Board. In the event that this decision is served on you by mail, three (3) days are added to that period.

B

VIRGINIA DEPARTMENT OF HOUSING AND COMMUNITY DEVELOPMENT
CODE CHANGE FORM

Address to submit to:	Document No. _____
DHCD, The Jackson Center 501 North Second Street Richmond, VA 23219-1321	Committee Action: _____ BHCD Action: _____
Tel. No. (804) 371 – 7150 Fax No. (804) 371 – 7092 Email: bhcd@dhcd.virginia.gov	

Submitted by: Douglas S. Jones Representing: Keystone – RM, LLC

Address: 1207 Roseneath Road #200 Phone No. **804-921-2445 (revised)**

Regulation Title: 2006 International Residential Code
Section No(s): Chapter 4 Foundations, Section R401 General, R401.3 Drainage

Date: February 27, 2009 **(Revision #4 12/02/09)**

Proposed Change:

R401.3 Drainage. Surface drainage shall be diverted to a storm sewer conveyance or other approved point of collection so as to not create a hazard to the dwelling unit. Lots shall be graded to drain surface water away from foundation walls. The grade shall fall a minimum of 6 inches (152 mm) within the first 10 feet (3048 mm).

Exception: Where lot lines, walls, slopes or other physical barriers prohibit 6 inches (152 mm) of fall within 10 feet (3048 mm), the final grade shall slope away from the foundation at a minimum slope of 5 percent and the water shall be directed to drains or swales to ensure drainage away from the structure. Swales shall be sloped a minimum of 2 percent when located within 10 feet (3048 mm) of the building foundation. Impervious surfaces within 10 feet (3048 mm) of the building foundation shall be sloped a minimum of 2 percent away from the building.

Supporting Statement:

The proposal is to clarify that the first sentence in the section does not apply to areas where no effect upon the dwelling unit would result from drainage issues as the overall section is for foundation design. Drainage problems on lots which cannot be shown to have an effect on a dwelling, such as yard grading on other parts of a lot, are not within the purview of the code.

shall cease immediately. The order shall state the conditions under which such work may be resumed.

114.2 Limitation of order. A stop work order shall apply only to the work identified in the order, provided that other work on the building or structure may be continued if not concealing the work covered by the order.

SECTION 115
VIOLATIONS

115.1 Violation a misdemeanor; civil penalty. In accordance with Section 36-106 of the Code of Virginia, it shall be unlawful for any owner or any other person, firm or corporation, on or after the effective date of any code provisions, to violate any such provisions. Any locality may adopt an ordinance that establishes a uniform schedule of civil penalties for violations of specified provisions of the code that are not abated or remedied promptly after receipt of a notice of violation from the local enforcement officer.

> **Note:** See the full text of Section 36-106 of the Code of Virginia for additional requirements and criteria pertaining to legal action relative to violations of the code.

115.2 Notice of violation. The building official shall issue a written notice of violation to the responsible party if any violations of this code or any directives or orders of the building official have not been corrected or complied with in a reasonable time. The notice shall reference the code section upon which the notice is based and direct the discontinuance and abatement of the violation or the compliance with such directive or order. The notice shall be issued by either delivering a copy to the responsible party by mail to the last known address or delivering the notice in person or by leaving it in the possession of any person in charge of the premises, or by posting the notice in a conspicuous place if the person in charge of the premises cannot be found. The notice of violation shall indicate the right of appeal by referencing the appeals section. When the owner of the building or structure, or the permit holder for the construction in question, or the tenants of such building or structure, are not the responsible party to whom the notice of violation is issued, then a copy of the notice shall also be delivered to such owner, permit holder or tenants.

> **115.2.1 Notice not to be issued under certain circumstances.** When violations are discovered more than two years after the certificate of occupancy is issued or the date of initial occupancy, whichever occurred later, or more than two years after the approved final inspection for an alteration or renovation, a notice of violation shall only be issued upon advice from the legal counsel of the locality that action may be taken to compel correction of the violation. When compliance can no longer be compelled by prosecution under Section 36-106 of the Code of Virginia, the building official, when requested by the building owner, shall document in writing the existence of the violation noting the edition of the USBC the violation is under.

115.3 Further action when violation not corrected. If the responsible party has not complied with the notice of violation, the building official shall submit a written request to the legal counsel of the locality to institute the appropriate legal proceedings to restrain, correct or abate the violation or to require the removal or termination of the use of the building or structure involved. In cases where the locality so authorizes, the building official may issue or obtain a summons or warrant. Compliance with a notice of violation notwithstanding, the building official may request legal proceedings be instituted for prosecution when a person, firm or corporation is served with three or more notices of violation within one calendar year for failure to obtain a required construction permit prior to commencement of work subject to this code.

> **Note:** See Section 19.2-8 of the Code of Virginia concerning the statute of limitations for building code prosecutions.

115.4 Penalties and abatement. Penalties for violations of the USBC shall be as set out in Section 36-106 of the Code of Virginia. The successful prosecution of a violation of the USBC shall not preclude the institution of appropriate legal action to require correction or abatement of a violation.

115.5 Transfer of ownership. In accordance with Section 36-105 of the Code of Virginia, if the local building department has initiated an enforcement action against the owner of a building or structure and such owner subsequently transfers the ownership of the building or structure to an entity in which the owner holds an ownership interest greater than 50%, the pending enforcement action shall continue to be enforced against the owner.

SECTION 116
CERTIFICATES OF OCCUPANCY

116.1 General; when to be issued. A certificate of occupancy indicating completion of the work for which a permit was issued shall be obtained prior to the occupancy of any building or structure, except as provided for in this section generally and as specifically provided for in Section 113.8 for additions or alterations. The certificate shall be issued after completion of the final inspection and when the building or structure is in compliance with this code and any pertinent laws or ordinances, or when otherwise entitled. The building official shall, however, issue a certificate of occupancy within five working days after being requested to do so, provided the building or structure meets all of the requirements for a certificate.

> **Exception:** A certificate of occupancy is not required for an accessory structure as defined in the IRC.

D

Section 110.3 and to confirm continuation of work per Section 109.8 or for other inspections as directed by the building official. All ladders, scaffolds and test equipment required to complete an inspection or test shall be provided by the property owner, permit holder or their representative.

110.5. Inspections to be prompt. The building official shall respond to inspection requests without unreasonable delay. The building official shall approve the work in writing or give written notice of defective work to the permit holder or the agent in charge of the work. Such defects shall be corrected and reinspected before any work proceeds that would conceal them.

Note: A reasonable response time should normally not exceed 2 working days.

110.6. Approved inspection agencies. The building official may accept reports from individuals or inspection agencies which satisfy qualifications and reliability requirements, and shall accept such reports under circumstances where the building official is unable to make the inspection by the end of the following working day. Inspection reports shall be in writing and shall be certified by the individual inspector or by the responsible officer when the report is from an agency. An identifying label or stamp permanently affixed to the product indicating that factory inspection has been made shall be accepted instead of the written inspection report, if the intent or meaning of such identifying label or stamp is properly substantiated.

110.7. In-plant inspections. When required by the provisions of this code, materials or assemblies shall be inspected at the point of manufacture or fabrication. The building official shall require the submittal of an evaluation report of each prefabricated assembly, indicating the complete details of the assembly, including a description of the assembly and its components, the basis upon which the assembly is being evaluated, test results, and other data as necessary for the building official to determine conformance with this code.

110.8. Coordination with other agencies. The building official shall cooperate with fire, health and other State and local agencies having related maintenance, inspection or functional design responsibilities, and shall coordinate required inspections for new construction with the local fire official whenever the inspection involves provisions of the BOCA National Fire Prevention Code.

SECTION 111.0. WORKMANSHIP.

111.1. General. All construction work shall be performed and completed so as to secure the results intended by the USBC.

SECTION 112.0. VIOLATIONS.

112.1. Code violations prohibited. No person, firm or corporation shall construct, alter, extend, repair, remove, demolish or use any building or equipment regulated by the USBC, or cause same to be done, in conflict with or in violation of any of the provisions of the USBC.

112.2. Notice of violation. The building official shall serve a notice of violation on the person responsible for the construction, alteration, extention, repair, removal, demolition or use of a building in violation of the provisions of the USBC, or in violation of plans and specifications approved thereunder, or in violation of a permit or certificate issued under the provisions of the USBC. Such order shall reference the code section that serves as the basis for the violation and direct the discontinuance and abatement of the violation. Such notice of violation shall be in writing, and be served by either delivering a copy of the notice to such person by mail to the last known address, delivering the notice in person or by delivering it to and leaving it in the possession of any person in charge of the premises, or by posting the notice in a conspicuous place at the entrance door or access way if such person cannot be found on the premises.

DEPARTMENT OF PLANNING AND
COMMUNITY DEVELOPMENT
COMMUNITY DEVELOPMENT DIVISION

CITY OF SUFFOLK

442 W. WASHINGTON STREET, SUITE
1084A.P.O. BOX 1858. SUFFOLK. VIRGINIA
PHONE: (757) 514-4150 FAX (757) 514-4199

FAX COVER MEMO

TO: OFFICE OF THE STATE BUILDING CODE TECHINICAL REVIEW BOARD
VIRGINIA DEPT. OF HOUSING AND COMMUNITY DEVELOPMENT

FAX NUMBER: 1(804)371-7092

FROM: *DEPARTMENT OF PLANNING AND COMMUNITY DEVELOPMENT*

DATE: JANUARY 10, 2017

RE: REQUEST FOR INTERPRETATION

TOTAL PAGES INCLUDING THIS COVER SHEET: 4

REQUEST FOR INTERPRETATION

TO: OFFICE OF THE STATE BUILDING CODE TECHNICAL REVIEW BOARD
VIRGINIA DEPT. OF HOUSING AND COMMUNITY DEVELOPMENT
Main Street Centre
600 E. Main Street, Suite 300
Richmond, Virginia 23219-1321
Tel: (804) 371-7150 Fax: (804) 371-7092

FROM: Donald Bennett, Housing / Property Maintenance Official
City of Suffolk
Planning and Community Development
442 W. Washington Street

Phone: 1(757)514-4159

Code: 2012 Virginia Maintenance Code

Section(s): 702.4, 103.2, 105.3, 105.3.1 and Unsafe Structure definition

Submitted by (signature): Donl Bent Date: 1-10-17

QUESTION(S):

Request that my code interpretation be reviewed for accuracy:

The 2012 Virginia Maintenance Code (VMC), require smoke alarms to be installed in all bedrooms. A rental inspection conducted at 503 Harrison Street and was failed because there were no smoke alarms installed in the bedrooms. The dwelling structure was constructed in 1986 and under a different code that did not require smoke alarms to be installed in bedrooms. My interpretation of the VMC requiring smoke alarms to be installed in all bedrooms are base on the following code sections: 103.2, 105.3, 105.3.1 and Unsafe Structure definition. I am requiring smoke alarms to be installed in all bedroom in rental properties in accordance with 704.2. The installation of smoke alarms in the bedrooms will abate the unsafe conditions and an unsafe structure including life safety items. The property owner and or agent is not being asked to alter or modify the structure, but to install battery operated smoke alarms in all bedrooms.

VMC: 704.2 Smoke alarms. Single – or multiple-station smoke alarms Shall be installed and maintained in Group R or I-1 occupancies, Regardless of *occupant* load at all of the following locations:

1. On the ceiling or wall outside of each separate sleeping area in the immediate vicinity of *bedrooms*.
2. In each room used for sleeping purposes.
3. In each story within a *dwelling unit*, including *basements* and cellars but not including crawl spaces and uninhabitable attics. In dwellings or *dwelling units* with split levels and without an intervening door between the adjacent levels, a smoke alarm installed on the upper level shall suffice for the adjacent lower level provided that the lower level is less than one full story below the upper level.

VMC: 103.2 Maintenance requirements. Buildings and structures shall be maintained and kept in good repair in accordance with the requirements of this code and when applicable in accordance with the USBC under which such building or structure was constructed. No provision of this code shall require alterations to be made to an existing building or structure or to equipment unless conditions are present which meet the definition of an unsafe structure or a structure unfit for human occupancy.

105.3 Unsafe conditions not related to maintenance. When the code official finds a condition that constitutes a serious and dangerous hazard to life or health in a structure constructed prior to the initial edition of the USBC and when that condition is of a cause other than improper maintenance or failure to comply with state or local building codes that were in effect when the structure was constructed, then the code official shall be permitted to order those minimum changes to the design or construction of the structure to remedy the condition.

105.3.1 Limitation to requirements for retrofitting. In accordance with Section 103.2, this code does not generally provide for requiring the retrofitting of any structure. However, conditions may exist in structures constructed prior to the initial edition of the USBC because of faulty design or equipment that constitute a danger to life or health or a serious hazard. Any changes to the design or construction required by the code official under this section shall be only to remedy the serious hazard or danger to life or health and such changes shall not be required to fully comply with the requirements of the VCC applicable to newly constructed buildings or structures.

Unsafe Structure. An existing structure (i) determined by the code official to be dangerous to the health, safety and welfare of the occupants of the structure or the public, (ii) that contains unsafe equipment, or (iii) that is so damaged, decayed, dilapidated, structurally unsafe or of such faulty construction or unstable foundation that partial or complete collapse is likely. A vacant existing structure unsecured or open shall be deemed to be an unsafe structure.

Can a property maintenance official use Sections 103.2, 105.3, 105.3.1 and 704.2 of the 2012 VMC to require a property owner to install battery-operated smoke detectors in bedrooms of rental units built under a previous edition of the VUSBC that did not require them?

Terence R. McAuliffe
Governor

Todd P. Haymore
Secretary of
Commerce and Trade

COMMONWEALTH of VIRGINIA

DEPARTMENT OF HOUSING AND COMMUNITY DEVELOPMENT

William C. Shelton
Director

TO: Virginia Building Code Officials

FROM: Cindy L. Davis, C.B.O.. Deputy Director
Division of Building and Fire Regulation

DATE: February 1, 2017

RE: Technical Review Board Interpretation

The purpose of this memo is to distribute important information related to an interpretation of the Uniform Statewide Building Code for the purpose of ensuring uniformity throughout the Commonwealth.

At the January meeting of the Virginia State Technical Review Board, the Board heard a request for an interpretation on section 305.2.9 of the 2012 International Swimming Pool and Spa Code referenced by the Uniform Statewide Building Code.

The general question was whether or not this section required a three foot setback between the property line and the pool barrier. The decision of the board was affirmative to this question. Please see the attached formal interpretation.

Questions can be directed to sbco@dhcd.virginia.gov or you can call 804-371-7150

CLD

Attachment

VIRGINIA STATE BUILDING CODE TECHNICAL REVIEW BOARD

INTERPRETATION

Interpretation Number: 1/2017

Code: USBC, Part 1, Virginia Construction Code/2012 International Swimming Pool and Spa Code (ISPSC)

Section No(s): Section 305.2.9

Section 305.2.9 Clear zone. There shall be a clear zone of not less than 36" (914 mm) around the exterior of the *barrier* and around any permanent structures or equipment such as pumps, *filters* and heaters that can be used to climb the barrier.

QUESTION #1: May a clear zone, as required by 305.2.9, be satisfied by being located on an adjacent property?

ANSWER: No, unless the pool owner has provided written legal proof of a continuing right to use the adjacent property as long as the pool exists.

QUESTION #2: Is the property owner that is constructing the swimming pool required to install barriers a minimum of 36 inches from the property line to create the clear zone on their own property?

ANSWER: Yes, unless previously satisfied by statement above.

This Official Interpretation was issued by the State Building Code Technical Review Board at its meeting of January 20, 2017.

Chairman, State Building Code Technical Review Board

305.2.9

Proponent : Technical Review Board (TRB)

2015 International Swimming Pool and Spa Code

305.2.9 Clear zone. There shall be a clear zone of not less than 36 inches (914 mm) between the exterior of the barrier and any permanent structures or equipment such as pumps, filters and heaters that can be used to climb the barrier. The clear zone shall be on the same property as the barrier.

Exception: The clear zone may be on adjacent property if the pool owner provides written legal proof of continuing right to use the adjacent property as long as the pool exists.

Reason: This proposal is based on the Technical Review Board (TRB) interpretation 1/2017 issued at its January 20, 2017 meeting.

Cost Impact: None

Workgroup Recommendation

None

Board Decision

None