AGENDA

DHCD WORKGROUP THREE (WG3) MEETING
2015 Code Change Cycle

May 10, 2016 at 9:30 a.m.

Virginia Housing Center

1. Submitted Proposals

Virginia Construction Code	Page Number
C-113.3 Minimum inspections.	2
C-113.4.1 Testing of radon systems.	9
CR-202 Definitions.	10
CR-R302.1 Exterior walls.	13
CR-311.2.1 Interior passage.	15
CR-R311.8.1 Width.	18
CR-R408.2 Openings for underfloor ventilation.	20
CR-507.1 Decks.	22
CR-P2602.3 Tracer wire.	41
(CTP-603.3 Tracer wire.)	43
CT-G310.1 Pipe and tubing other than CSST.	45
CT-S305.2.10 Poolside barrier setbacks.	48
Additional Issues (without proposals)	
Underfloor protection	49
Whole house ventilation	51
New standard for sunrooms	53
Egress door opening to yard or court instead of to exterior	55
Exception for stem wall foundations (was in 2009)	56
USBC base document	
Available in cdpVA	--

2. Additional Discussion

3. Adjournment

C-113.3 cdpVA-15

Proponent : Bill Einloth (einloth_engle@hotmail.com)

2012 Virginia Residential Code

113.3 **Minimum Inspections** The following minimum inspections shall be conducted by the building offical when applicable to the construction or permit:

add inspection of non-vented crawl space to enusre compliance with IRC

2015 International Residential Code

R408.3 Unvented crawl space. Ventilation openings in under-floor spaces specified in Sections R408.1 and R408.2 shall not be required where the following items are provided:

1. Exposed earth is covered with a continuous Class I vapor retarder. Joints of the vapor retarder shall overlap by 6 inches (152 mm) and shall be sealed or taped. The edges of the vapor retarder shall extend not less than 6 inches (152 mm) up the stem wall and shall be attached and sealed to the stem wall or insulation.
2. One of the following is provided for the under-floor space:
    - 2.1. Continuously operated mechanical exhaust ventilation at a rate equal to 1 cubic foot per minute (0.47 L/s) for each 50 square feet (4.7 m^2) of crawl space floor area, including an air pathway to the common area (such as a duct or transfer grille), and perimeter walls insulated in accordance with Section N1102.2.11 of this code.
    - 2.2. *Conditioned air* supply sized to deliver at a rate equal to 1 cubic foot per minute (0.47 L/s) for each 50 square feet (4.7 m^2) of under-floor area, including a return air pathway to the common area (such as a duct or transfer grille), and perimeter walls insulated in accordance with Section N1102.2.11 of this code.
    - 2.3. Plenum in existing structures complying with Section M1601.5, if under-floor space is used as a plenum.

R408.5 Removal of debris. The under-floor *grade* shall be cleaned of all vegetation and organic material. All wood forms used for placing concrete shall be removed before a building is occupied or used for any purpose. All construction materials shall be removed before a building is occupied or used for any purpose.

N1102.1 (R402.1) General (Prescriptive). The *building thermal envelope* shall meet the requirements of Sections N1102.1.1 through N1102.1.4.

- **Exception:** The following low energy buildings, or portions thereof, separated from the remainder of the building by *building thermal envelope* assemblies complying with this section shall be exempt from the *building thermal envelope*

provisions of Section N1102.

1. Those with a peak design rate of energy usage less than 3.4 Btu/h · ft^2 (10.7 W/m^2) or 1.0 watt/ft^2 of floor area for space conditioning purposes.
2. Those that do not contain *conditionedspace*.

N1102.1.1 (R402.1.1) Vapor retarder. Wall assemblies in the *building thermal envelope* shall comply with the vapor retarder requirements of Section R702.7.

N1102.2.9 (R402.2.9) Basement walls. Walls associated with conditioned basements shall be insulated from the top of the *basement wall* down to 10 feet (3048 mm) below grade or to the basement floor, whichever is less. Walls associated with unconditioned basements shall meet this requirement unless the floor overhead is insulated in accordance with Sections N1102.1.2 and N1102.2.8.

N1102.2.11 (R402.2.11) Crawl space walls. As an alternative to insulating floors over crawl spaces, crawl space walls shall be permitted to be insulated when the crawl space is not vented to the outside. Crawl space wall insulation shall be permanently fastened to the wall and extend downward from the floor to the finished grade level and then vertically and/or horizontally for at least an additional 24 inches (610 mm). Exposed earth in unvented crawl space foundations shall be covered with a continuous Class I vapor retarder in accordance with this code. All joints of the vapor retarder shall overlap by 6 inches (153 mm) and be sealed or taped. The edges of the vapor retarder shall extend not less than 6 inches (153 mm) up the stem wall and shall be attached to the stem wall.

N1102.4.1 (R402.4.1) Building thermal envelope. The *building thermal envelope* shall comply with Sections N1102.4.1.1 and N1102.4.1.2. The sealing methods between dissimilar materials shall allow for differential expansion and contraction.

N1102.4.1.1 (R402.4.1.1) Installation. The components of the *building thermal envelope* as listed in Table N1102.4.1.1 shall be installed in accordance with the manufacturer's instructions and the criteria listed in Table N1102.4.1.1, as applicable to the method of construction. Where required by the *building official*, an *approved* third party shall inspect all components and verify compliance.

TABLE N1102.4.1.1
(402.4.1.1) AIR BARRIER AND INSULATION INSTALLATION

COMPONENT	AIR BARRIER CRITERIA	INSULATION INSTALLATION CRITERIA
	A continuous air barrier shall be installed in the building	

General requirements	envelope. The exterior thermal envelope contains a continuous air barrier. Breaks or joints in the air barrier shall be sealed.	Air-permeable insulation shall not be used as a sealing material.
Ceiling/attic	The air barrier in any dropped ceiling/soffit shall be aligned with the insulation and any gaps in the air barrier sealed. Access openings, drop down stairs or knee wall doors to unconditioned attic spaces shall be sealed.	The insulation in any dropped ceiling/soffit shall be aligned with the air barrier.
Walls	The junction of the foundation and sill plate shall be sealed. The junction of the top plate and the top of exterior walls shall be sealed. Knee walls shall be sealed.	Cavities within corners and headers of frame walls shall be insulated by completely filling the cavity with a material having a thermal resistance of R-3 per inch minimum. Exterior thermal envelope insulation for framed walls shall be installed in substantial contact and continuous alignment with the air barrier.
Windows, skylights and doors	The space between window/door jambs and framing, and skylights and framing shall be sealed.	
Rim joists	Rim joists shall include the air barrier.	Rim joists shall be insulated.
		Floor framing cavity

Floors (including above garage and cantilevered floors)	The air barrier shall be installed at any exposed edge of insulation.	insulation shall be installed to maintain permanent contact with the underside of subfloor decking, or floor framing cavity insulation shall be permitted to be in contact with the top side of sheathing, or continuous insulation installed on the underside of floor framing; and extends from the bottom to the top of all perimeter floor framing members.
Crawl space walls	Exposed earth in unvented crawl spaces shall be covered with a Class I vapor retarder with overlapping joints taped.	Where provided instead of floor insulation, insulation shall be permanently attached to the crawl space walls.
Shafts, penetrations	Duct shafts, utility penetrations, and flue shafts opening to exterior or unconditioned space shall be sealed.	
Narrow cavities		Batts in narrow cavities shall be cut to fit, or narrow cavities shall be filled by insulation that on installation readily conforms to the available cavity space.
Garage separation	Air sealing shall be provided between the garage and conditioned spaces.	

Recessed lighting	Recessed light fixtures installed in the building thermal envelope shall be sealed to the drywall.	Recessed light fixtures installed in the building thermal envelope shall be air tight and IC rated.
Plumbing and wiring		Batt insulation shall be cut neatly to fit around wiring and plumbing in exterior walls, or insulation that on installation readily conforms to available space shall extend behind piping and wiring.
Shower/tub on exterior wall	The air barrier installed at exterior walls adjacent to showers and tubs shall separate them from the showers and tubs.	Exterior walls adjacent to showers and tubs shall be insulated.
Electrical/phone box on exterior walls	The air barrier shall be installed behind electrical or communication boxes or air-sealed boxes shall be installed.	
HVAC register boots	HVAC register boots that penetrate building thermal envelope shall be sealed to the subfloor or drywall.	
Concealed sprinklers	When required to be sealed, concealed fire sprinklers shall only be sealed in a manner that is recommended by the manufacturer. Caulking or other adhesive sealants shall not be used to fill voids	

	between fire sprinkler cover plates and walls or ceilings.	

a. In addition, inspection of log walls shall be in accordance with the provisions of ICC 400.

Add new standard(s) as follows: VA Code 113.3 Minimum Inspections
IRC 2009 sections N1102.2.9, R408.3 and R408.5

Reason: A properly installed conditioned/encapsulation of a non-vented crawl space is critical to ensure homeowners do not become ill. Asthma, allergies, sore throats and other aliments have been proven to be caused by crawl spaces that are not properly conditioned per IRC 2009. The vapor barrier slows or prevents the evaporation of ground moisture into the crawl space which causes mold and other bacteria's to grow. Up to 40 percent of the air we breathe on the first floor of our homes comes from the crawl space. If the crawl space is allowing ground moisture to escape from the vapor barrier because it has not been taped at the seams and brought up the footer and columns with continuous plastic, you can expect health issues to arise just as my wife and I experienced in our new home. Upon finding mold growing in the window panes (see pictures) we knew action had to be taken to remedy the issue.
Attachments:

https://va.cdpaccess.com/proposal/fileupload/get/39
https://va.cdpaccess.com/proposal/fileupload/get/22
https://va.cdpaccess.com/proposal/fileupload/get/40
https://va.cdpaccess.com/proposal/fileupload/get/41
https://va.cdpaccess.com/proposal/fileupload/get/42
https://va.cdpaccess.com/proposal/fileupload/get/43
https://va.cdpaccess.com/proposal/fileupload/get/44
https://va.cdpaccess.com/proposal/fileupload/get/45
https://va.cdpaccess.com/proposal/fileupload/get/46
https://va.cdpaccess.com/proposal/fileupload/get/47
https://va.cdpaccess.com/proposal/fileupload/get/48
https://va.cdpaccess.com/proposal/fileupload/get/49
https://va.cdpaccess.com/proposal/fileupload/get/50
https://va.cdpaccess.com/proposal/fileupload/get/51
https://va.cdpaccess.com/proposal/fileupload/get/52
https://va.cdpaccess.com/proposal/fileupload/get/53
https://va.cdpaccess.com/proposal/fileupload/get/54
https://va.cdpaccess.com/proposal/fileupload/get/55
https://va.cdpaccess.com/proposal/fileupload/get/56
https://va.cdpaccess.com/proposal/fileupload/get/57
https://va.cdpaccess.com/proposal/fileupload/get/58
https://va.cdpaccess.com/proposal/fileupload/get/59
https://va.cdpaccess.com/proposal/fileupload/get/60
https://va.cdpaccess.com/proposal/fileupload/get/61

Cost Impact: None to the builder since they would indicate in the Buyers Agreement that the floors will not be insulated and no vents will be provided in the foundation walls (unsaid, it has to be conditioned). The builder can save money by doing the encapsulation/conditioning when the home is under roof or for a modular, when the home is being set. Once the home is occupied and if not an inspected item, the cost to the homeowner will be in the $15,000 to $20,000 to do the crawl space work correctly.

Workgroup Recommendation

Workgroup 1 Recommendation Recommendation: Consensus for Disapproval

Workgroup 1 Reason: No support. General consensus that the language is unnecessary.

Workgroup 3 Recommendation: None

Workgroup 3 Reason: None

Board Decision

None

C-113.3 cdpVA-15

C-113.4.1 cdpVA-15

Proponent : Campbell Gilmour (Campbell.Gilmour@comcast.net)

2012 Virginia Construction Code

113.4.1 Testing of Radon Systems. When Section R324.1 of the state amendments to the IRC is applicable, all systems shall be tested for existing levels of radon, once the interior envelope of the dwelling is enclosed with all windows, doors, and any other portal covers. If safe levels are found to be exceeded as defined by the current EPA standards, additional mitigation steps shall be taken to bring levels into compliance with EPA standards of safe levels of radon.

Reason: Intent: To ensure mandatory radon mitigation systems are tested for effectiveness to certify the safety of the public.

Need and Impact: Radon is a silent killer. Virginia is known to have high levels of radon, and thus requires at a minimum, a passive radon mitigation system. Requiring radon mitigations systems without testing those systems to ensure they are working properly, leaves unsuspecting homeowners exposed to potentially dangerous levels of a known cancer causing agent. All the while homeowners believe the system is protecting the health of their families. The only way to guarantee a system is working correctly is to test its function and effectiveness once it is installed, and the interior envelope is encapsulated.

Cost Impact: Cost to Construction: Negligible. Testing kits can be obtained for as little as $13 at local home improvement stores, which include the apparatus to test, professional lab testing, and documented results.

Workgroup Recommendation

Workgroup 1 Recommendation: None

Workgroup 1 Reason: None

Workgroup 3 Recommendation: None

Workgroup 3 Reason: None

Board Decision

None

C-113.4.1 cdpVA-15

CR-202 cdpVA-15

Proponent : Charles Bajnai, Representing Chesterfield County, (bajnaic@chesterfield.gov); Thomas Stanton (timbertrails.tv@gmail.com)

2015 International Residential Code

SECTION Chapter 2 : Definitions Tiny house.

A dwelling unit on a permanent foundation that is 399 square feet or less.

SECTION 202 DEFINITIONS

[RB] HABITABLE SPACE.

A space in a building for living, sleeping, eating or cooking. Bathrooms, toilet rooms, closets, halls, storage or utility spaces and similar areas are not considered *habitable spaces*. A mezannine in a tiny house used for sleeping shall not be considered a habitable space.

R305.1 Minimum height. *Habitable space*, hallways and portions of *basements* containing these spaces shall have a ceiling height of not less than 7 feet (2134 mm).Bathrooms, toilet rooms and laundry rooms shall have a ceiling height of not less than 6 feet 8 inches (2032 mm).

- **Exceptions:**
    1. For rooms with sloped ceilings, the required floor area of the room shall have a ceiling height of not less than 5 feet (1524 mm) and not less than 50 percent of the required floor area shall have a ceiling height of not less than 7 feet (2134 mm).
    2. The ceiling height above bathroom and toilet room fixtures shall be such that the fixture is capable of being used for its intended purpose. A shower or tub equipped with a showerhead shall have a ceiling height of not less than 6 feet 8 inches (2032 mm) above an area of not less than 30 inches (762 mm) by 30 inches (762 mm) at the showerhead.
    3. Beams, girders, ducts or other obstructions in basements containing habitable space shall be permitted to project to within 6 feet 4 inches (1931 mm) of the finished floor.
    4. For *tiny houses* the minimum headroom shall be 6'-6" below a mezannine for a minimum of 50% of the room's floor area, and at least 6'-0" for the remaining area. The headroom above the mezannine shall be 36 inches for a minimum of 9 square feet.

R310.2.5 Emergency escape and rescue opening from a tiny house. Emergency escape and rescue opening from a tiny house mezannine shall be by way of either a operable skylight of at least 5.7 square feet per section R308.6 or operable window with a net clear height of at least 18 inches.

R311.4 Vertical egress. Egress from habitable levels including habitable attics and *basements* not provided with an egress door in accordance with Section R311.2 shall be

by a ramp in accordance with Section R311.8 or a stairway in accordance with Section R311.7. Egress from a tiny house mezannine shall be by either a stairway or ladder.

R311.7.1 Width. Stairways shall be not less than 36 inches (914 mm) in clear width at all points above the permitted handrail height and below the required headroom height. Handrails shall not project more than $4^1/_2$ inches (114 mm) on either side of the stairway and the clear width of the stairway at and below the handrail height, including treads and landings, shall be not less than $31^1/_2$ inches (787 mm) where a handrail is installed on one side and 27 inches (698 mm) where handrails are provided on both sides.

Exception:

- ~~**Exception:**~~1. The width of spiral stairways shall be in accordance with Section R311.7.10.1.
- 2. The width of stairways in a tiny house shall be at least 24 inches.

R311.7.2 Headroom. The headroom in stairways shall be not less than 6 feet 8 inches (2032 mm) measured vertically from the sloped line adjoining the tread nosing or from the floor surface of the landing or platform on that portion of the stairway.

- **Exceptions:**
    1. Where the nosings of treads at the side of a flight extend under the edge of a floor opening through which the stair passes, the floor opening shall be allowed to project horizontally into the required headroom not more than $4^3/_4$ inches (121 mm).
    2. The headroom for spiral stairways shall be in accordance with Section R311.7.10.1.
    3. The headroom for the top of a stairway in a tiny house shall be at least 36 inches.

Reason: The current trend is for a return to living in smaller structures, and commonalities for Tiny Houses imply the application of best practices for small space design that do not necessarily conflict with existing standards for general health and saftety.

Cost Impact: There is no negative cost impact, and great upside for commercial interests.

Workgroup Recommendation

Workgroup 3 Recommendation: None

Workgroup 3 Reason: None

Board Decision

None

CR-R302.1 cdpVA-15

Proponent : Ronald Clements, Jr, Representing Chesterfield County (clementsro@chesterfield.gov)

2012 Virginia Residential Code

R302.1 Exterior walls.
Construction, projections, openings and penetrations of *exterior walls* of *dwellings* and accessory buildings shall comply with Table R302.1(1); or *dwellings* equipped throughout with an *automatic sprinkler system* installed in accordance with Section P2904 shall comply with Table R302.1(2).

Exceptions:

1. Walls, projections, openings or penetrations in walls perpendicular to the line used to determine the *fire separation distance*.

Walls of *dwellings* and *accessory structures* located on the same *lot*.

Detached tool sheds and storage sheds, playhouses and similar structures exempted from permits are not required to provide wall protection based on location on the *lot*.
Projections beyond the *exterior wall* shall not extend over the *lot line*.
Detached garages accessory to a *dwelling* located within 2 feet (610 mm) of a *lot line* are permitted to have roof eave projections not exceeding 4 inches (102 mm).
Foundation vents installed in compliance with this code are permitted.
Decks and open porches.
Walls of *dwellings* and *accessory structures* located on lots in sub-divisions or zoning districts where building setbacks established by local ordinance prohibit the walls of the structures on adjacent lots from being closer than 10 feet to each other at any point along the exterior walls.

Reason: It has become a routine process to issue building code modifications on a sub-division wide basis to allow dwellings on adjacent lots to be constructed without the fire-resistance rating required by R302 because the local zoning ordinance prohibits dwellings from being closer than 10 feet from each other. The zoning ordinance established set-backs effectively satisfy the intent of the code. Since these pertinent ordinances, per the USBC, are legally established limits enforced by the locality it is reasonable to accept them as a code enforcement option to meet the intent of R302.

Cost Impact: There is no cost impact for localities already allowing this through code modification. For localities not allowing through modification I would estimate $1000 to $5000 depending on the size and configuration of the wall required to be fire rated.

Workgroup Recommendation

Workgroup 1 Recommendation Recommendation: Consensus for Approval

Workgroup 1 Reason: General support from workgroup, especially from building officials.

Workgroup 3 Recommendation: None

Workgroup 3 Reason: None

Board Decision

None

CR-R302.1 cdpVA-15

CR-R311.2.1 cdpVA-15

Proponent : Charles Bajnai, Representing Chesterfield County, (bajnaic@chesterfield.gov)

2012 Virginia Residential Code

R311.2.1 Interior passage.
An interior passage route shall be provided to any of the following spaces that are on the same level as the required egress door:

1. A kitchen area,
2. If there is one or more entertainment areas, at least one area shall be required to comply,
3. If there is one or more bedrooms, at least one bedroom shall be required to comply,
4. If there is one or more bathrooms with a water closet, sink and bathtub or shower, at least one bathroom shall be required to comply, including access to the water closet.

A reasonable accommodation shall be made to provide such interior passage, including, but not limited to widening hallways via narrowing rooms, closets and vanities. Where such accommodation is not feasible, the following exceptions shall be permitted:

1. A bedroom or bathroom accessed via a hallway that is less than 40" wide when facing the doorway.
2. A bathroom accessed via a bedroom that is inaccessible by previous exception.

An interior passage route shall not be required for additions to existing houses which do not already comply.

R311.2.1.1 Interior passage opening. The interior passage route shall have either a minimum 34" wide cased opening or a minimum, nominal 34" door. Double doors which provide at least a total 34" clear opening shall be deemed to comply.

Reason: For clarity I have reposted the proposal here without any of the legislative formatting:

R311.2.1 Interior Passage. An interior passage route shall be provided to any of the following spaces that are on the same level as the required egress door:

1. A kitchen area,
2. If there is one or more entertainment areas, at least one area shall be required to comply,
3. If there is one or more bedrooms, at least one bedroom shall be required to comply,
4. If there is one or more bathrooms with a water closet, sink and bathtub or shower, at least one bathroom shall be required to comply, including access to the water closet.

A reasonable accommodation shall be made to provide such interior passage, including, but not limited to widening hallways via narrowing rooms, closets and vanities. Where such accommodation is not feasible, the following exceptions shall be permitted:

1. A bedroom or bathroom accessed via a hallway that is less than 40" wide when facing the doorway.
2. A bathroom accessed via a bedroom that is inaccessible by previous exception.

An interior passage route shall not be required for additions to existing houses which do not already comply.

R311.2.1.1 Interior passage opening. The interior passage route shall have either a minimum 34" wide cased opening or a minimum, nominal 34" door. Double doors which provide at least a total 34" clear opening shall be deemed to comply.

Reasons:

1. I applaud the intention and wisdom of the original proponents of this section. The initial knee jerk reaction by contractors was quickly replaced with acceptance and an advertising promotion for *aging in place*.

2. But the verbiage (and punctuation) in R311.2.1 has created interpretation nightmares. This proposal has tried to clarify the requirements without expanding significantly the original intent.

3. Issues I tried to clean up are:

A. There is confusion as to whether you need "both" a kitchen and entertainment areas before the bedroom and/or bathroom requirement(s) kicks in - or is the bedroom and/or bathroom on the same level as the egress door an independent requirement??? Similarly are the bedroom and bathroom independent requirements or are they a conjoined requirement where "both" are required before the requirement kicks in. I have written it to mean that all four areas are required independent of the others.

B. The question concerning the access to a water closet in a toilet compartment has caused many hours of debate across the commonwealth. It makes perfect sense to require access also the the water closet, even if it is in a toilet compartment. It makes no sense of getting a person into the bathroom, and then allowing obstacles to using the fixtures.

C. Questions arise whether two, 2' doors are acceptable to meet the 34" door requirement. In my opinion, double doors can accomplish the same thing.

D. Questions come up as to whether additions should be made to comply. I do not think it make sense if the house is not already compliant.

E. The biggest challenge has been hallways. The wording regarding the exception for rooms that are "at the end and facing the length of a hallway" has been a challenge. While the original intention of the proposal was for a narrow hallway, "L" and "T" shaped hallways have created more questions than answers. See example figure.

The situation shown in the figure happens all too frequently. Assuming that bedrooms 2 and 3 are the only options for compliance, the question is: should either door 1 or 3 be required to comply, even if it means narrowing a closet or narrowing the living room a few inches? Similarly should the bathroom be widened (or the vanity made narrower) to accommodate a 34" door if that is the only bathroom option? Is it unreasonable to expect the builder to make reasonable accommodations to comply?

The requirement to make "reasonable accommodation" should not be dismissed as too vague, subjective and unenforceable. Similar language is already used in ADA requirements for employers to provide "reasonable accommodations" for their employees who need special help to perform their work.

F. The current code does not offer any help when it comes to defining the minimum hallway width and the size of expected "door trim". I have offered 40" as the minimum hallway width allowing 2" trim. Leaving this vague does not allow plan reviewers to do his/her job.

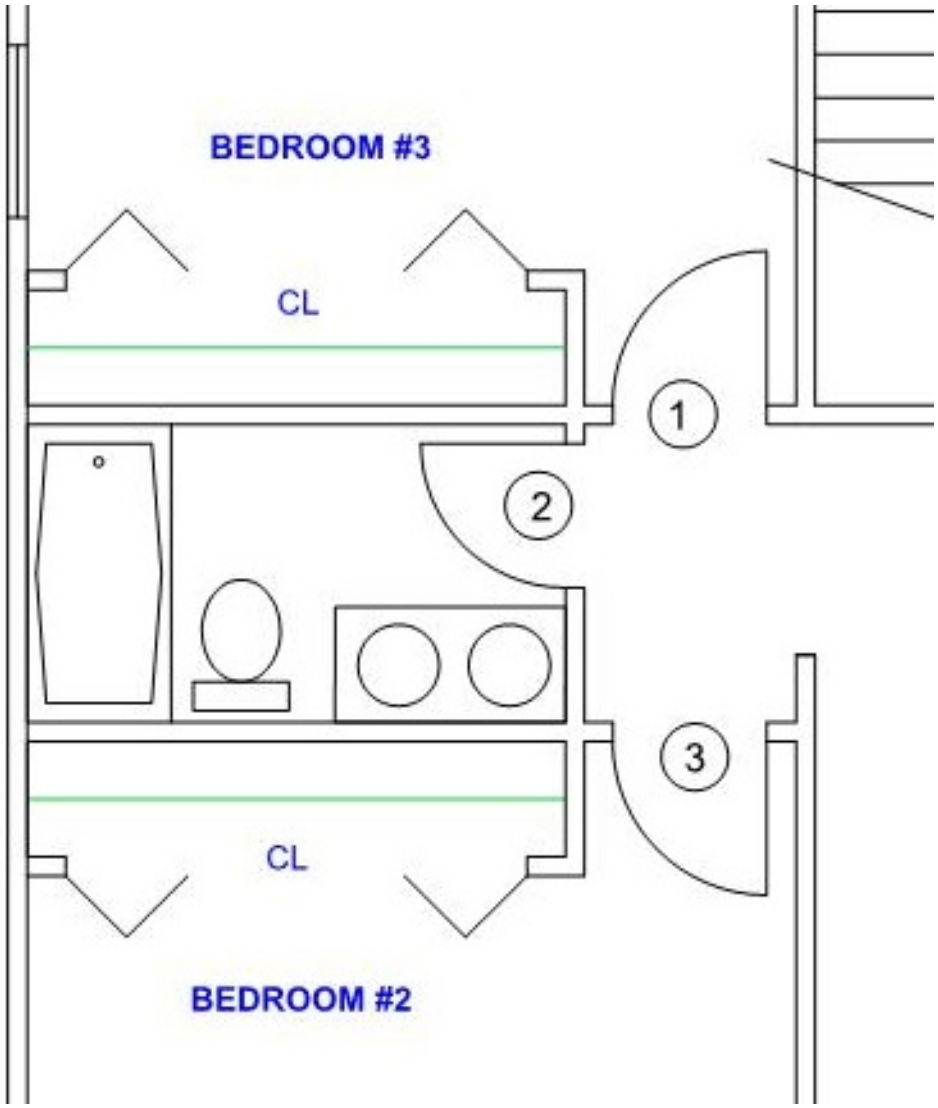

While these issues might seem rare, they are real issues that come up on EVERY house. Each jurisdiction has had to wrestle with them and come up with its own interpretation.

Cost Impact: There should be minimal cost impact to the contractors. The cost of 34" doors is already accepted under the 2012 Virginia Residential Code. The only A. cost increase would be if there would be a 34" door into toilet compartments, which is currently part of the confusion.

Workgroup Recommendation

Workgroup 3 Recommendation: None

Workgroup 3 Reason: None

Board Decision

None

CR-R311.2.1 cdpVA-15

CR-R311.8.1 cdpVA-15

Proponent : Charles Bajnai (bajnaic@chesterfield.gov)

2012 Virginia Residential Code

R311.8.1 Width. Ramps, including landings, shall be not less than 36 inches in clear width at all points above the permitted handrail height. Handrails shall not project more than 4-1/2 inches on either side of the ramp and the clear width of the ramp at and below the handrail height shall not be less than 31-1/2 inches where the handrail is installed on one side and 27 inches where handrails are provided on both sides.

Reason: We have requirement for stair width, but not ramp width. We have always inferred the stair width of 36" would be the same for ramps.
This code proposal removes the "interpretation" and specifies that ramps have to be at least 36" wide.

Cost Impact: None. We have always inferred 36" ramp width

Workgroup Recommendation

Workgroup 3 Recommendation: None

Workgroup 3 Reason: None

Board Decision

None

CR-R408.2 cdpVA-15

Proponent : Ken Latham, Representing Self / Design Community (ken@GoSdd.Com)

2012 Virginia Residential Code

R408.2 Openings for under-floor ventilation. The minimum net area of ventilation openings shall not be less than 1 square foot (0.0929 m^2) for each 150 square feet (14 m^2) of under-floor area. One ventilation opening shall be within 3 feet (915 mm) of each corner of the building. Ventilation openings shall be covered for their height and width with any of the following materials provided that the least dimension of the covering shall not exceed ¼ inch (6.4 mm):

1. Perforated sheet metal plates not less than 0.070 inch (1.8 mm) thick.
2. Expanded sheet metal plates not less than 0.047 inch (1.2 mm) thick.
3. Cast-iron grill or grating.
4. Extruded load-bearing brick vents.
5. Hardware cloth of 0.035 inch (0.89 mm) wire or heavier.
6. Corrosion-resistant wire mesh, with the least dimension being ⅛ inch (3.2 mm) thick.

Exception: The total area of ventilation openings shall be permitted to be reduced to 1/1,500 of the under-floor area where the ground surface is covered with an *approved* Class I vapor retarder material and the required openings are placed to provide cross ventilation of the space. The installation of operable louvers shall not be prohibited, nor shall the required openings need to be within 3 feet (915 mm) of each corner provided there is cross ventilation of the space.

Reason: This intent of this change has been written to address the non-uniform code enforcement of the USBC 2012 / IRC 2012 Section R408.2 exception shown below. In the IRC 2003 the STATE BUILDING CODE TECHNICAL REVIEW BOARD concluded in Code Interpretation No. 1/2003 that foundation vents were ***not required*** to be placed within 3 feet of each corner(see below). Under IRC 2012 the wording for the exception is essentially the same as IRC 2003. The building inspection departments are still requiring a vent within 3 foot of every corner. Some localities have even made a stamp to place on the plans stating such. Even showing the calculations for the foundation vents required and the number shown on the plan as well as showing the "Code Interpretation No. 1/2003 ". Still the building inspection departments are writing or stamping "vent required within 3 foot of every corner" forcing the builders to install non-required vents and introducing extra moisture to the foundation space.
INTERPRETATIONS OF THE VIRGINIA UNIFORM STATEWIDE BUILDING CODE *Section 310.3 (International Residential Code Section R408.2) Code Interpretation No. 1/2003 First Issued: 11/18/05, 2003 Edition* ***QUESTION: Does Exception No. 2 provide an exception to the general requirement that one ventilation opening shall be within three feet of each corner? ANSWER: Yes, provided the openings are placed so as to provide cross-ventilation.*** on 9/9/2015 Vernon Hodges reconfirmed vents are not required to be 3 foot from the corners .

The need for this change is to help clarify the code for the building officials allowing all localities

to uniformly enforce the code provisions. This will remove the subjective interpretation of this section.

Cost Impact: The cost is very minimal savings.

Workgroup Recommendation

Workgroup 3 Recommendation: None

Workgroup 3 Reason: None

Board Decision

None

CR-R408.2 cdpVA-15

CR-R507.1 cdpVA-15

Proponent : Charles Bajnai, Representing Chesterfield County, (bajnaic@chesterfield.gov)

2015 International Residential Code

R507.1 Decks. ~~Wood-framed decks shall be in accordance with this section or Section R301 for materials and conditions not prescribed herein. Where supported by attachment to an exterior wall, decks shall be positively anchored to the primary structure and designed for both vertical and lateral loads.~~

~~Such attachment shall not be accomplished by the use of toenails or nails subject to withdrawal. Where positive connection to the primary building structure cannot be verified during inspection, decks shall be self-supporting. For decks with cantilevered framing members connections to exterior walls or other framing members shall be designed and constructed to resist uplift resulting from the full live load specified in Table R301.5 acting on the cantilevered portion of the deck.~~

R507.2 Deck ledger connection to band joist. ~~Deck ledger connections to band joists shall be in accordance with this section, Tables R507.2 and R507.2.1, and Figures R507.2.1(1) and R507.2.1(2). For other grades, species, connection details and loading conditions, deck ledger connections shall be designed in accordance with Section R301.~~

R507.3 Plastic composite deck boards, stair treads, guards, or handrails. ~~Plastic composite exterior deck boards, stair treads, guards and handrails shall comply with the requirements of ASTM D 7032 and the requirements of Section 507.3.~~

R507.4 Decking. ~~Maximum allowable spacing for joists supporting decking shall be in accordance with Table R507.4. Wood decking shall be attached to each supporting member with not less than (2) 8d threaded nails or (2) No. 8 wood screws.~~

R507.5 Deck joists. ~~Maximum allowable spans for wood deck joists, as shown in Figure R507.5, shall be in accordance with Table R507.5. Deck joists shall be permitted to cantilever not greater than one-fourth of the actual, adjacent joist span.~~

R507.6 Deck Beams. ~~Maximum allowable spans for wood deck beams, as shown in Figure R507.6, shall be in accordance with Table R507.6. Beam plies shall be fastened with two rows of 10d (3 inch × 0.128 inch) nails minimum at 16 inches (406 mm) on center along each edge. Beams shall be permitted to cantilever at each end up to one-fourth of the actual beam span. Splices of multispan beams shall be located at interior post locations.~~

R507.7 Deck joist and deck beam bearing. ~~The ends of each joist and beam shall have not less than $1\frac{1}{2}$ inches (38 mm) of bearing on wood or metal and not less than 3 inches (76 mm) on concrete or masonry for the entire width of the beam. Joist~~

~~framing into the side of a ledger board or beam shall be supported by approved joist hangers. Joists bearing on a beam shall be connected to the beam to resist lateral displacement.~~

R507.8 Deck posts. ~~For single-level wood-framed decks with beams sized in accordance with Table R507.6, deck post size shall be in accordance with Table R507.8.~~

SECTIONR508 DECKS

R508.1 Decks. Wood-framed decks shall be in accordance with this section or designed in accordance with Section R301 for materials and conditions not prescribed herein. Where joists or beams are cantilevered, the supporting framing shall be designed to resist uplift resulting from the live load specified in Table R301.5 acting on the cantilevered portion of the deck.

R508.1.1 Freestanding decks. Freestanding decks shall be self-supporting and constructed to provide a complete load path to transfer both vertical and lateral loads to their foundation. The lateral resistance shall be designed in accordance with accepted engineering practice.

R508.1.2 Decks attached to a structure. Decks which are not freestanding shall be attached to a structure that provides a complete load path for both vertical and lateral loads in accordance with Section R508.8. Such attachment shall not be accomplished by the use of toenails or nails subject to withdrawal. Where connections to the supporting structure in Section R508.8 cannot be verified, decks shall be freestanding in accordance with Section R508.1.1.

R508.2 Materials. Materials used for the construction of decks shall comply with this section.

R508.2.1 Wood materials. All wood materials shall be No.2 grade or better lumber, preservative-treated in accordance with Section R317 or approved, naturally durable lumber, and termite protected where required in accordance with Section R318. Where design in accordance with Section R301 is provided, all wood structural members shall be designed using the wet service factor defined in AWC NDS. All cuts, notches, and drilled holes of preservative treated wood members shall be treated in accordance with Section R317.1.1. All preservative-treated wood products in contact with the ground shall be labeled for such usage.

R508.2.1.1 Engineered wood products. Engineered wood products shall be in accordance with Section R502.

R508.2.2 Plastic composite deck boards, stair treads, guards and handrails. Plastic composite exterior deck boards, stair treads, guards and handrails

shall comply with this section and the requirements of ASTM D 7032.

R508.2.2.1 Labeling. Plastic composite deck boards and stair treads, or their packaging, shall bear a label that indicates compliance to ASTM D 7032 and includes the allowable load and maximum allowable span determined in accordance with ASTM D 7032. Plastic or composite handrails and guards, or their packaging, shall bear a label that indicates compliand to ASTM D 7032 and includes the maximum allowable span determined in accordance with ASTM D 7032.

R508.2.2.2 Flame spread index. Plastic composite deck boards, stair treads, guards, and handrails shall exhibit a flame spread index not exceeding 200 when tested in accordance with ASTM E 84 or UL 723 with the test specimen remaining in place during the test.

Exception: Plastic composites determined to be non- combustible.

R508.2.2.3 Decay resistance. Plastic composite deck boards, stair treads, guards and handrails containing wood, cellulosic or other biodegradable materials shall be decay resistant in accordance with ASTM D 7032.

R508.2.2.4 Termite resistance. Where required by Section 318, plastic composite deck boards, stair treads, guards and handrails containing wood, cellulosic or other biodegradable materials shall be termite resistant in accordance with ASTM D 7032.

R508.2.2.5 Installation of plastic composites. Plastic composite deck boards, stair treads, guards and handrails shall be installed in accordance with this code and the manufacturer's instructions.

R508.2.3 Fasteners and connectors. Metal fasteners and connectors used for all decks shall be in accordance with Section R317.3 and Table R507.2.3.

TABLE R508.2.3
FASTENER AND CONNECTOR SPECIFICATIONS FOR DECKS [a,b,c]

	BASIC FASTENER REQUIREMENTS		ALTERNATIVE MATERIALS, COATINGS AND FINISHES
ITEM	MATERIAL	MINIMUM FINISH/COATING	
Nails and timber rivets	In accordance with ASTM F1667	Hot-dipped galvanized per ASTM A 153	Stainless steel; silicon bronze, or

			copper
Bolts [c] and lag screws [d] (including nuts and washers)	In accordance with ASTM A 307	Hot-dipped galvanized per ASTM A153 Class C (Class D for 3/8" diameter or less) or mechanically galvanized per ASTM B 695, Class 55 or 410 stainless steel	Stainless steel; silicon bronze, or copper
Metal connectors	Per manufacturer's specification	ASTM A653 type G185 zinc coated galvanized steel or Hot-dipped galvanized per ASTM A123 providing average coating weight of 2.0 oz/ft2 (total both sides)	Stainless steel

a. Equivalent materials, coatings and finishes shall be subject to approval by the building official provided equivalent performance is demonstrated by the manufacturer of the fastener or connector.

b. Fasteners and connectors exposed to salt water or located within 300 feet of a salt water shoreline shall be stainless steel.

c. Holes for bolts shall be drilled a minimum 1/32" and a maximum 1/16" larger than the bolt.

d. Lag screws ½" and larger shall be predrilled to avoid wood splitting per National Design Specification (NDS) for Wood Construction.

e. Stainless steel driven fasteners shall be in accordance with ASTM F 1667.

R508.2.4 Flashing. Flashing shall be corrosion-resistant metal of minimum nominal 0.019 inch thickness or approved non-metallic material that is compatible with the substrate of the structure and the decking materials.

R508.2.5 Alternative materials. Alternative materials, including glass and metals shall be permitted.

R508.3 Footings. Decks shall be supported on concrete footings or other approved structural systems designed to accommodate all loads according to Section R301.
Exception: Freestanding decks consisting of joists directly supported on grade over their entire length.

R508.3.1 Minimum size. The minimum size of concrete footings shall be in accordance with Table R508.3.1, based on the tributary area and allowable soil bearing pressure in accordance with Table R401.4.1.

R508.3.2 Minimum depth. Deck footings shall extend below the frost line specified in Table R301.2(1) in accordance with Section R403.1.4.1.

Exception:

1. Freestanding decks need not be provided with footings that extend below the frost line.

2. Freestanding decks that meet all of the following criteria:
   a. The joists bear directly on precast concrete pier blocks at grade without support by beams or posts,
   b. The area of the deck does not exceed 200 square feet (18.9 m^2),
   c. The walking surface is not more than 20 inches (616 mm) above grade at any point within 36 inches (914 mm) measured horizontally from the edge.

FIGURE 0
MINIMUM FOOTING SIZE FOR DECKS

MINIMUM FOOTING SIZE for DECKS [a, c, d] (sqft)													
		SOIL BEARING CAPACITY (psf)											
		1500			2000			2500			>3000		
LIVE or GROUND SNOW LOAD [b] (psf)	TRIBUTARY AREA [e] (sqft)	side of a square footing (in) □	diameter of a round footing (in) ○	thickness (in)	side of a square footing (in) □	diameter of a round footing (in) ○	thickness (in)	side of a square footing (in) □	diameter of a round footing (in) ○	thickness (in)	side of a square footing (in) □	diameter of a round footing (in) ○	thickness (in)
40	20	12	14	6	12	14	6	12	14	6	12	14	6
	40	14	16	6	12	14	6	12	14	6	12	14	6
	60	17	19	6	15	17	6	13	15	6	12	14	6
	80	20	22	7	17	19	6	15	17	6	14	16	6
	100	22	25	8	19	21	6	17	19	6	15	17	6
	120	24	27	9	21	23	7	19	21	6	17	19	6
	140	26	29	10	22	25	8	20	23	7	18	21	6
	160	28	31	11	24	27	9	21	24	8	20	22	7
50	20	12	14	6	12	14	6	12	14	6	12	14	6
	40	15	17	6	13	15	6	12	14	6	12	14	6
	60	19	21	6	16	18	6	14	16	6	13	15	6
	80	21	24	8	19	21	6	17	19	6	15	17	6
	100	24	27	9	21	23	7	19	21	6	17	19	6
	120	26	30	10	23	26	8	20	23	7	19	21	6
	140	28	32	11	25	28	9	22	25	8	20	23	7
	160	30	34	12	26	30	10	24	27	9	21	24	8
60	20	12	14	6	12	14	6	12	14	6	12	14	6
	40	16	19	6	14	16	6	13	14	6	12	14	6
	60	20	23	7	17	20	6	16	18	6	14	16	6
	80	23	26	9	20	23	7	18	20	6	16	19	6
	100	26	29	10	22	25	8	20	23	7	18	21	6
	120	28	32	11	25	28	9	22	25	8	20	23	7
	140	31	35	12	27	30	10	24	27	9	22	24	8
	160	33	37	13	28	32	11	25	29	10	23	26	9
70	20	12	14	6	12	14	6	12	14	6	12	14	6
	40	18	20	6	15	17	6	14	15	6	12	14	6
	60	21	24	8	19	21	6	17	19	6	15	17	6
	80	25	28	9	21	24	8	19	22	7	18	20	6
	100	28	31	11	24	27	9	21	24	8	20	22	7
	120	30	34	12	26	30	10	24	27	9	21	24	8
	140	33	37	13	28	32	11	25	29	10	23	26	9
	160	35	40	15	30	34	12	27	31	11	25	28	9

a. Interpolation permitted, extrapolation not permitted
b. Based on highest load case: Dead + Live or Dead + Snow

c. Assumes minimum square footing to be 12" x 12" x 6" for 6x6 post.
d. If the support is a brick or cmu pier, the footing shall have a minimum 2" projection on all sides.
e. Area, in square feet, of deck surface supported by post and footing.

R508.4 Deck posts. For single-level wood-framed decks with beams sized in accordance with Table R508.6, deck post size shall be in accordance with Table R508.4.

R508.4.1 Deck post to deck footing connection. Posts shall bear on footings in accordance with Section R403 and Figure R508. 4.1. Posts shall be restrained to prevent lateral displacement at the bottom support. Where posts bear on concrete footings in accordance with Section R403 and Figure R508.4.1, such lateral restraint shall be provided by manufactured connectors or a minimum post embedment of 12 inches in surrounding soils or concrete piers. Other footing systems shall be permitted.
EXCEPTION: Where expansive, compressible, shifting or other questionable soils are present, surrounding soils shall not be relied upon for lateral support.

TABLE ~~R507.8~~R508.4
DECK POST HEIGHT[a]

DECK POST SIZE	MAXIMUM HEIGHT[a]
4 × 4	6'-9" [c]
4 × 6	8'
6 × 6	14'
8 x 8	14'

For SI: 1 foot = 304.8 mm.

a.Measured to the underside of the beam
b. Based on 40 psf live
c. Maximum permitted height is 8' for one-ply and two-ply beams. 6'-9" is the maximum permitted height for three-ply beams.

FIGURE 0
DECK POST TO DECK FOOTING CONNECTION

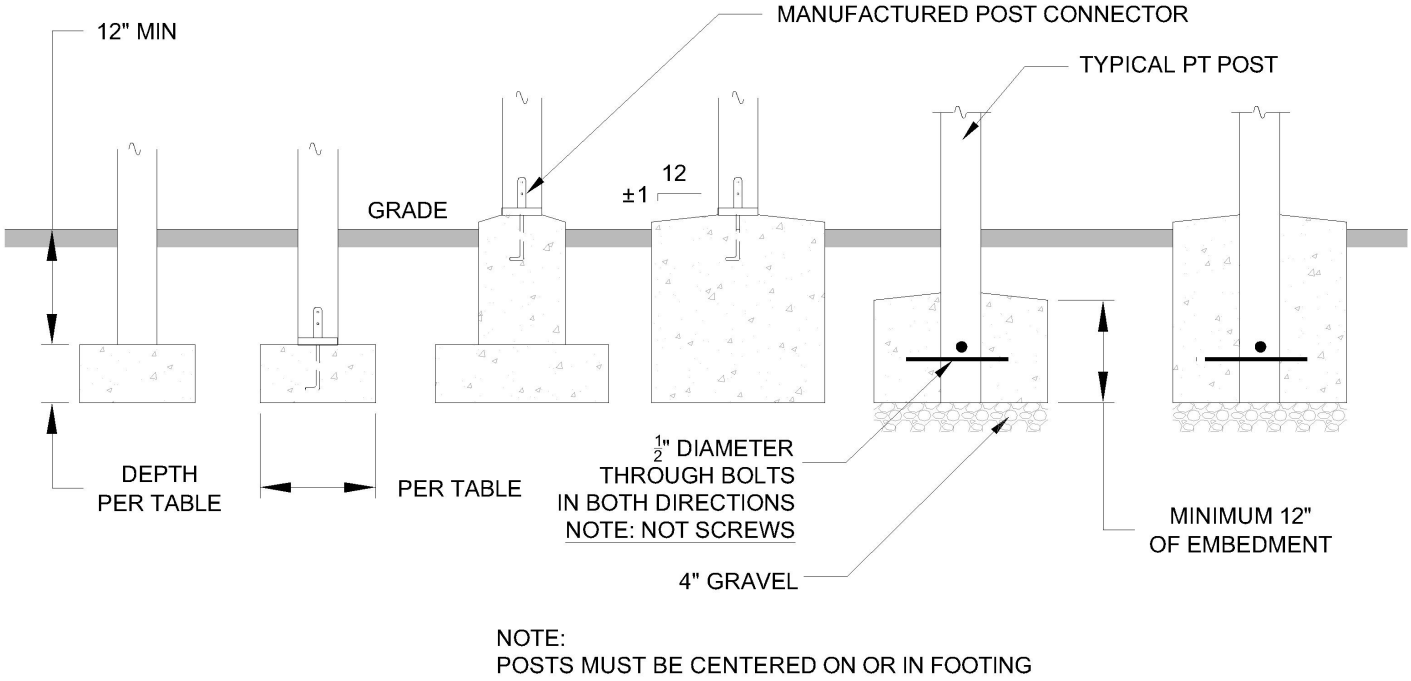

R508.5 Deck beams. Maximum allowable spans for wood deck beams, as shown in Figure R508.5, shall be in accordance with Table R508.5. Beam plies shall be fastened with two rows of 10d (3-inch x 0.128-inch) nails minimum at 16 inches (406 mm) on center along each edge. Beams shall be permitted to cantilever at each end up to one-fourth of the adjacent beam span. Splices of multispan beams shall be located at interior post locations.

R508.5.1 Deck post to deck beam connection. Deck beams shall be attached to deck posts in accordance with Figure R508.5.1 or by other equivalent means capable to resist lateral displacement. Manufactured post-to-beam connectors shall be sized for the post and beam sizes. All bolts shall have washers under the head and nut.

TABLE ~~R507.6~~R508.5
DECK BEAM SPAN LENGTHS[a, b] (ft. - in.)

SPECIES[c]	SIZE[d]	DECK JOIST SPAN LESS THAN OR EQUAL TO: (feet)						
		6	8	10	12	14	16	18

Southern pine	2 – 2 × 6	6-11	5-11	5-4	4-10	4-6	4-3	4-0
	2 – 2 × 8	8-9	7-7	6-9	6-2	5-9	5-4	5-0
	2 – 2 × 10	10-4	9-0	8-0	7-4	6-9	6-4	6-0
	2 – 2 × 12	12-2	10-7	9-5	8-7	8-0	7-6	7-0
	3 – 2 × 6	8-2	7-5	6-8	6-1	5-8	5-3	5-0
	3 – 2 × 8	10-10	9-6	8-6	7-9	7-2	6-8	6-4
	3 – 2 × 10	13-0	11-3	10-0	9-2	8-6	7-11	7-6
	3 – 2 × 12	15-3	13-3	11-10	10-9	10-0	9-4	8-10
Douglas fir-larch[e] , hem-fir[e] , spruce-pine-fir[e] , redwood, western cedars, ponderosa pine[f] , red pinef	3 × 6 or 2 – 2 x 6	5-5	4-8	4-2	3-10	3-6	3-1	2-9
	3 × 8 or 2 – 2 × 8	6-10	5-11	5-4	4-10	4-6	4-1	3-8
	3 × 10 or 2 – 2 × 10	8-4	7-3	6-6	5-11	5-6	5-1	4-8
	3 × 12 or 2 – 2 × 12	9-8	8-5	7-6	6-10	6-4	5-11	5-7
	4 × 6	6-5	5-6	4-11	4-6	4-2	3-11	3-8
	4 × 8	8-5	7-3	6-6	5-11	5-6	5-2	4-10
	4 × 10	9-11	8-7	7-8	7-0	6-6	6-1	5-8
	4 × 12	11-5	9-11	8-10	8-1	7-6	7-0	6-7

	3 – 2 × 6	7-4	6-8	6-0	5-6	5-1	4-9	4-6
	3 – 2 × 8	9-8	8-6	7-7	6-11	6-5	6-0	5-8
	3 – 2 × 10	12-0	10-5	9-4	8-6	7-10	7-4	6-11
	3 – 2 × 12	13-11	12-1	10-9	9-10	9-1	8-6	8-1

For SI: 1 inch = 25.4 mm, 1 foot = 304.8 mm, 1 pound per square foot = 0.0479 kPa, 1 pound = 0.454 kg.

a.Ground snow load, live load = 40 psf, dead load = 10 psf, L/Δ = 360 at main span, L/Δ = 180 at cantilever with a 220-pound point load applied at the end.

b.Beams supporting deck joists from one side only.

c.No. 2 grade, wet service factor.

d.Beam depth shall be greater than or equal to depth of joists with a flush beam condition.

e.Includes incising factor.

f.Northern species. Incising factor not included.

FIGURE 0
TYPICAL DECK BEAM SPANS

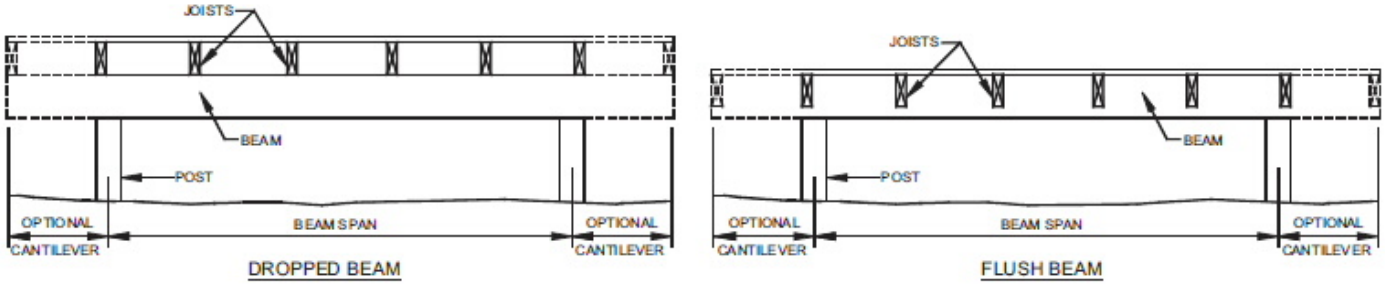

FIGURE 0
DECK BEAM TO DECK POST

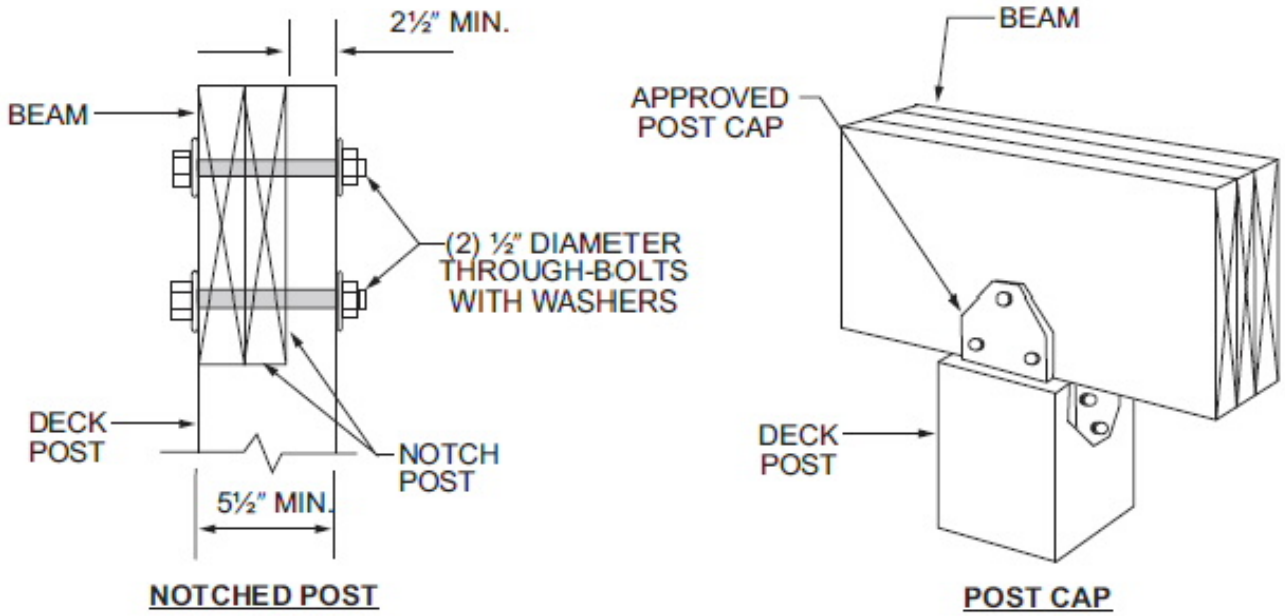

For SI: 1 inch = 25.4 mm.

R508.6 Deck joists. Maximum allowable spans for wood deck joists, as shown in Figure R508.6, shall be in accordance with Table R508.6. The maximum joist spacing shall be limited by the decking material in accordance with Table R508.7. The maximum joist cantilever shall be limited to the actual joist span divided by 4 or the maximum cantilever length specified in Table R508.6, whichever is less.

FIGURE 0
TYPICAL DECK JOIST SPANS

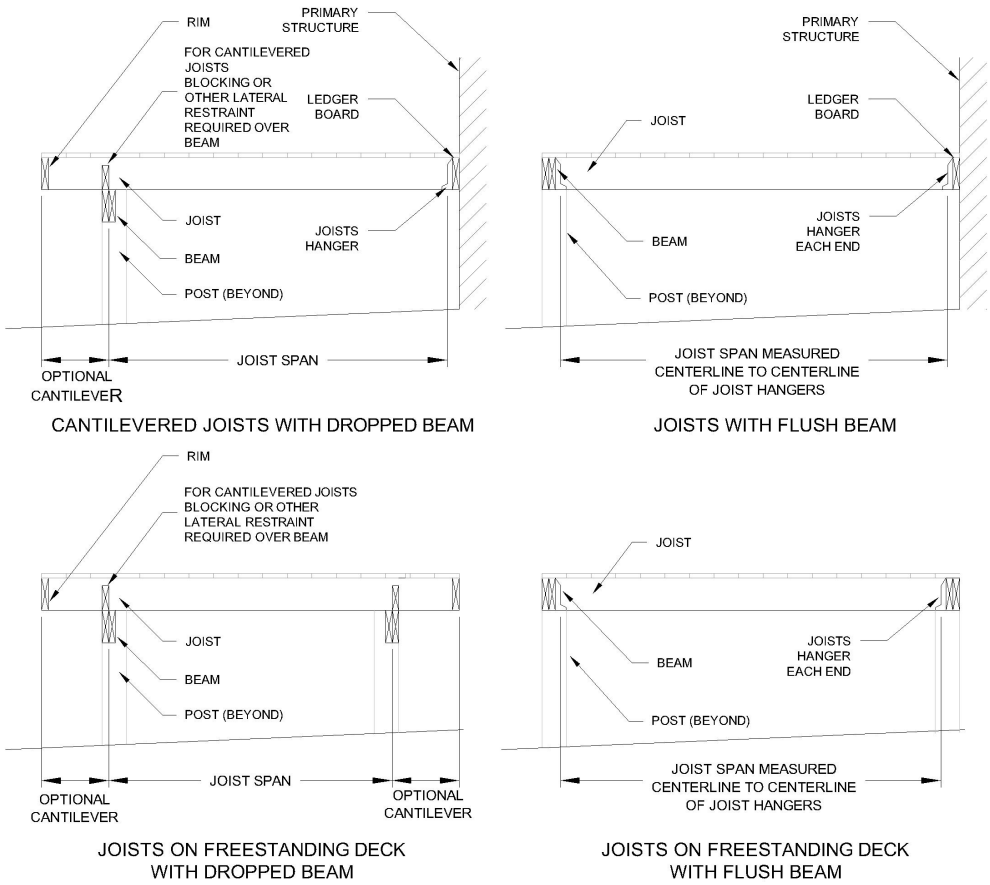

R508.6.1 Deck joist bearing. The ends of joist shall have not less than 1 1/2 inches (38mm) of bearing on wood or metal and not less than 3 inches (76 mm) on concrete or masonry over its entire bearing width. Joists bearing on top of a multi-ply beam or ledger shall be fastened in accordance with Table R602.3(1). Joists bearing on top of a single ply beam or ledger shall be attached by a mechanical connector. Joists framing into the side of a beam or ledger board shall be supported by approved joist hangers.

R508.6.2 Deck joist lateral restraint. Joist ends and bearing locations shall be provided with lateral restraint to prevent rotation. Where lateral restraint is provided by joist hangers or blocking between joists, their depth shall equal not less than 60 percent of the joist depth. Where lateral restraint is provided by rim joists, they shall be secured to the end of each joist with not less than (3) 10d (3-inch x 0.128-inch) nails or (3) No. 10 x 3-inch (76 mm) long wood screws.

TABLE ~~R507.5~~R508.6
DECK JOIST SPANS FOR COMMON LUMBER SPECIES[f] (ft. - in.)

		SPACING OF DECK JOISTS WITH NO CANTILEVER[b]	SPACING OF DECK JOISTS WITH CANTILEVERS[c]

SPECIES[a]	SIZE	(inches)			(inches)		
		12	**16**	**24**	**12**	**16**	**24**
Southern pine	2 × 6	9-11	9-0	7-7	6-8	6-8	6-8
	2 × 8	13-1	11-10	9-8	10-1	10-1	9-8
	2 × 10	16-2	14-0	11-5	14-6	14-0	11-5
	2 × 12	18-0	16-6	13-6	18-0	16-6	13-6
Douglas fir-larch[d], hem-fir[d] spruce-pine-fir[d]	2 × 6	9-6	8-8	7-2	6-3	6-3	6-3
	2 × 8	12-6	11-1	9-1	9-5	9-5	9-1
	2 × 10	15-8	13-7	11-1	13-7	13-7	11-1
	2 × 12	18-0	15-9	12-10	18-0	15-9	12-10
Redwood, western cedars, ponderosa pine[e], red pine[e]	2 × 6	8-10	8-0	7-0	5-7	5-7	5-7
	2 × 8	11-8	10-7	8-8	8-6	8-6	8-6
	2 × 10	14-11	13-0	10-7	12-3	12-3	10-7
	2 × 12	17-5	15-1	12-4	16-5	15-1	12-4

For SI: 1 inch = 25.4 mm, 1 foot = 304.8 mm, 1 pound per square foot = 0.0479 kPa, 1 pound = 0.454 kg.

a. No. 2 grade with wet service factor.

b. Ground snow load, live load = 40 psf, dead load = 10 psf, L/Δ = 360.

c. Ground snow load, live load = 40 psf, dead load = 10 psf, L/Δ = 360 at main span, L/Δ = 180 at cantilever with a 220-pound point load applied to end.

d. Includes incising factor.

e. Northern species with no incising factor

f. Cantilevered spans not exceeding the nominal depth of the joist are permitted.

R508.7 DECKING Maximum allowable spacing for joists supporting decking shall be in accordance with Table R508.7. Wood decking shall be attached to each supporting member with not less than (2) 8d threaded nails or (2) No. 8 wood screws. Other types of decking or fastener systems shall be permitted in accordance with

manufacturer's installation requirements.

TABLE ~~R507.4~~R508.7
MAXIMUM ~~JOIST SPACING~~ SPANS FOR DECKING

MATERIAL TYPE AND NOMINAL SIZE	MAXIMUM ON-CENTER JOIST SPACING	
	Perpendicular to joist	**Diagonal to joista**
$1^1/_4$ -inch-thick wood	16 inches	12 inches
2-inch-thick wood	24 inches	16 inches
Plastic composite	In accordance with Section R507.3	In accordance with Section R507.3

For SI: 1 inch = 25.4 mm, 1 foot = 304.8 mm, 1 degree = 0.01745 rad.

a. Maximum angle of 45 degrees from perpendicular for wood deck boards

R07.8 Vertical and lateral supports at band joist. Vertical and lateral supports for decks shall comply with this section.

R508.8.1 Vertical supports.

R508.8.1.1 Ledger details. Deck ledgers shall be a minimum 2-inch by 8-inch nominal, pressure-preservative-treated southern pine, incised pressure-preservative-treated Hem-fir, or approved, naturally durable, No.2 grade or better lumber. Deck ledgers shall not support concentrated loads from beams or girders. Deck ledgers shall not be supported on stone of or masonry veneer.

R508.8.1.2 Band joist details Band joists supporting a ledger shall be a minimum 2-inch-nominal (51 mm), solid-sawn, spruce-pine-fir or better lumber, or a minimum 1-inch by 9½ - inch (25 mm x 241 mm), dimensional Douglas fir or better, laminated veneer lumber. Band joists shall bear fully on the primary structure capable of supporting all required loads. .

R508.8.1.3 Ledger to band joist fastener details. Fasteners used in deck ledger connections in accordance with Table R508.8.1.3(1) shall be hot-dipped galvanized or stainless steel and shall be installed in accordance with Table R508.8.1.3(2) and Figures R508.8.1.3(1) and R508.8.1.3(2).

R508.8.1.4 Alternate ledger details. Alternate framing configurations supporting a ledger constructed to meet the load requirements of Section R301.5 shall be permitted.

R508.8.2 Lateral connections. Lateral loads shall be transferred to the ground or to a structure capable of transmitting them to the ground.
Where the lateral load connection is provided in accordance with Figure R508.8.2(1), hold-down tension devices shall be installed in not less than two locations per deck, within 24 inches of each end of the deck. Each device shall have an allowable stress design capacity of not less than 1,500 pounds (6672 N).

Where the lateral load connections are provided in accordance with Figure R508.8.2(2), the hold-down tension devices shall be installed in not less than four locations per deck, and each device shall have an allowable stress design capacity of not less than 750 pounds (3336 N)

TABLE ~~R507.2~~R508.8.1
DECK LEDGER CONNECTION TO BAND JOIST[a, b] (Deck live load = 40 psf, deck dead load = 10 psf, snow load ≤ 40 psf)

CONNECTION DETAILS	JOIST SPAN						
	6′ and less	6′1″ to 8′	8′1² to 10′	10′1″ to 12′	12′1″ to 14′	14′1″ to 16′	16′1″ to 18′
	On-center spacing of fasteners						
$^1/_2$-inch diameter lag screw with $^1/_2$-inch maximum sheathing[c, d]	30	23	18	15	13	11	10
$^1/_2$-inch diameter bolt with $^1/_2$-inch maximum sheathing[d]	36	36	34	29	24	21	19
$^1/_2$-inch diameter bolt with 1-inch maximum sheathing[e]	36	36	29	24	21	18	16

For SI: 1 inch = 25.4 mm, 1 foot = 304.8 mm, 1 pound per square foot = 0.0479 kPa.

a. Ledgers shall be flashed in accordance with Section R703.4 to prevent water from contacting the house band joist.

b. Snow load shall not be assumed to act concurrently with live load.

c. The tip of the lag screw shall fully extend beyond the inside face of the band joist.

d. Sheathing shall be wood structural panel or solid sawn lumber.

e. Sheathing shall be permitted to be wood structural panel, gypsum board, fiberboard, lumber or foam sheathing. Up to $^{1}/_{2}$ -inch thickness of stacked washers shall be permitted to substitute for up to $^{1}/_{2}$inch of allowable sheathing thickness where combined with wood structural panel or lumber sheathing.

TABLE ~~R507.2.1~~R508.8.1.3
PLACEMENT OF LAG SCREWS AND BOLTS IN DECK LEDGERS AND BAND JOISTS

MINIMUM END AND EDGE DISTANCES AND SPACING BETWEEN ROWS				
	TOP EDGE	**BOTTOM EDGE**	**ENDS**	**ROW SPACING**
Ledger[a]	2 inches[d]	$^{3}/_{4}$ inch	2 inches[b]	$1^{5}/_{8}$ inches[b]
Band Joist[c]	$^{3}/_{4}$ inch	2 inches	2 inches[b]	$1^{5}/_{8}$ inches[b]

For SI: 1 inch = 25.4 mm.

a. Lag screws or bolts shall be staggered from the top to the bottom along the horizontal run of the deck ledger in accordance with Figure R507.2.1(1).

b. Maximum 5 inches.

c. For engineered rim joists, the manufacturer's recommendations shall govern.

d. The minimum distance from bottom row of lag screws or bolts to the top edge of the ledger shall be in accordance with Figure R507.2.1(1).

FIGURE 1
PLACEMENT OF LAG SCREWS AND BOLTS IN LEDGERS

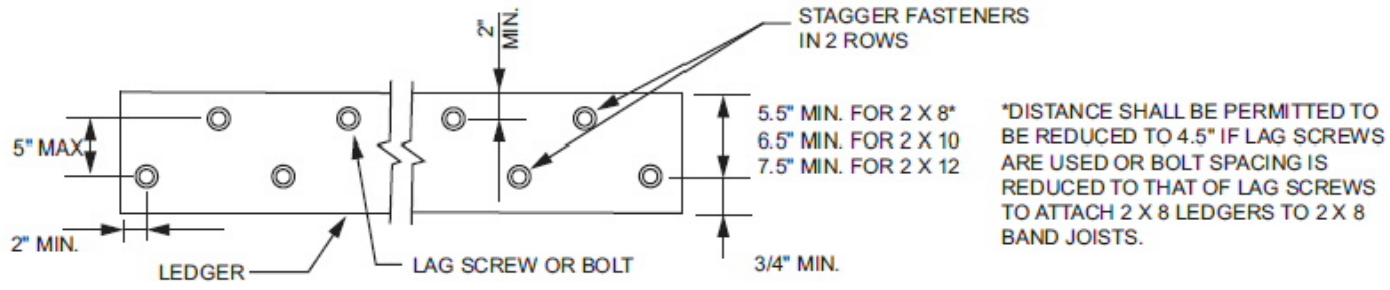

For SI: 1 inch = 25.4 mm.

For SI: 1 inch = 25.4 mm.

FIGURE 2
PLACEMENT OF LAG SCREWS AND BOLTS IN BAND JOISTS

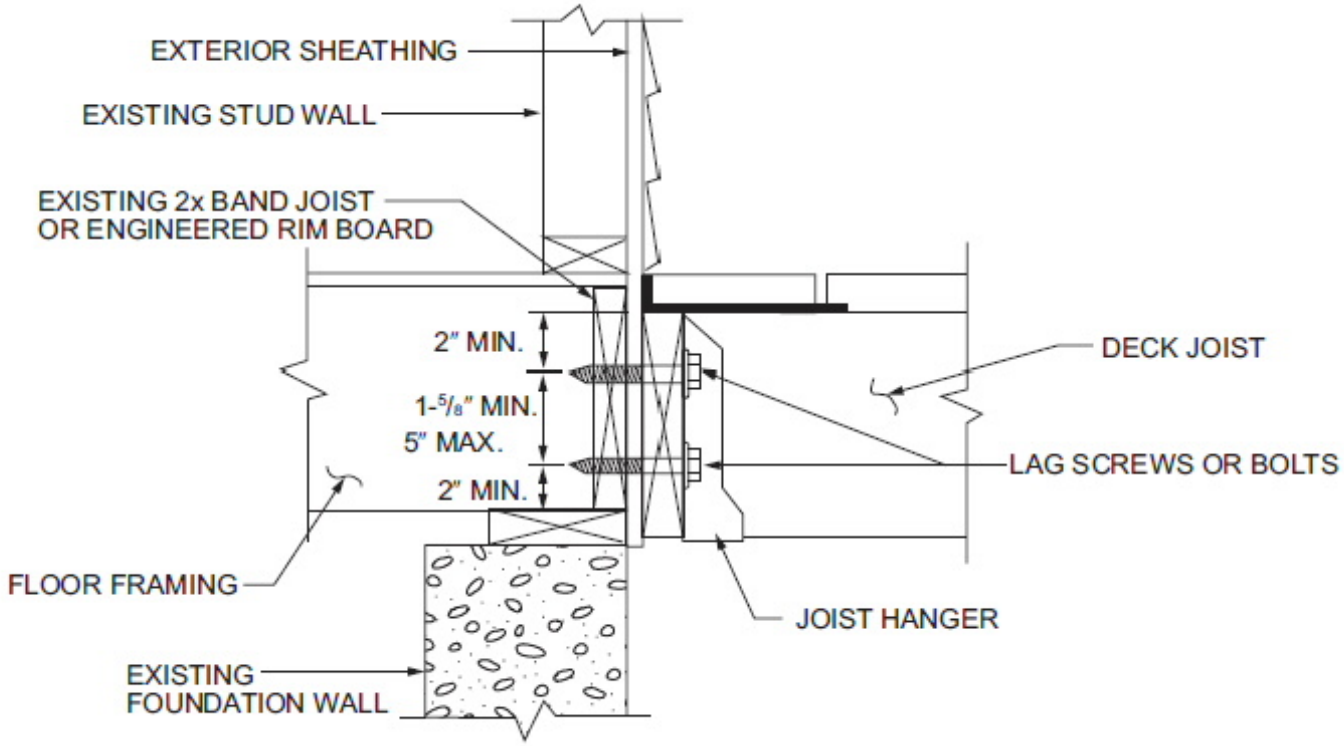

FIGURE 1
DECK ATTACHMENT FOR LATERAL LOADS

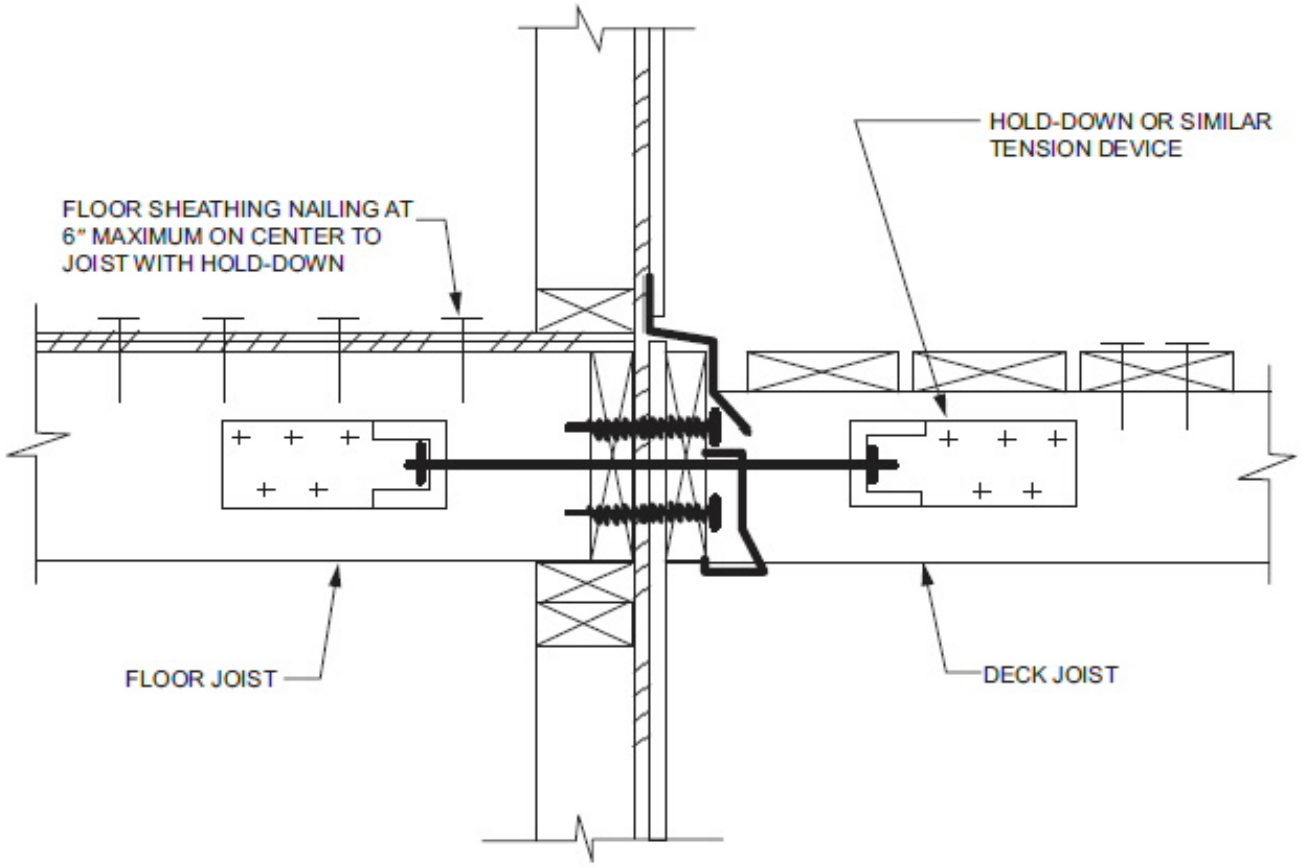

For SI: 1 inch = 25.4 mm.

For SI: 1 inch = 25.4 mm, 1 foot = 304.8 mm.

FIGURE 2
DECK ATTACHMENT FOR LATERAL LOADS

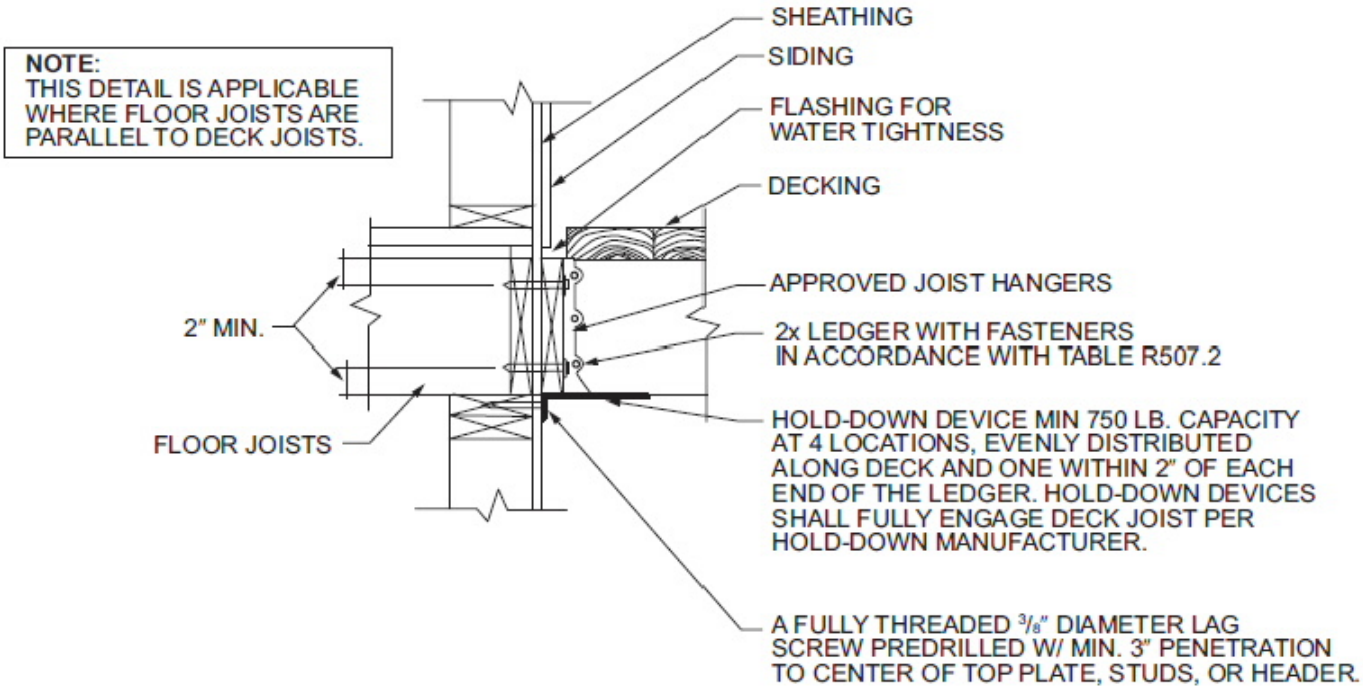

Reason: This proposal was approved in Louisville last week. It is intended to provide prescriptive language and fill in the missing parts of R507 for the weekend warrior and yet not stiffle the creativity of custom deck builders.
The Deck Code Coalition will be submitting public comments in Kansas City for the remaining items that were not approved in Louisville, namely freestanding decks, deck beams and guards. If these public comments get passed, I will be submitting last minute changes for the Board to consider.

This proposal does several things:

1. It provides the missing pieces that were not included in the past version of R507.

2. It reorganizes the material in a "ground up" order similar to the other parts of the IRC, starting with footings, to posts, to beams, etc.

3. NOTE: for ease of submittal and your reading/comprehending, I deleted all of R507 and inserted all new text. Unfortuantely cdpAccess does not play well with this vast deletion, so I was forced to create all new section which I called R508. In the end, R508 will be renumbered as R507.

Cost Impact: To this point there has been no real increase to the deck cost. We have provided more options which may in fact lower the cost.
If and when "guards" is put into the code is when the cost will go up for additional hardware and labor.

Workgroup Recommendation

Workgroup 3 Recommendation: None

Workgroup 3 Reason: None

Board Decision

None

CR-R507.1 cdpVA-15

CR-P2602.3 cdpVA-15

2602.3 (New)

Proponent : Carl Dale (carl.dale@scc.virginia.gov)

2015 International Residential Code

2602.3 **Tracer Wire** P2602.3 Tracer Wire. Nonmetallic water piping shall be locatable. An insulated copper tracer wire, 18 AWG minimum in size and suitable for direct burial or an equivalent product shall be utilized. The wire shall be installed in the same trench as the water piping and within 12 inches (305 mm) of the pipe and shall be installed to within five feet (1524 mm) of the building wall to the point where the building water intersects with the public water supply. At a minimum, one end of the wire shall terminate above grade in an accessible location that is resistant to physical damage, such as with a meter vault or at the building wall.

Reason: In February 2014, a home exploded in Stafford County Virginia. The explosion was caused by damage to a nonmetallic water service utility line ("water lateral") that had not been installed with a tracer wire and had not been located prior to excavation. This excavation damaged the water lateral in the process of installing the natural gas utility service line. When the water was turned on for final occupancy permitting, the escaping water created an abrasive spray on the gas utility service line. The gas utility service line then ruptured due to the abrasive spray. Natural gas migrated into the home and found an ignition source which destroyed the home just days prior to occupancy.
The addition of a tracer wire requirement to non-metallic water piping in the Uniform Statewide Building Code ("USBC") will bring another layer of public safety inspection to construction sites across the Commonwealth. Local building inspectors would be empowered to inspect non-metallic water laterals for locatability as it pertains to the USBC at time of installation. These inspections would be similar to the inspection of non-metallic sewer utilities that are currently covered by the USBC.

Local building inspectors are regularly on-site at or near the time of installation of these water laterals during their construction. The building inspectors' ability to inspect/enforce this proposed requirement will minimize the chances of similar circumstances such as the Stafford explosion from occurring again by ensuring all non-metallic water laterals have tracer wires to facilitate excavators locating the water lateral for safe excavation around the water lateral.

This proposed change will also mirror the other requirements set forth in the Commonwealth under; § 56-257.1. "*Means of locating nonmetallic underground conduits*" and § 56-265.20:1. "*Locating nonmetallic underground utility lines*". It should also be noted that at least three municipalities, the Counties of Halifax[1], Loudoun[2], and the City of Charlottesville[3] in the Commonwealth, require non-metallic water laterals to have tracer wires on them.

[1] Halifax County Service Authority, "Minimum Requirements for Contractors performing work in relation to the Authority's Potable Water and Sanitary Sewer System", http://www.hcsa.us/files/HCSA-Tracer-Wire---General-Construction-Requirements.pdf (accessed December 16, 2014)

[2] Loudoun Water, "Letter to the Industry, February 10, 2011" Loudoun County http://www.loudounwater.org/uploadedFiles/Loudoun_Water/Developers_and_New_Construction/trace *(accessed December 16, 2014).*

[3] City of Charlottesville, *Potable Water and Sanitary Sewer Standard Specifications and Details*, (City of Charlottesville, January 2012) 24.

Cost Impact: The impact on both construction cost and time, along with the impact to the inspection process, would be minimal. Two large homebuilders in the Commonwealth have estimated total construction costs for installing tracer wire on water utility lines at .45 cents a foot for an estimated $25-30 per water service line installed. Currently during the new home construction process, sanitary sewer and water utilities are inspected at or near the same time for other USBC requirements. This inspection would only require a nominal amount of time for inspecting for the presence and type of a tracer wire on a water lateral that is already being inspected under other USBC requirements.

Workgroup Recommendation

Workgroup 3 Recommendation: None

Workgroup 3 Reason: None

Workgroup 4 Recommendation: None

Workgroup 4 Reason: None

Board Decision

None

CR-P2602.3 cdpVA-15

CTP-603.3 cdpVA-15

Proponent : Carl Dale (carl.dale@scc.virginia.gov)

2015 International Plumbing Code

603.3 Tracer Wire 603.3 Tracer wire. Nonmetallic water piping shall be locatable. An insulated copper tracer wire, 18 AWG minimum in size and suitable for direct burial or an equivalent product shall be utilized. The wire shall be installed in the same trench as the water piping and with-in 12 inches (305 mm) of the pipe and shall be installed to within five feet (1524 mm) of the building wall to the point where the building water intersects with the public water supply. At a minimum, one end of the wire shall terminate above grade in an accessible location that is resistant to physical damage, such as with a meter vault or at the building wall.

Reason: In February 2014, a home exploded in Stafford County Virginia. The explosion was caused by damage to a nonmetallic water service utility line ("water lateral") that had not been installed with a tracer wire and had not been located prior to excavation. This excavation damaged the water lateral in the process of installing the natural gas utility service line. When the water was turned on for final occupancy permitting, the escaping water created an abrasive spray on the gas utility service line. The gas utility service line then ruptured due to the abrasive spray. Natural gas migrated into the home and found an ignition source which destroyed the home just days prior to occupancy.
The addition of a tracer wire requirement to non-metallic water piping in the Uniform Statewide Building Code ("USBC") will bring another layer of public safety inspection to construction sites across the Commonwealth. Local building inspectors would be empowered to inspect non-metallic water laterals for locatability as it pertains to the USBC at time of installation. These inspections would be similar to the inspection of non-metallic sewer utilities that are currently covered by the USBC.

Local building inspectors are regularly onsite at or near the time of installation of these water laterals during their construction. The building inspectors' ability to inspect/enforce this proposed requirement will minimize the chances of similar circumstances such as the Stafford explosion from occurring again by ensuring all non-metallic water laterals have tracer wires to facilitate excavators locating the water lateral for safe excavation around the water lateral.

This proposed change will also mirror the other requirements set forth in the Commonwealth under; § 56-257.1. "*Means of locating nonmetallic underground conduits*" and § 56-265.20:1. "*Locating nonmetallic underground utility lines*". It should also be noted that at least three municipalities, the Counties of Halifax[1], Loudoun[2], and the City of Charlottesville[3] in the Commonwealth, require non-metallic water laterals to have tracer wires on them.

[1] Halifax County Service Authority, "Minimum Requirements for Contractors performing work in relation to the Authority's Potable Water and Sanitary Sewer System", http://www.hcsa.us/files/HCSA-Tracer-Wire---General-Construction-Requirements.pdf (accessed December 16, 2014)

[2] Loudoun Water, "Letter to the Industry, February 10, 2011" Loudoun County http://www.loudounwater.org/uploadedFiles/Loudoun_Water/Developers_and_New_Construction/trace *(accessed December 16, 2014).*

[3] City of Charlottesville, *Potable Water and Sanitary Sewer Standard Specifications and Details*, (City of Charlottesville, January 2012) 24.

Cost Impact: The impact on both construction cost and time, along with the impact to the inspection process, would be minimal. Two large homebuilders in the Commonwealth have estimated total construction costs for installing tracer wire on water utility lines at .45 cents a foot for an estimated $25-30 per water service line installed. Currently during the new home construction process, sanitary sewer and water utilities are inspected at or near the same time for other USBC requirements. This inspection would only require a nominal amount of time for inspecting for the presence and type of a tracer wire on a water lateral that is already being inspected under other USBC requirements.

Workgroup Recommendation

Workgroup 3 Recommendation: None

Workgroup 3 Reason: None

Workgroup 4 Recommendation: None

Workgroup 4 Reason: None

Board Decision

None

CTP-603.3 cdpVA-15

CT-G310.1 cdpVA-15

Proponent : Bob Torbin (bob.torbin@omegaflex.net)

2015 International Fuel Gas Code

310.1 Pipe and tubing ~~other than CSST.~~ Each aboveground portion of a gas *piping* system ~~other than corrugated stainless steel tubing (CSST)~~ that is likely to become energized shall be electrically continuous and bonded to an effective ground-fault current path. Gas *piping* ~~other than CSST~~ shall be considered to be bonded where it is connected to appliances that are connected to the *equipment* grounding conductor of the circuit supplying that *appliance*. Corrugated Stainless steel tubing (CSST) piping systems listed with an arc resistant jacket or coating system in accordance with ANSI LC-1 shall comply with this section. Where any CSST segments of a piping system are not listed with an arc resistant jacket or coating system in accordance with ANSI LC-1, Section 310.1.1 shall apply.

310.1.1 CSST~~.~~ without arc resistant jacket or coating system ~~Corrugated stainless steel tubing (~~
CSST~~)~~ gas *piping* systems and piping systems containing one or more segments of CSST not listed with an arc resistant jacket or coating system in accordance with ANSI LC-1 shall be bonded to the electrical service grounding electrode system or, where provided, the lightning protection grounding electrode system and shall comply with Sections 310.1.1.1 through 310.1.1.5.

2015 International Residential Code

G2411.1 (310.1) Pipe and tubing ~~other than CSST.~~ Each above-ground portion of a *gas piping system* ~~other than corrugated stainless steel tubing (CSST)~~ that is likely to become energized shall be electrically continuous and bonded to an effective ground-fault current path. *Gas piping* ~~other than CSST~~ shall be considered to be bonded where it is connected to *appliances* that are connected to the equipment grounding conductor of the circuit supplying that *appliance*. Corrugated stainless steel tubing (CSST) piping systems listed with an arc resistant jacket or coating system in accordance with ANSI LC-1 shall comply with this section. Where any CSST segments of a piping system are not listed with an arc resistant jacket or coating system in accordance with ANSI LC-1, Section G2411.1.1 shall apply.

G2411.1.1 (310.1.1) CSST without arc resistant jacket or coating system. ~~Corrugated stainless steel tubing (~~
CSST~~)~~ gas *piping* systems and piping systems containing one or more segments of CSST not listed with an arc resistant jacket or coating system in accordance with ANSI LC-1 shall be bonded to the electrical service grounding electrode system or, where provided, the lightning protection electrode system and shall comply with Sections G2411.1.1.1 through G2411.1.1.5.

Add new standard(s) as follows: ANSI LC-1-2014/CSA 6.26-2014 Fuel gas piping systems using corrugated stainless steel tubing

Reason:
The use of a CSST product with a protective, arc resistant jacket is an equivalent method of protection against electrical arcing damage caused by high voltage transient events such as lightning strikes. The protective jacket is designed to locally absorb and dissipate the arcing energy or conduct it away. The jacket, in essence, disrupts the focus of the arc and reduces the energy level below the threshold value that can cause a perforation of the tubing wall. This dynamic action is equally effective compared to the current CSST bonding method as confirmed by ICC ES PMG 1058. The protection against arcing is provided uniformly throughout the piping system, and is not affected by close proximity to other metallic systems that may not be similarly bonded.

The CSA Technical Sub-Committee for national consensus standard ANSI LC-1 (2014) added performance criteria for arc resistant jackets in 2014 which is why this standard reference was updated. These criteria provide the ability to determine if the CSST jacket can resist damage from transient arcing currents under conditions associated with lightning strikes. The ANSI LC-1 Standard defines the experimental means to determine whether the protective jacket provides resistance to damage from lightning strikes without the need for additional bonding as prescribed currently in G2411.1.1 of the 2015 edition of the International Residential Code and Section 310.1.1 of the International Fuel Gas Code. In addition, the ANSI LC-1 standard includes performance criteria for jacket wear/tear resistance, resistance to low temperature embrittlement, and resistance (of metallic components) to corrosion (when applicable). The ICC Evaluation Service has also performed an assessment of the arc resistant jacket technology, and has issued PMG listings for all three commercially available "black" CSST products.

In support of the 2015 edition of the NFPA 54 Code, extensive testing was performed under the management of the Gas Technology Institute to demonstrate the effectiveness of the prescribed method of bonding for CSST. That report was submitted and accepted by the NFGC Technical Committee in support of modifications made to the 2012 CSST bonding requirements. That same report (and test conditions) was used as the basis for a new study (performed by PowerCET) to examine the ability of the arc resistant jacket to provide the equivalent level of protection (or better) against arcing damage. That report is included with this proposal, and demonstrates that arc-resistant jackets will provide equal or better protection against lighting induced arcing as the bonding of standard CSST.

CSST with arc-resistant jacket has been commercially installed since 2004, and at the present time, three different (black-jacketed) products are commercially available. Field experience has been very favorable with over 125 million feet installed and only two confirmed cases of indirect or direct lightning damage to CSST piping systems using these black jackets. Currently, at least 15 states (as shown below) permit the installation of the arc resistant CSST without the need for additional bonding. Both conventional (yellow) and advanced (black) CSST products will continue to be commercially available and installed in new and existing buildings. Given that both methods of electrical protection of CSST systems have been demonstrated to be effective, they should be recognized and permitted in the Commonwealth of Virginia. The 2018 IFGC will include arc resistant CSST without the need for additional bonding when that language is extracted from the 2018 NFPA 54. We are asking that Virginia recognize those changes with the adoption of the 2015 IFGC.

States currently permitting black jacket CSST without additional bonding per Section 7.13.2:

Massachusetts	Oklahoma	Nebraska
Connecticut	Colorado	Montana
Rhode Island	New Jersey	Georgia
Wisconsin	North Dakota	Indiana
Michigan	Oregon	Maryland

Supporting Documentation:

http://media.iccsafe.org/cdpva/CSST_doc.pdf

Cost Impact: While arc-resistant CSST may cost 5-8 percent more per foot compared to conventional (yellow) CSST, there will be no negative cost impact to either the builder or the home owner. The additional cost of arc resistant CSST is offset by the savings associated with the cost of CSST bonding which includes two bonding clamps, 75-ft of #6 AWG copper conductor and the associated installation labor.

Workgroup Recommendation

Workgroup 4 Recommendation: None

Workgroup 4 Reason: None

Workgroup 3 Recommendation: None

Workgroup 3 Reason: None

Board Decision

None

CT-G310.1 cdpVA-15

CT-S305.2.10 cdpVA-15

Proponent : Michael Redifer (mredifer@nnva.gov)

2015 International Swimming Pool and Spa Code

305.2.10 ~~Poolside~~B~~b~~arrier setbacks. The pool or spa side of the required barrier shall be not less than 20 inches (508 mm) from the water's edge. The required barrier shall be not less than 36 inches (914 mm) from any lot line.

Reason: Establishing a setback from lot lines equal to the clear zone dimension of 36 inches (305.2.9) will ensure future activity by adjacent property owner will not require relocation of the barrier in order to maintain the established level of safety.

Cost Impact: This will increase the cost of construction in cases where using an existing fence on an adjacent property is preferable to installing a barrier located entirely on the property where the pool is located.

Workgroup Recommendation

Workgroup 3 Recommendation: None

Workgroup 3 Reason: None

Workgroup 4 Recommendation: None

Workgroup 4 Reason: None

Board Decision

None

CT-S305.2.10 cdpVA-15

R302.13

Fire Protection of Floors

CHANGE TYPE: Clarification

CHANGE SUMMARY: The provisions for fire protection of floors have been relocated from Chapter 5 to the fire-resistant construction provisions of Section R302. New language clarifies that the code does not regulate penetrations or openings in the fire protection membrane.

2015 CODE: ~~**R501.3**~~ **R302.13** **Fire protection of floors.** Floor assemblies~~,~~ that are not required elsewhere in this code to be fire-resistance rated, shall be provided with a ½-inch (12.7 mm) gypsum wallboard membrane, ⅝-inch (16 mm) wood structural panel membrane, or equivalent on the underside of the floor framing member. Penetrations or openings for ducts, vents, electrical outlets, lighting, devices, luminaires, wires, speakers, drainage, piping, and similar openings or penetrations shall be permitted.

Exceptions: *(No change to text.)*

CHANGE SIGNIFICANCE: Fire protection of floors first appeared in Section R501.3 of the 2012 IRC. The provisions call for installation of ½-inch gypsum board, ⅝-inch wood structural panel, or other approved material on the underside of floor assemblies of buildings constructed under the IRC. The application of gypsum wallboard or other approved material intends to provide some protection to the floor system against the effects of fire and delay collapse of the floor. This provision primarily is aimed at light-frame construction consisting of I-joists, manufactured floor trusses, cold-formed steel framing, and other materials and manufactured products considered most susceptible to collapse in a fire. Solid-sawn lumber and structural composite lumber perform fairly well in retaining adequate strength under fire conditions, and floors framed of

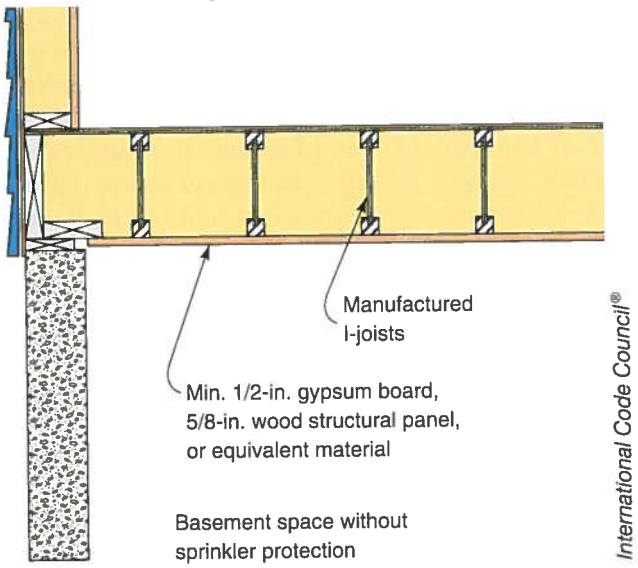

Fire protection of floors

International Code Council®

Open web floor trusses requiring membrane protection on the underside

nominal 2 × 10s or larger of these materials are exempt from these fire protection requirements. Fire protection also is not required if sprinklers are installed to protect the space below the floor assembly.

In the 2009 IRC, there was an effort to organize all of the fire-resistance provisions into a single section to make the code more user-friendly. Because the installation of the code-prescribed membrane intends to provide some limited protection against the effects of fire to the floor system, the requirements have been relocated to the fire-resistant construction provisions of Section R302.

Similar to the fire separation requirements for an attached garage in Section R302.6, the membrane applied to the underside of the floor system does not form a fire-resistant-rated assembly. The membrane acts to shield light-frame floor systems from the heat of a fire originating in the space below the floor. The intent is for the floor system to perform similarly to unprotected 2 × 10 solid-sawn lumber floor joists and to delay structural collapse of the floor system. For that reason, the code does not require any special treatment of joints, penetrations, or openings in the ceiling membrane. For example, the taping of the gypsum board joints is not required and penetrations for electrical boxes and plumbing pipes do not require any firestopping materials. The added language intends to simply clarify that the code does not regulate openings and penetrations in the membrane applied to the underside of the floor system.

SECTION M1506
EXHAUST DUCTS AND EXHAUST OPENINGS

M1506.1 Duct construction. Where exhaust duct construction is not specified in this chapter, construction shall comply with Chapter 16.

M1506.2 Duct length. The length of exhaust and supply ducts used with ventilating equipment shall not exceed the lengths determined in accordance with Table M1506.2.

Exception: Duct length shall not be limited where the duct system complies with the manufacturer's design criteria or where the flow rate of the installed ventilating equipment is verified by the installer or approved third party using a flow hood, flow grid or other airflow measuring device.

M1506.3 Exhaust openings. Air exhaust openings shall terminate not less than 3 feet (914 mm) from property lines; 3 feet (914 mm) from operable and nonoperable openings into the building and 10 feet (3048 mm) from mechanical air intakes except where the opening is located 3 feet (914 mm) above the air intake. Openings shall comply with Sections R303.5.2 and R303.6.

SECTION M1507
MECHANICAL VENTILATION

M1507.1 General. Where local exhaust or whole-house mechanical ventilation is provided, the equipment shall be designed in accordance with this section.

M1507.2 Recirculation of air. Exhaust air from bathrooms and toilet rooms shall not be recirculated within a residence or to another *dwelling unit* and shall be exhausted directly to the outdoors. Exhaust air from bathrooms and toilet rooms shall not discharge into an *attic*, crawl space or other areas inside the building.

M1507.3 Whole-house mechanical ventilation system. Whole-house mechanical ventilation systems shall be designed in accordance with Sections M1507.3.1 through M1507.3.3.

M1507.3.1 System design. The whole-house ventilation system shall consist of one or more supply or exhaust fans, or a combination of such, and associated ducts and controls. Local exhaust or supply fans are permitted to serve as such a system. Outdoor air ducts connected to the return side of an air handler shall be considered as providing supply ventilation.

M1507.3.2 System controls. The whole-house mechanical ventilation system shall be provided with controls that enable manual override.

M1507.3.3 Mechanical ventilation rate. The whole-house mechanical ventilation system shall provide outdoor air at a continuous rate of not less than that determined in accordance with Table M1507.3.3(1).

Exception: The whole-house mechanical ventilation system is permitted to operate intermittently where the system has controls that enable operation for not less than 25-percent of each 4-hour segment and the ventilation rate prescribed in Table M1507.3.3(1) is multiplied by the factor determined in accordance with Table M1507.3.3(2).

TABLE M1506.2
DUCT LENTH

DUCT TYPE	FLEX DUCT								SMOOTH-WALL DUCT							
Fan airflow rating (CFM @ 0.25 inch wc[a])	50	80	100	125	150	200	250	300	50	80	100	125	150	200	250	300
Diameter[b] (inches)	Maximum length[c, d, e] (feet)															
3	X	X	X	X	X	X	X	X	5	X	X	X	X	X	X	X
4	56	4	X	X	X	X	X	X	114	31	10	X	X	X	X	X
5	NL	81	42	16	2	X	X	X	NL	152	91	51	28	4	X	X
6	NL	NL	158	91	55	18	1	X	NL	NL	NL	168	112	53	25	9
7	NL	NL	NL	NL	161	78	40	19	NL	NL	NL	NL	NL	148	88	54
8 and above	NL	NL	NL	NL	NL	189	111	69	NL	NL	NL	NL	NL	NL	198	133

For SI: 1 foot = 304.8 mm.

a. Fan airflow rating shall be in acordance with ANSI/AMCA 210-ANSI/ASHRAE 51.

b. For noncircular ducts, calculate the diameter as four times the cross-sectional area divided by the perimeter.

c. This table assumes that elbows are not used. Fifteen feet of allowable duct length shall be deducted for each elbow installed in the duct run.

d. NL = no limit on duct length of this size.

e. X = not allowed. Any length of duct of this size with assumed turns and fittings will exceed the rated pressure drop.

INTERNATIONAL CODE COUNCIL®
Copyright to, or licensed by, ICC (ALL RIGHTS RESERVED); accessed by Cindy Davis on Sep 19, 2014 2:08:21 PM pursuant to License Agreement. No further reproductions authorized.

TABLE M1507.3.3(1)
CONTINUOUS WHOLE-HOUSE MECHANICAL VENTILATION SYSTEM AIRFLOW RATE REQUIREMENTS

DWELLING UNIT FLOOR AREA (square feet)	NUMBER OF BEDROOMS				
	0 – 1	2 – 3	4 – 5	6 – 7	> 7
	Airflow in CFM				
< 1,500	30	45	60	75	90
1,501 – 3,000	45	60	75	90	105
3,001 – 4,500	60	75	90	105	120
4,501 – 6,000	75	90	105	120	135
6,001 – 7,500	90	105	120	135	150
> 7,500	105	120	135	150	165

For SI: 1 square foot = 0.0929 m^2, 1 cubic foot per minute = 0.0004719 m^3/s.

TABLE M1507.3.3(2)
INTERMITTENT WHOLE-HOUSE MECHANICAL VENTILATION RATE FACTORS[a, b]

RUN-TIME PERCENTAGE IN EACH 4-HOUR SEGMENT	25%	33%	50%	66%	75%	100%
Factor[a]	4	3	2	1.5	1.3	1.0

a. For ventilation system run time values between those given, the factors are permitted to be determined by interpolation.
b. Extrapolation beyond the table is prohibited.

M1507.4 Local exhaust rates. *Local exhaust* systems shall be designed to have the capacity to exhaust the minimum air flow rate determined in accordance with Table M1507.4.

TABLE M1507.4
MINIMUM REQUIRED LOCAL EXHAUST RATES FOR ONE- AND TWO-FAMILY DWELLINGS

AREA TO BE EXHAUSTED	EXHAUST RATES
Kitchens	100 cfm intermittent or 25 cfm continuous
Bathrooms-Toilet Rooms	Mechanical exhaust capacity of 50 cfm intermittent or 20 cfm continuous

For SI: 1 cubic foot per minute = 0.0004719 m^3/s.

INTERNATIONAL CODE COUNCIL®
Copyright to, or licensed by, ICC (ALL RIGHTS RESERVED); accessed by Cindy Davis on Sep 19, 2014 2:08:21 PM pursuant to License Agreement. No further reproductions authorized.

R301.2.1.1.1

Sunrooms

© pics721/Shutterstock.com.

Sunroom

CHANGE TYPE: Addition

CHANGE SUMMARY: The 2015 *International Residential Code* requires sunrooms to comply with AAMA/NPEA/NSA 2100-12. The standard contains requirements for habitable and nonhabitable sunrooms.

2015 CODE: **R301.2.1.1.1 Sunrooms.** Sunrooms shall comply with AAMA/NPEA/NSA 2100.

For the purpose of applying the criteria of AAMA/NPEA/NSA-2100 based on the intended use, sunrooms shall be identified as one of the following categories by the permit applicant, design professional, or the property owner in the construction documents. Component and cladding pressures shall be used for the design of elements that do not qualify as main wind force resisting systems. Main wind force resisting systems pressures shall be used for the design of elements assigned to provide support and stability for the overall sunroom.

Category I: A thermally isolated sunroom with walls that are open or enclosed with insect screening or 0.5 mm (20 mil) maximum thickness plastic film. The space is nonhabitable and unconditioned.

Category II: A thermally isolated sunroom with enclosed walls. The openings are enclosed with translucent or transparent plastic or glass. The space is nonhabitable and unconditioned.

Category III: A thermally isolated sunroom with enclosed walls. The openings are enclosed with translucent or transparent plastic or glass. The sunroom fenestration complies with additional requirements for air infiltration resistance and water-penetration resistance. The space is nonhabitable and unconditioned.

Category IV: A thermally isolated sunroom with enclosed walls. The sunroom is designed to be heated or cooled by a separate temperature control or system and is thermally isolated from the primary structure. The sunroom fenestration complies with additional requirements for water penetration resistance, air infiltration resistance, and thermal performance. The space is nonhabitable and conditioned.

Category V: A sunroom with enclosed walls. The sunroom is designed to be heated or cooled and is open to the main structure. The sunroom fenestration complies with additional requirements for water-penetration resistance, air infiltration resistance, and thermal performance. The space is habitable and conditioned.

CHANGE SIGNIFICANCE: The 2012 *International Residential Code* defined a sunroom as "A one-story structure attached to a dwelling with a glazing area in excess of 40 percent of the gross area of the structure's exterior walls and roof." These structures were typically constructed in one of two manners:

1. Using typical wood framing techniques.
2. Using a stick system that consists of prefabricated framing of aluminum, fiberglass, wood, or other materials, with glass or opaque wall or roof panels, and steel or aluminum connections.

Using the 2012 IRC, the first technique was done in accordance with the provisions of the IRC for wood framed construction. There were no provisions for the second method of constructing a sunroom other than by engineering analysis or demonstrating equivalence to the current provisions of the *International Residential Code*.

By adding reference to the provisions of AAMA/NPEA/NSA 2100-12 *Specifications for Sunrooms* to the IRC, prescriptive construction is easier. Sunrooms designed and constructed in accordance with AAMA/NPEA/NSA 2100 are required within the standard to meet the structural provisions of the IRC or IBC. In addition, the standard establishes specific requirements for these structures based upon their designated category.

AAMA/NPEA/NSA 2100 was first published in 2002 by the American Architectural Manufacturers Association (AAMA), the National Sunroom Association (NSA), and the National Patio Enclosure Association (NPEA). It is the first U.S. standard for the design and specification of sunrooms. The standard creates five categories of sunrooms based upon intended use of the space. Specific design and performance criteria based on end use were added to the standard.

The standard was later revised to meet the requirements of AAMA/WDMA/CSA 101/I.S.2/A440 for the design, testing, and labeling of windows, glass doors, and skylights, and the foundation requirements of the *International Residential Code*.

AAMA/NPEA/NSA 2100, and the five categories of sunrooms it establishes, clarifies criteria for sunrooms with regard to egress, natural ventilation, and resistance of the exterior envelop to air leakage and water penetration.

R311.1

Means of Egress

CHANGE TYPE: Clarification

CHANGE SUMMARY: The required egress door of a dwelling unit must open directly into a public way or to a yard or court that opens to a public way.

2015 CODE: **R311.1 Means of Egress.** ~~All d~~Dwellings shall be provided with a means of egress ~~as provided~~ in accordance with this section. The means of egress shall provide a continuous and unobstructed path of vertical and horizontal egress travel from all portions of the dwelling to the ~~exterior of the dwelling at the~~ required egress door without requiring travel through a garage. The required egress door shall open directly into a public way or to a yard or court that opens to a public way.

CHANGE SIGNIFICANCE: Proponents of this change reasoned that the means of egress should not have less restrictive requirements than those for emergency escape and rescue openings, which are required to open to a public way or to a yard or court that leads to a public way. The new language is consistent with Section R310.1. In practice, almost all new homes exit to a yard that has access to a public sidewalk or street, and this clarification to the code is not likely to impact construction.

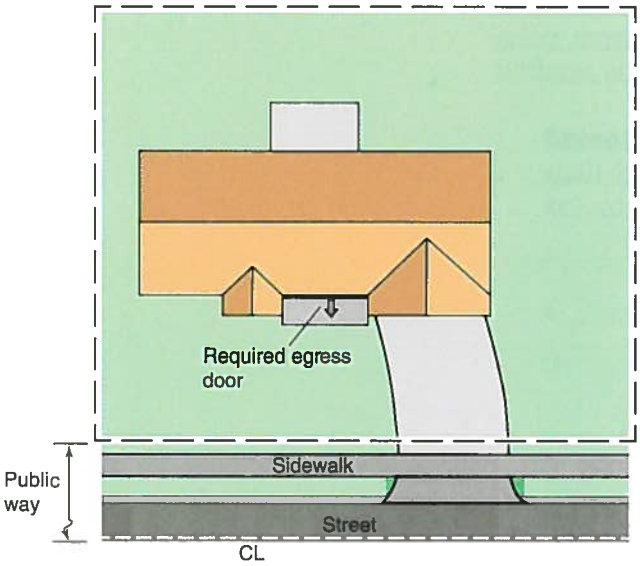

International Code Council®

The required egress door must have access to a public way.

© Lindasi99/Shutterstock.com

Dwelling with front-yard access to a public way

From: Foley, Brian
To: Hodge, Vernon (DHCD); "Allen, Bob"
Cc: Davis, Cindy (DHCD); Negley, Valrae (DHCD); Snidow, Chris; "CHARLES BAJNAI"
Subject: RE: Stem Walls, Virginia Residential Code
Date: Tuesday, April 26, 2016 7:20:40 AM
Attachments: image001.jpg

Bob,

It was always our intention to continue this exception to be added to the Virginia version of the IRC. This is an oversight no one has noticed until now. We actually still teach it in our state training as if it's still in the code.

My suggestion would be to permit it as an equivalent to the spirit and intent of the provisions as written.

We will work with Vernon to ensure this gets into the 2015 version.

Cheers,

Brian

From: Hodge, Vernon (DHCD) [mailto:Vernon.Hodge@dhcd.virginia.gov]
Sent: Monday, April 25, 2016 9:56 AM
To: 'Allen, Bob' <all56@henrico.us>
Cc: Davis, Cindy (DHCD) <Cindy.Davis@dhcd.virginia.gov>; Negley, Valrae (DHCD) <Valrae.Negley@dhcd.virginia.gov>; Snidow, Chris <sni@henrico.us>; 'CHARLES BAJNAI' <BajnaiC@chesterfield.gov>; Foley, Brian <Brian.Foley@fairfaxcounty.gov>
Subject: RE: Stem Walls, Virginia Residential Code

Bob,

I have copied Brian Foley as well; hopefully either he or Chuck will respond. Have you checked R602.12 to see how it addresses stem wall anchoring. If that doesn't help, I don't know that you would have to issue modifications. It's just an alternative method, subject to approval under Section 112.2.

Vernon

From: Allen, Bob [mailto:all56@henrico.us]
Sent: Monday, April 25, 2016 9:37 AM
To: Hodge, Vernon (DHCD)
Cc: Davis, Cindy (DHCD); Negley, Valrae (DHCD); Snidow, Chris; 'CHARLES BAJNAI'
Subject: RE: Stem Walls, Virginia Residential Code

Not good. Without that exception, we have lost the one practical method that contractors have used (and continue to use!) for doing the reinforced stem walls.

To refresh your memory, this is what was dropped. I guess if we are continuing to allow this, we would be back to allowing epoxied anchoring of reinforced stem walls, it would have to be by modification.

--Bob

R602.10.9 Braced wall panel support. Braced wall panel support shall be provided as follows:
1. Cantilevered floor joists complying with Section R502.3.3 shall be permitted to support braced wall panels.
2. Elevated post or pier foundations supporting braced wall panels shall be designed in accordance with accepted engineering practice.
3. Masonry stem walls less than 48 inches (1220 mm) in length that support braced wall panels shall be reinforced in accordance with Figure R602.10.9. Masonry stem walls with a length
greater than or equal to 48 inches (1220 mm) supporting braced wall panels shall be constructed in accordance with Section R403.1. Methods ABW and PFH shall not be permitted to attach to masonry stem walls.
4. Concrete stem walls less than 48 inches (1220 mm) in length, greater than 12 inches (305 mm) tall and less than 6 inches (152 mm) thick shall have reinforcement sized and located in accordance with Figure R602.10.9.

Exception: As an alternative to the Optional Stem Wall Reinforcement in Fig. R602.10.9, an approved post-installed adhesive anchoring system shall be permitted. A minimum of two anchors shall be installed as indicated in Figure R602.10.9. Anchors shall be located not more than 4 inches (102 mm) from each end of the stem wall. Anchors shall be installed into the concrete footing as follows:
1. 5/8 inch (16 mm) threaded rod – 3/4 inch (19 mm) diameter hole with a minimum embedment of 6 inches (152 mm).
2. No. 4 reinforcing bar – 5/8 inch (16 mm) diameter hole with a minimum embedment of 4 1/2 inches (114 mm).
A minimum footing thickness of 8 inches (203 mm) is required and the minimum distance from each anchor to the edge of the footing shall be 3 3/4 (95 mm). The anchoring adhesive and anchors shall be installed in accordance with the manufacturer's instructions and have a minimum tensile capacity of 5,000 lbs (22 kN).

From: Hodge, Vernon (DHCD) [mailto:Vernon.Hodge@dhcd.virginia.gov]
Sent: Monday, April 25, 2016 9:01 AM
To: Allen, Bob <all56@henrico.us>
Cc: Davis, Cindy (DHCD) <Cindy.Davis@dhcd.virginia.gov>; Negley, Valrae (DHCD) <Valrae.Negley@dhcd.virginia.gov>
Subject: RE: Stem Walls, Virginia Residential Code

Hey Bob,

I'm out at the ICC hearings in Louisville and don't have a 2009 IRC to verify whether that exception was a state amendment, or whether it was in the 2009 IRC, but I think a history of what's happened with the wall bracing provisions will answer your question.

Virginia developed its own wall bracing provisions independent of what was happening at the national level, but then the group that worked on the Virginia provisions attempted to get them into the IRC at the national level. What came out of all that was the new Section R602.12 (Practical wall bracing). When that was developed, most of the changes to the regular wall bracing provisions we were using were dropped to use the 2012 IRC provisions as written. The code gave the choice of either using the practical wall bracing provisions or the regular ones (R602.10).

So that's the why. Now how the practical wall bracing provisions address the same subject matter and whether using those provisions will work for the designer; I'll leave that up to you all since the IRC language is not readily available to me out here. But if you need us to look into it further when I get back, just let me know.

Vernon

From: Allen, Bob [mailto:all56@henrico.us]
Sent: Monday, April 25, 2016 8:32 AM
To: Hodge, Vernon (DHCD)
Subject: Stem Walls, Virginia Residential Code

It's funny how long it sometime takes to notice these things. We just had a question from a designer about the exception to R602.10.9. That exception was in the 2009 edition but seems absent from the 2012. I could not find an errata for that section. Is there an explanation for that?

Bob Allen
Residential Plan Reviewer
Building Construction and Inspections
County of Henrico

Tel: 804.501.4686
email: bob.allen@henrico.us